chanhvinh.com

DCF-S-0033-1(95.5)

Japan Aviation Electronics Industry, Ltd. Precision Manufacturing Equipment Division				Number	T700221E		Page 1/8
Spec:				Original issued: Dec. 6, 2000			
TITLE: Operation Manual for CT150-4C-FIX CT150-4C-F1A				Rev.	Date	CN-No.	Prep	Chkd	Appd
ISSUED: Production Equipment & Tooling Dept.									
Prepared	Checked	Approved	Approved						
F.Kawano	K.Koide	A.Iwasaki	[illegible]						

CAUTION

- Be sure to read this manual before operation since all safety precautions are described in this manual.
- Properly keep this operation manual near the tool so that anyone can refer to them at anytime.
- Be sure to use the hand tool by following the instructions given in this operation manual. Otherwise, we will not be responsible for any accidents that may result.

This Hand crimping tool is used for crimping stripped wires to contacts. To obtain excellent crimped wires, be sure to read this manual carefully in order to fully understand this tool and operate it correctly.

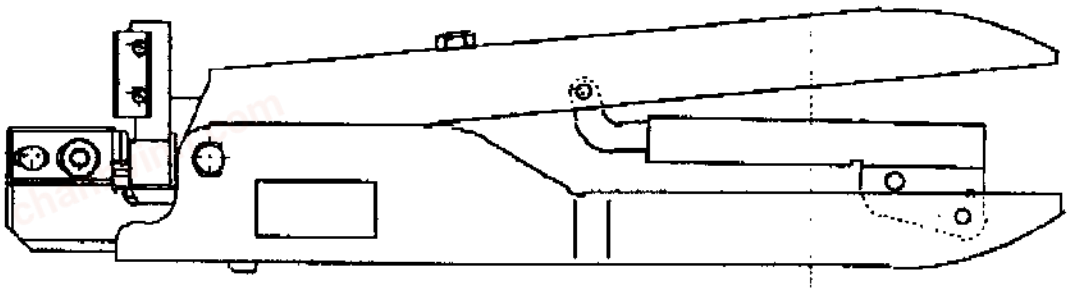

参 考 用
製作用に使用不可
用済後要返却
コネクタ技術管理

JAE Connector Div. Proprietary.
Copyright© Japan Aviation Electronics Industry Ltd.

chanhvinh.com

Important Safeguards and Precautions

DANGER Pinch Points

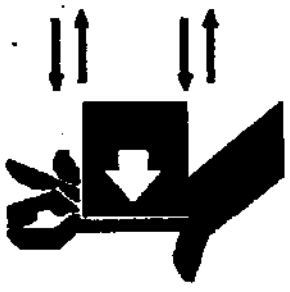

The crimper moves OPEN/CLOSE.
NEVER put fingers into opening between the crimper and anvil.

About caution symbols: In this manual and on our products as well, the following caution symbols are used to show important information and warnings for correct use of our products. This is to avoid possible personal injury and property damage. Be sure to read and understand these special instructions before proceeding to the procedural details.

DANGER	: A danger indicates an operation that results in serious personal injury or fatal wound if precautions are not followed.
WARNING	: A warning indicates an operation that could cause serious personal injury or fatal wound if precautions are not followed.
CAUTION	: A caution indicates an operation that could cause personal injury or equipment damage if precautions are not followed.

Examples of caution symbols:



An equilateral triangle △ serves the same as CAUTION (or DANGER and WARNING).
It contains a specific warning information inside (the lightning flash with arrowhead symbol shown left means a risk of electric shock to persons).



A no entry mark ⃠ indicates an action that must be prohibited. Inside or near it is indicated a special instruction (the label shown left means prohibition of disassembly).



A black circle ● indicates a required action that must be proceeded without failure. It contains specific instructions inside (the label shown left means required disconnection of a plug from an outlet).

chanhvinh.com

1. Tool Name

CT150-4C-FIX

CT150-4C-FIA

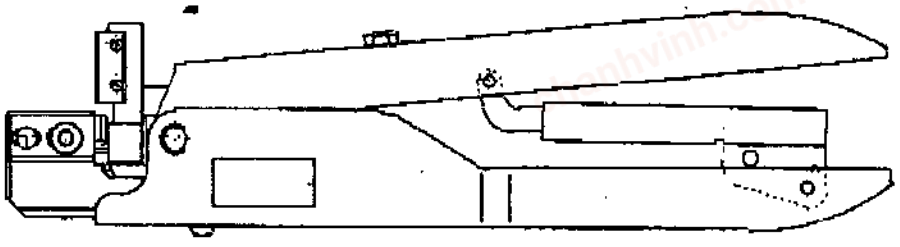

2. Notes on Handling this Tool

① Do not crimp other than specified contacts and wires.

② To keep this tool in good working condition for a long period of time, always keep it clean and handle it with care. Avoid dropping or handling it roughly.

③ The handle is adjusted so that the claw of ratchet is released when crimping is completed. Do not release the handle before crimping is completed.

④ It is not necessary to lubricate the crimper or anvil.

⑤When using this tool, be sure to check that the contact crimp height meets the specified conditions.

⑥This tool has two crimping sections, so select a proper one taking wire size into account. (It is one cavity on FIA insulation crimper)

3. Part names and configuration

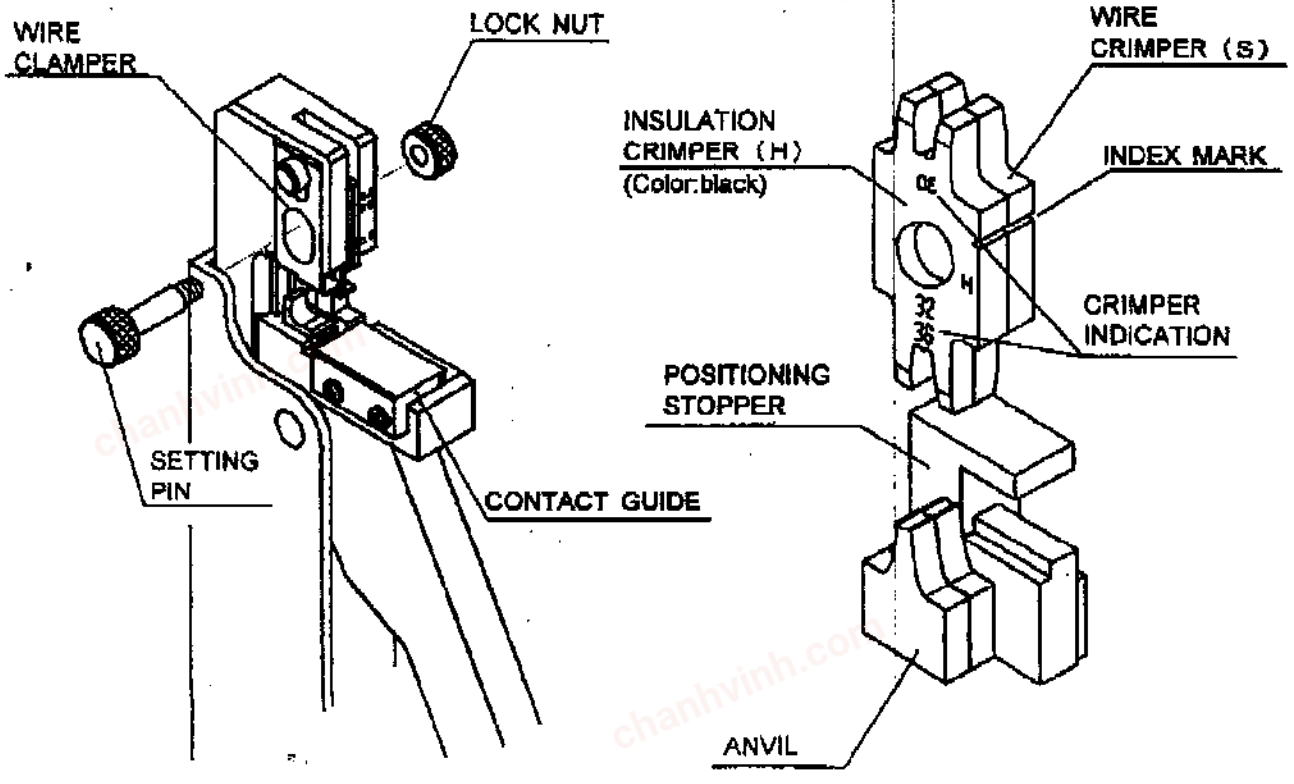

chanhvinh.com

4. Preoperation

4-1 Striping wire

Strip the specified length of insulation off each wire first. At this time, check that no cuts or flaws exist in the conductor and correct any disarrangement of the wire ends before starting to crimp.

4-2 Setting up Crimper

①Handles Release

Before inserting a contact into the tool, release the handle. The contact cannot be inserted if the handle is not released. To release the handle, grip it tightly until the ratchet is release.

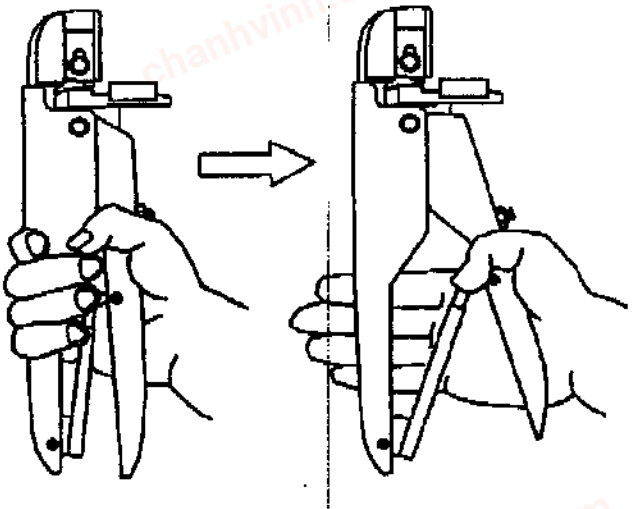

②Setting up Crimper

The wire crimper have two kinds of crimp cavities up and down sides.

Set it up according to the applicable wire.(see Table Ⅱ)

Caution: Set up the wire crimper and the insulation crimper together with the wire size of the wire crimper indication out side.

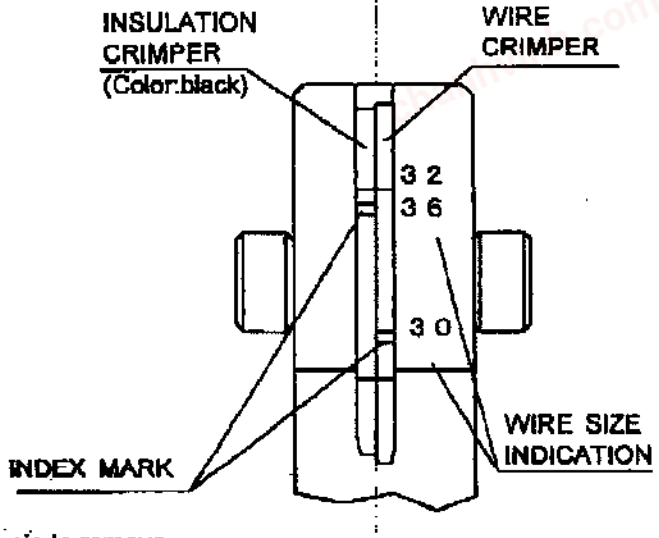

③Check The Crimper Setting

Make sure to put the marks of the wire crimper and insulation crimper together.

④Changing Wire Crimper

Unscrew the lock nut and take off the setting pin to remove the wire crimper and the insulation crimper.

Fix the appropriate side of the wire crimper in the tool body for the applicable wire before operating this tool.

Make sure the procedure of setting up the wire crimper and insulation crimper or their tops.

Set up the Insulation crimper (color:black) in front side of this tool.

Set up the index mark(Insulation crimper"H"&wire size, Wire crimper"S"&wire size)is outside of this tool.

Insert the setting pin into the wire clamper and the tool body.

Then fasten the lock nut.

(Lock nut is able to fasten manually)

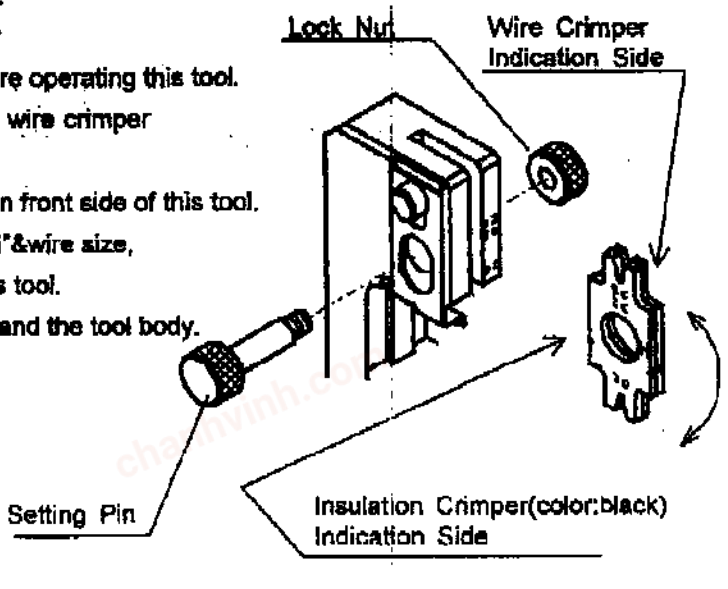

chanhvinh.com

4-3 Setting up contact

Install the insulation barrel of the reel contact which is cut about 100mm to 150mm into the contact guide until the contact side touches the positioning stopper.

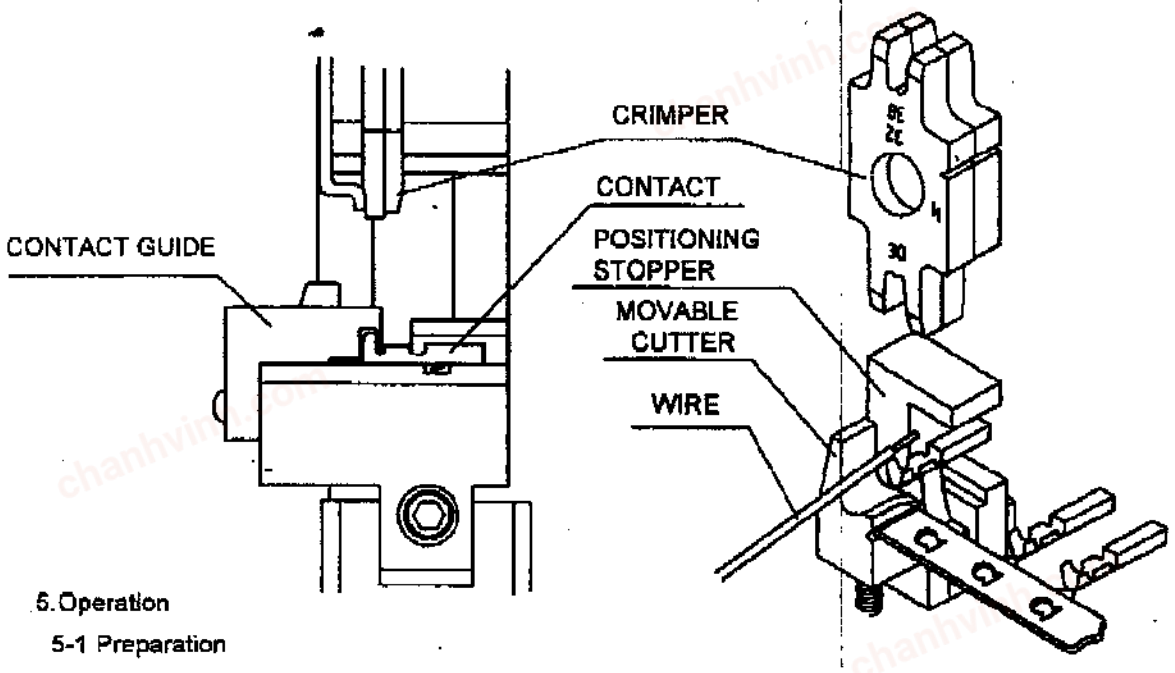

5. Operation

5-1 Preparation

Insert the conductor into the opening space between crimpers and anvil, and put the wire on the cutter. Then strike the tip of it slightly against the positioning stopper. It may happen that the tip of wire strikes too strongly against the positioning stopper and the crimping become rejected with bending it.

To maintain the situation, make sure to crimp with the wire being set on the anvil.

5-2Crimping

Squeeze the handle gradually to the stroke end with holding the wire in place.

Then, crimping is done and the ratchet is released.

CAUTION

- **The crimper moves OPEN/CLOSE.**
- **NEVER put fingers into opening between the crimper and anvil.**

chanhvinh.com

5-3Taking out the product

After crimping, the handle shall be let back to the opening position of itself, and take out the product that is crimped contact with wire.

Note: When you repeat crimping with same size cable, shift the contact by one pitch with hand, and operate in accordance with the above procedure (paragraph 4-1 thru 4-3).

6.Check of crimped contact

The following are general criteria of crimped contacts. Other criteria are as per the specification of each contact.

●Correctly crimped contact

- The tip of a conductor has been placed outside the conductor barrel.
- The insulation has been wound inside the insulation barrel.
- The insulation has not been caught in the conductor barrel.
- The crimped surface has not been excessively rough.
- Bell-mouth(not crimped part)is formed.
- The conductor has not been projected from the barrel.

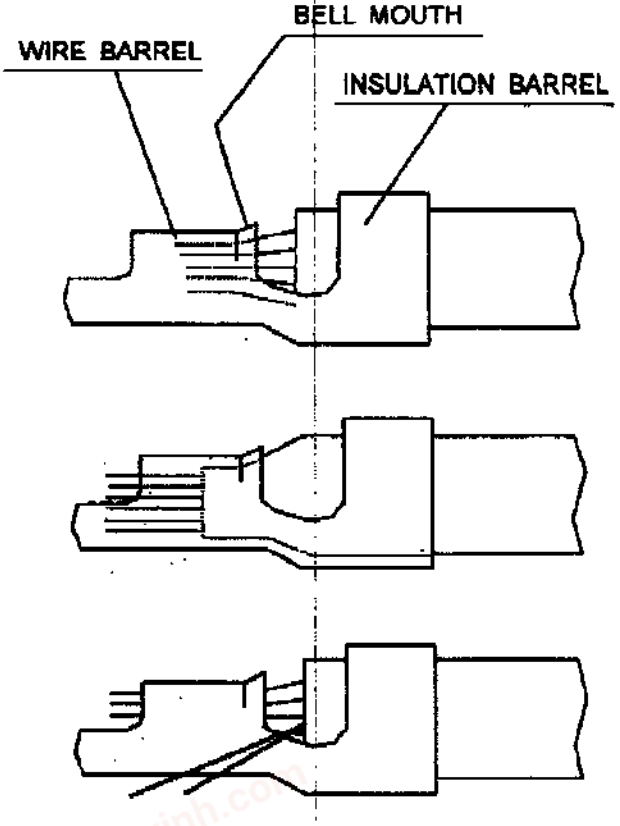

●Defective crimped contact

- Insufficient insertion (The conductor has not been inserted completely in the conductor barrel.)
- Insufficient stripping (Since the insulation has not been stripped as long as specified, the insulation has been inserted in the conductor barrel.)
- Disordered conductor (The conductor has been projected outside the contact crimping barrel.)

chanhvinh.com

7.Check of crimp height

When this tool is delivered, the crimp height has already been adjusted.

However, it may be due to the use for a long time that they can be out of adjustment.

8.Applicable contact and cable and tool description

Table I (Dimension : mm)

Applicable Contact	Applicable Wire		
	Cable Size (AWG#)	Stranding	Outside Diameter of Insulation
FI-XC3-1-15000	30 32 36	Stranded 7 conductors	φ0.45～φ0.75
FI-AC3-1-15000	30 32 36	Stranded 7 conductors	Less than φ0.5

Table II (Dimension : mm)

CT150-4C-FIX

Applicable Contact	Applicable Wire			Tool Indication		Standard for crimp height	
	Wire Size (AWG#)	Outside Diameter of Insulation	Stripped Length	Wire Crimper	Ins. Crimper	Conductor ±0.02	Insulation ±0.1
FI-XC3-1-15000	30	φ0.6～φ0.75	1.3～1.7	30	30	0.43	0.9
		φ0.45～φ0.6			32 36		0.7
	32～36	φ0.6～φ0.75		32 36	30	0.39	0.9
		φ0.45～φ0.6			32 36		0.7

CT150-4C-FIA

Applicable Contact	Applicable Wire			Tool Indication		Standard for crimp height	
	Wire Size (AWG#)	Outside Diameter of Insulation	Stripped Length	Wire Crimper	Ins. Crimper	Conductor ±0.02	Insulation ±0.05
FI-AC3-1-15000	30	Less than φ0.5	1.3～1.7	30	—	0.43	0.5
	32～36	Less than φ0.5		32・36	—	0.39	0.5

Note 1.Select wire and insulation crimper according to applicable cable size.

(It is one cavity on FIA Insulation crimper)

Note 2.Aplicable wire is standerd 7 conductors. Using not specified wire,please ask us whether the Wier is usable or not.

chanhvinh.com

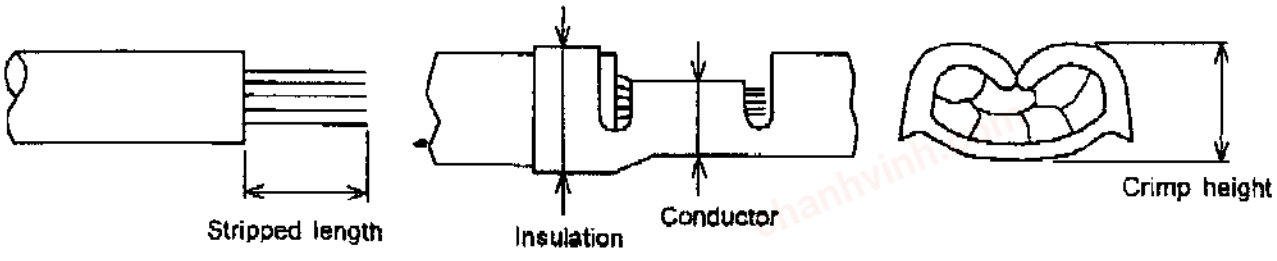

Note 3.The diffarence between the CT150-4C-FIX and CT150-4C-FIA is Insulation crimper only.
Subsequently, the FIX and FIA are interchangeble by changing the Insulation crimper.
The FI-AC3-1 can be crimped by the CT150-4C-FIX(for FI-XC3-1) which has the FIA Insulation crimper.
And vice versa : the FIX Insulation crimper enables the CT150-4C-FIA(for FI-AC3-1) to crimp the FI-XC3-1.
You may purchase Insulation crimper separately.(see the following chart)

Description	Parts number
FIX Insulation crimper	725-00221-102 (Indication "FIX")
FIA Insulation crimper	725-00225-102 (Indication "FIA")

9. Crimp Strength

The tensile strength when the conductor part of a wire is crimped is the crimping strength. When crimping is done accurately with this tool, the crimping strength meets the specifications shown in the table blow:

Wire Size(AWG)	#36	#32	#30
Crimping Strength	1.9N	5.8N	9.8N