chanhvinh.com

ITW Switches

SERIES H48M - 19MM PANEL SEALED 10 AMP METAL PUSHBUTTONS

These rugged electromechanical pushbuttons are available in stainless steel or zinc alloy housings and come in momentary or maintained action.

Lighting options include center spot, or ring illumination. This 19mm size make the H48M ideal for many applications in the transportation, security, food processing and medical markets.

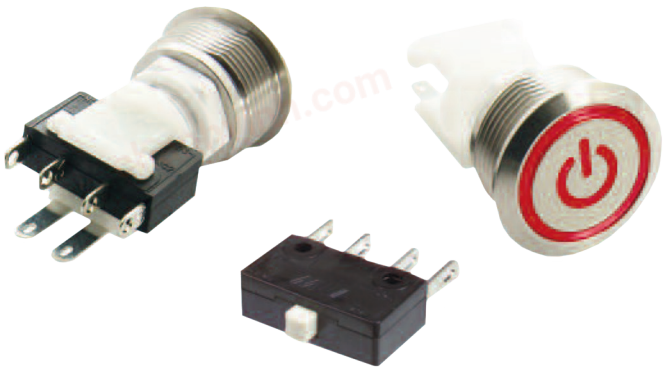

APPLICATIONS:

- Outdoor Controls
- Security Equipment
- Medical Equipment
- Food Processing Equipment
- Military Equipment
- Industrial Machinery
- Transportation: Mass-Transit, Lift Trucks

KEY FEATURES:

- Momentary or Maintained Action
- Stainless Steel Housing
- Center Spot or Ring Illumination
- Variety of LED colors
- Electro-Mechanical
- Panel Sealed to IP67
- ROHS Compliant
- Works with:

  16-4042 Snap Action switch (UL and CSA Certified): SPDT Form Z, Silver contacts

  16-530004 QC Terminal, SPDT Form Z, Silver contacts

ORDERING INFORMATION:

Switch Function:	Housing Material:	Button Style:	Led Colour:	Voltage Resistor: If Blank*/$	Switch#:
1 Mechanical, Momentary	**1** Stainless Steel	**0** Non-Lit	**N** None	**05** 5V Forward	
2 Mechanical, Maintained		**1** Center Spot	**G** Green		
		2 Ring Illumination	**R** Red		
		3 Standby / Power	**A** Amber		
			B Blue		
			W White		
			Y Yellow		
			RB Red/Blue		
			RG Red/Green		

H48M- [ ] [ ] [ ] [ ] [ ]

* Current limiting resistor maybe required to limit LED forward current to 20mA (not included)
$ Other integrated LED voltages can be provided upon request depending on project volume
# Approved switches for use are the 16-4042 and 16-530004

LED forward voltage: – Red, Amber & Yellow: 2 V / Green, Blue & White: 3.4 V

chanhvinh.com

SERIES H48M: 19MM PANEL SEALED 10 AMP PUSHBUTTON

PRODUCT DRAWINGS

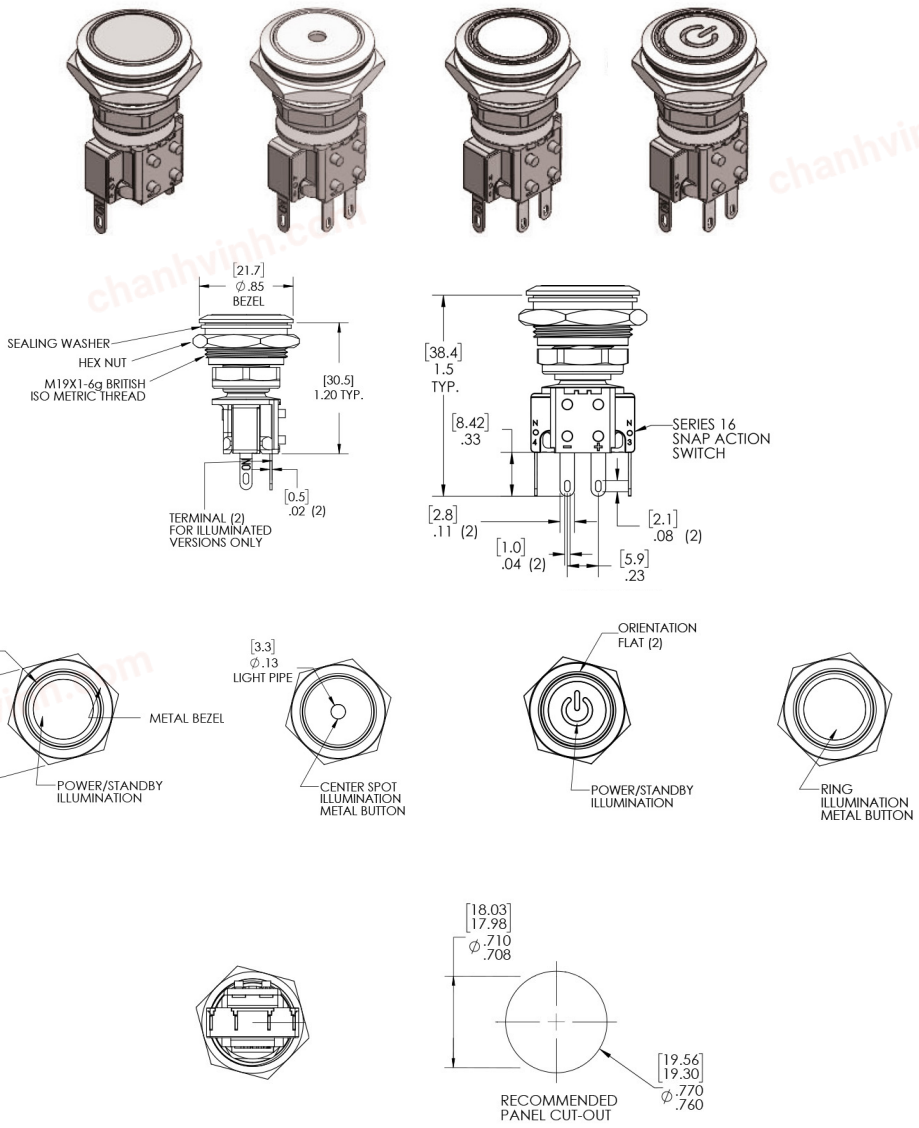

MECHANICAL / ELECTRICAL CHARACTERISTICS:

Circuit:
SPDT-DB (Form Z)

Button travel (nominal):
0.09 inches (2.3mm)

Operating force (nominal):
5.2N (520 grams)

Contact bounce (nominal):
1 millisecond

Panel thickness:
0.020"– 0.177" (0.5 – 4.5 mm)

Temperature index:
-40° C to +85° C (momentary)
-40° C to +65° C (maintained)

Torque (max):
10 inch pounds

LED operating temperature:
-13° F to +185° F
(-25° C to +85° C)

Current ratings#:
10A @ 125/250 VAC (res)
10A @ 28 VDC (ind)

Actuator life (nominal):
500,000 cycles (momentary)
50,000 cycles (maintained)

ELECTRO-MECHANICAL

Dielectric strength:
1,000 VAC

Insulation Resistance:
1GΩ

Contact Resistance:
50 mΩ max (initial)

LED SPECIFICATIONS

LED CODE	LED		CIRCUITRY	Vf (VDC)		If (mA)
	Colour 1	Colour 2		Colour 1	Colour 2	
A	AMBER	-		1.6~2.0	-	20
R	RED	-		1.6~2.0	-	20
Y	YELLOW	-		1.6~2.0	-	20
B	BLUE	-		2.8~3.4	-	20
G	GREEN	-		2.8~3.4	-	20
W	WHITE	-		2.8~3.4	-	20
RB	RED	BLUE		1.6~2.0	2.8~3.4	20
RG	RED	GREEN		1.6~2.0	2.8~3.4	20

Notes
1: Lead Soldering Temperature (4mm from Body): 280°C for 5 seconds
2: Hand Soldering Temperature (4mm from Body): 320°C for 3 seconds

PANEL-MOUNTING INFORMATION

The series H48M mounts easily into panels of minimum 0.020" (0.5 mm) and maximum 0.177" (4.5 mm) thickness. Front panel sealing to IP67 is achieved by a sealing o-ring fitted to the body of the switch before it is inserted into the panel hole cut-out. It is held onto the panel by means of a metal hex nut tightened down to a torque of 10 inch pounds to achieve the correct sealing pressure. The Basic Switch (16-4042) has to be installed after the pushbutton actuator is firmly secured to specified torque onto the panel.

Copyright © 2025, ITW Switches 10/2025

Designs and specifications are subject to change without notice to product improvement.

ITW Switches
www.itwswitches.com