chanhvinh.com

ISP815X, ISP825X, ISP845X
ISP815, ISP825, ISP845

HIGH DENSITY MOUNTING PHOTODARLINGTON OPTICALLY COUPLED ISOLATORS

ROHS COMPLIANT

APPROVALS

- UL recognised, File No. E91231
  Package Code FF

'X' SPECIFICATION APPROVALS

- VDE 0884 in 3 available lead form : -
  - STD
  - G form
  - SMD approved to CECC 00802
- Certified to EN60950 by
  Nemko - Certificate No. P01102465

DESCRIPTION

The ISP815, ISP825, ISP845 series of optically coupled isolators consist of infrared light emitting diodes and NPN silicon photodarlingtons in space efficient dual in line plastic packages.

FEATURES

- Options :-
  10mm lead spread - add G after part no.
  Surface mount - add SM after part no.
  Tape&reel - add SMT&R after part no.
- High Current Transfer Ratio (600%min)
- High Isolation Voltage (5.3kV$_{RMS}$,7.5kV$_{PK}$)
- All electrical parameters 100% tested
- Custom electrical selections available

APPLICATIONS

- Computer terminals
- Industrial systems controllers
- Measuring instruments
- Signal transmission between systems of different potentials and impedances

ISP815X
ISP815

Dimensions in mm

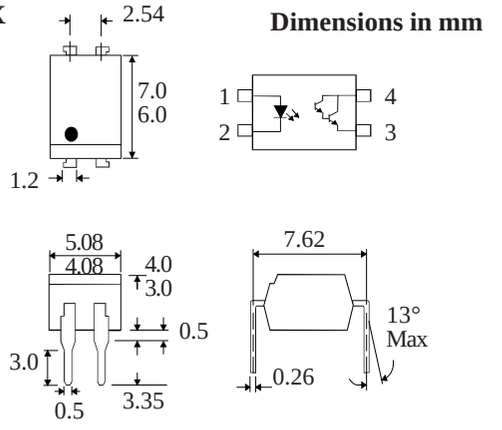

ISP825X
ISP825

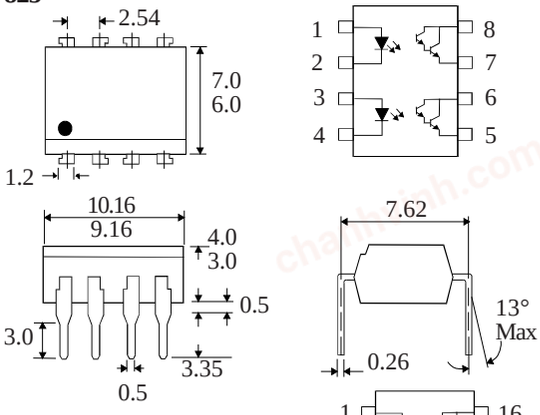

ISP845X
ISP845

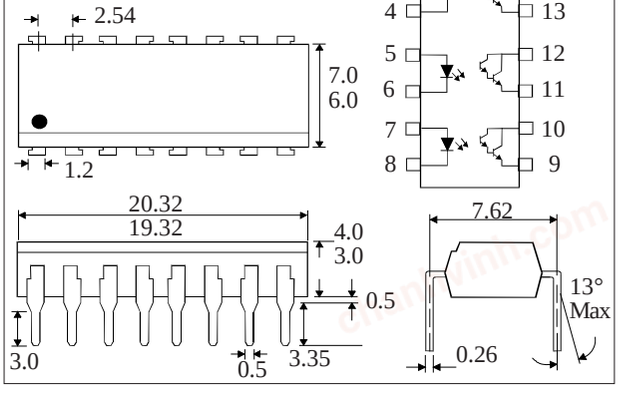

OPTION SM
SURFACE MOUNT

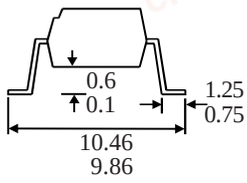

OPTION G

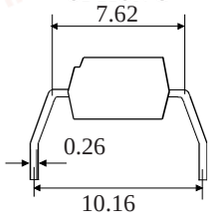

ISOCOM COMPONENTS LTD
Unit 25B, Park View Road West,
Park View Industrial Estate, Brenda Road
Hartlepool, Cleveland, TS25 1UD
Tel: (01429) 863609 Fax :(01429) 863581

chanhvinh.com

ABSOLUTE MAXIMUM RATINGS
(25°C unless otherwise specified)

Storage Temperature	-55°C to + 125°C
Operating Temperature	-30°C to + 100°C
Lead Soldering Temperature (1/16 inch (1.6mm) from case for 10 secs)	260°C

INPUT DIODE

Forward Current	50mA
Reverse Voltage	6V
Power Dissipation	70mW

OUTPUT TRANSISTOR

Collector-emitter Voltage BV_{CEO}	35V
Emitter-collector Voltage BV_{ECO}	6V
Collector Current	80mA
Power Dissipation	150mW

POWER DISSIPATION

Total Power Dissipation	200mW
(derate linearly 2.67mW/°C above 25°C)	

ELECTRICAL CHARACTERISTICS (T_A = 25°C Unless otherwise noted)

PARAMETER		MIN	TYP	MAX	UNITS	TEST CONDITION
Input	Forward Voltage (V_F)		1.2	1.4	V	I_F = 20mA
	Reverse Current (I_R)			10	µA	V_R = 4V
Output	Collector-emitter Breakdown (BV_{CEO}) (Note 2)	35			V	I_C = 1mA
	Emitter-collector Breakdown (BV_{ECO})	6			V	I_E = 100µA
	Collector-emitter Dark Current (I_{CEO})			100	nA	V_{CE} = 20V
Coupled	Current Transfer Ratio (CTR) (Note 2)	600		7500	%	1mA I_F, 2V V_{CE}
	Collector-emitter Saturation Voltage $V_{CE(SAT)}$			1.0	V	20mA I_F, 5mA I_C
	Input to Output Isolation Voltage V_{ISO}	5300 7500			V_{RMS} V_{PK}	See note 1 See note 1
	Input-output Isolation Resistance R_{ISO}	$5x10^{10}$			Ω	V_{IO} = 500V (note 1)
	Output Rise Time tr Output Fall Time tf		60 53	300 250	µs µs	V_{CE} = 2V, I_C = 10mA, R_L = 100Ω

Note 1 Measured with input leads shorted together and output leads shorted together.
Note 2 Special Selections are available on request. Please consult the factory.

chanhvinh.com

Collector Power Dissipation vs. Ambient Temperature

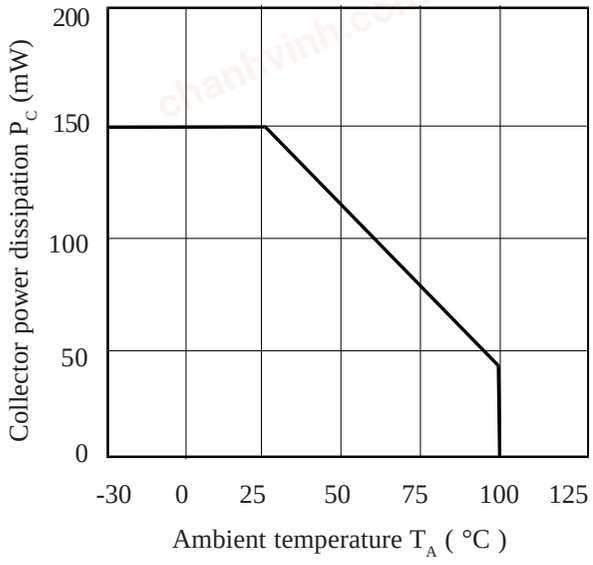

Collector-emitter Saturation Voltage vs. Forward Current

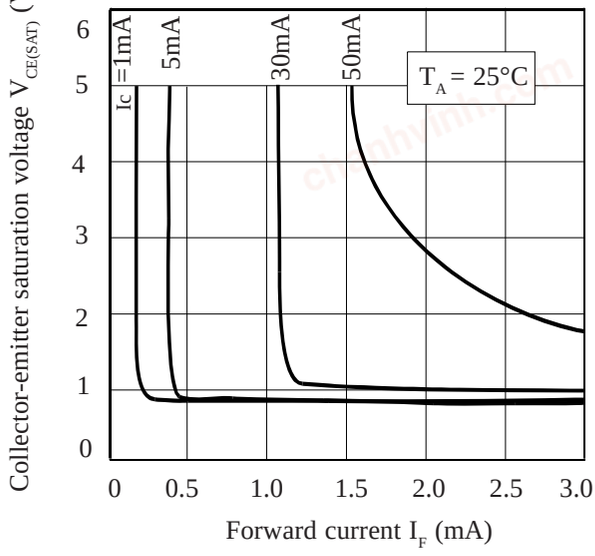

Forward Current vs. Ambient Temperature

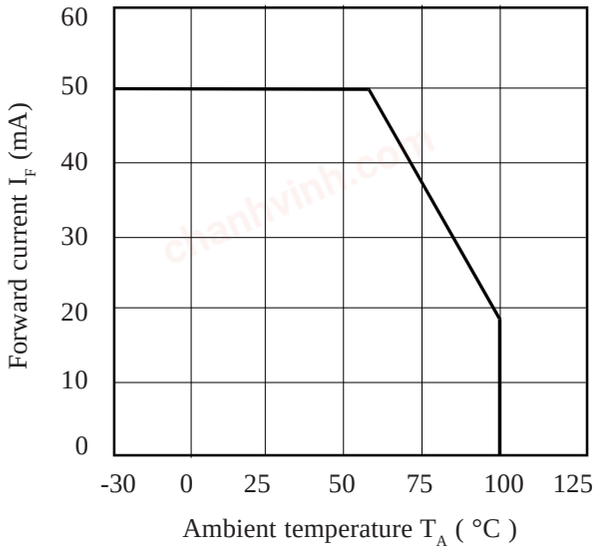

Collector Current vs. Collector-emitter Voltage

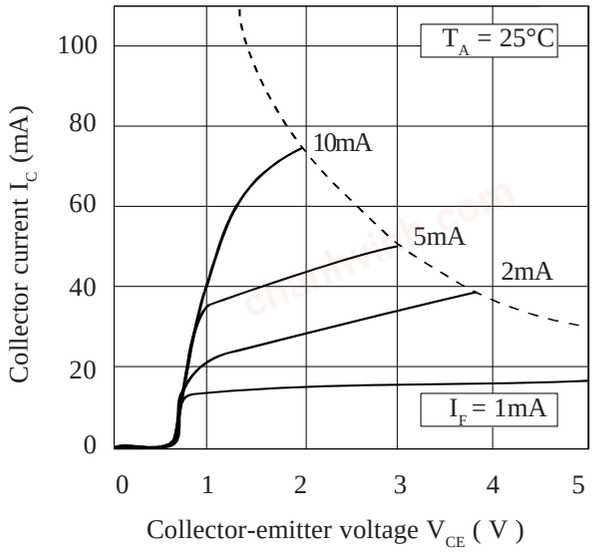

Collector-emitter Saturation Voltage vs. Ambient Temperature

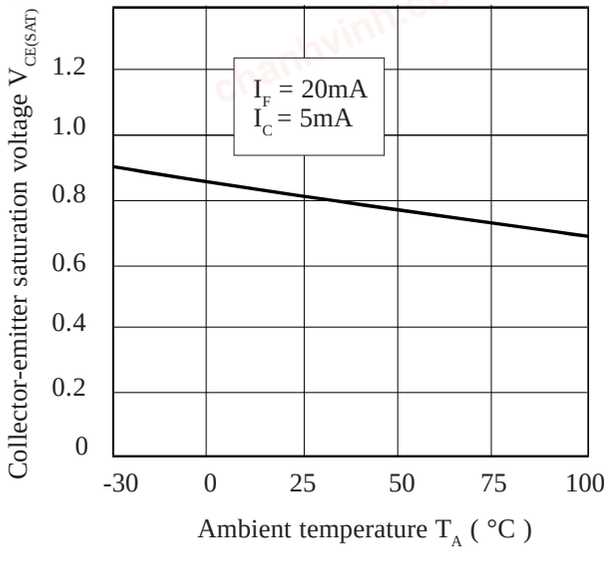

Relative Current Transfer Ratio vs. Ambient Temperature

