chanhvinh.com

# TLE5014




## Features

- **G**iant **M**agneto **R**esistance (GMR)-based principle
- Integrated magnetic field sensing for angle measurement
- 360° angle measurement
- High voltage and reverse polarity capability
- EEPROM for storage of configuration (e.g. zero angle) and customer specific ID
- 12 bit representation of absolute angle value on the output
- Max. 1° angle error over lifetime and temperature range
- Developed according to ISO26262 with process complying to ASIL-D
- Internal safety mechanisms with a SPFM > 97%
- Interfaces: PWM, SPC, SENT (based on SAE J2716-2010)
- 32 point look-up table to correct for systematic angle errors (e.g. magnetic circuit)
- 112 bit customer ID (programmable)
- Automotive qualified Q100, Grade 1: -40°C to 125°C (ambient temperature)
- ESD: 4kV (HBM) on $V_{DD}$ and output pin
- RoHS compliant and halogen free package

### Functional Safety

- Safety Manual and Safety Analysis Summary Report available on request

## Applications

The TLE5014 GMR-based angle sensor is designed for angular position sensing in automotive applications with focus on steering angle sensor.

## Description

**Table 0-1 Derivative Ordering codes (see Chapter 6 for description of derivatives)**

| Product Type | Marking | Ordering Code | Package | Comment |
|---|---|---|---|---|
| TLE5014P16 | 014P | SP001231814 | PG-TDSO-16 | PWM Interface |
| TLE5014S16 | 014S | SP001231818 | PG-TDSO-16 | SENT Interface |
| TLE5014C16 | 014C | SP001231806 | PG-TDSO-16 | SPC Interface |

chanhvinh.com



# Table of Contents


**1 Functional Description ..... 6**
1.1 Block Diagram 6
1.2 Functional Block Description 6
1.3 Sensing Principle 7
1.4 Pin Configuration 9
1.5 Pin Description 9

**2 Application Circuits ..... 10**

**3 Specification ..... 12**
3.1 Absolute Maximum Ratings 12
3.2 Operating Range 13
3.3 Electrical Characteristics 15
3.3.1 Input/Output Characteristics ..... 15
3.3.2 ESD Protection ..... 19
3.3.3 Angle Performance ..... 20
3.4 EEPROM Memory 21
3.5 Reset Concept and Fault Monitoring 21
3.6 External & Internal Faults 21
3.7 Power Dissipation 22
3.8 Device Programming (SICI Interface) 22

**4 Interfaces ..... 24**
4.1 Sensor Output Driver 24
4.2 Pulse Width Modulation (PWM) Interface 24
4.3 Short PWM Code (SPC) 26
4.3.1 Master Trigger Pulse Requirements ..... 27
4.3.2 SPC Features ..... 30
4.3.2.1 Temperature Calculation ..... 31
4.3.3 Checksum Nibble Details ..... 31
4.4 SENT 32
4.4.1 Checksum Nibble Details ..... 33
4.4.2 SENT Features ..... 33
4.4.2.1 Temperature Calculation ..... 34
4.5 SICI Interface 35

**5 End of Line Configuration ..... 36**
5.1 Angle Base and Rotation Direction 36
5.2 Customer ID 36
5.3 Look-up Table 36

**6 Pre-Configured Derivatives ..... 37**
6.1 TLE5014C16 37
6.2 TLE5014S16 37
6.3 TLE5014P16 38

**7 Package Information ..... 39**
7.1 Package Parameters 39
7.2 Package Outline 41
7.3 Footprint 42

chanhvinh.com



7.4 Packing 42
7.5 Marking 43
**8 Revision History ..... 44**

chanhvinh.com



# List of Tables


Table 0-1 Derivative Ordering codes (see Chapter 6 for description of derivatives) ..... 1
Table 1-1 Pin Description ..... 9
Table 3-1 Maximum Ratings for Voltages and Output Current ..... 12
Table 3-2 Maximum Temperature and Magnetic Field ..... 12
Table 3-3 Mission Profile ..... 13
Table 3-4 Lifetime & Ignition Cycles ..... 13
Table 3-5 Operating Range ..... 13
Table 3-6 Magnetic Field Range ..... 14
Table 3-7 Electrical Characteristics ..... 15
Table 3-8 Output driver ..... 16
Table 3-9 Signal Delay and Delay Time Jitter ..... 17
Table 3-10 ESD Voltage ..... 19
Table 3-11 Angle Error for -40°C < $T_A$ < 85°C and magnetic field range 33mT < B < 50mT ..... 20
Table 3-12 Angle Error for -40°C < $T_A$ < 125°C ..... 20
Table 3-13 EEPROM ..... 21
Table 3-14 Power Dissipation ..... 22
Table 4-1 PWM Interface ..... 24
Table 4-2 PWM Frequency tolerance ..... 25
Table 4-3 SPC unit times ..... 26
Table 4-4 Structure of SPC status nibble ..... 26
Table 4-5 Bus programming Address Configuration ..... 27
Table 4-6 SPC trigger for bus mode ..... 28
Table 4-7 SPC master pulse timing ..... 28
Table 4-8 SPC blanking time ..... 29
Table 4-9 SENT unit times ..... 32
Table 4-10 Structure of SENT status nibble ..... 33
Table 6-1 SPC Derivative Configuration TLE5014C16 ..... 37
Table 6-2 SPC Derivative Configuration TLE5014C16 ..... 37
Table 6-3 SENT Derivative Configuration TLE5014S16 ..... 37
Table 6-4 SENT Derivative Configuration TLE5014S16 ..... 37
Table 6-5 PWM Derivative Configuration TLE5014P16 ..... 38
Table 6-6 PWM Derivative Configuration TLE5014P16 ..... 38
Table 7-1 Package Parameters ..... 39
Table 7-2 Position of the die in the package ..... 39

chanhvinh.com



# List of Figures


Figure 1-1 TLE5014 block diagram . . . . . 6
Figure 1-2 Sensitive bridges of the GMR sensor (not to scale) . . . . . 8
Figure 1-3 Pin configuration (top view) . . . . . 9
Figure 2-1 Application circuit for SPC interface, with a SPC address ID = 0 defined by pin IF1 and IF2 . . . . 10
Figure 2-2 Application circuit for PWM interface, protocol starting with a rising edge. For interface configuration starting with a falling edge, a pull-up resistor is required instead. 10
Figure 2-3 Application circuit for SENT interface . . . . . 11
Figure 3-1 Allowed magnetic field range within ambient temperature range. . . . . 14
Figure 3-2 Operating area and sensor reaction for over- and undervoltage. . . . . 16
Figure 3-3 Output level high / low . . . . . 17
Figure 3-4 Delay time . . . . . 18
Figure 3-5 Variation of delay time (jitter) . . . . . 18
Figure 4-1 PWM interface with duty cycle range starting with a rising edge . . . . . 25
Figure 4-2 SPC frame for bus mode with constant trigger length . . . . . 27
Figure 4-3 SPC Master pulse timing . . . . . 28
Figure 4-4 SPC blanking time in case of same ID triggered . . . . . 29
Figure 4-5 SPC blanking time in case of different IDs are triggered . . . . . 29
Figure 4-6 SPC nibble low time . . . . . 30
Figure 4-7 Example of a SPC protocol frame configuration with short serial message enabled . . . . . 31
Figure 4-8 SENT frame example, implementation: single secure sensor without pause pulse . . . . . 32
Figure 4-9 SENT nibble low time . . . . . 33
Figure 4-10 SENT protocol . . . . . 34
Figure 7-1 Tolerance of the die in the package . . . . . 39
Figure 7-2 PG-TDSO-16 package dimension. . . . . 41
Figure 7-3 Position of sensing element . . . . . 41
Figure 7-4 Footprint of PG TDSO-16 . . . . . 42
Figure 7-5 Tape and Reel . . . . . 42
Figure 7-6 Marking of PG-TDSO-16 . . . . . 43

chanhvinh.com



# 1 Functional Description

## 1.1 Block Diagram

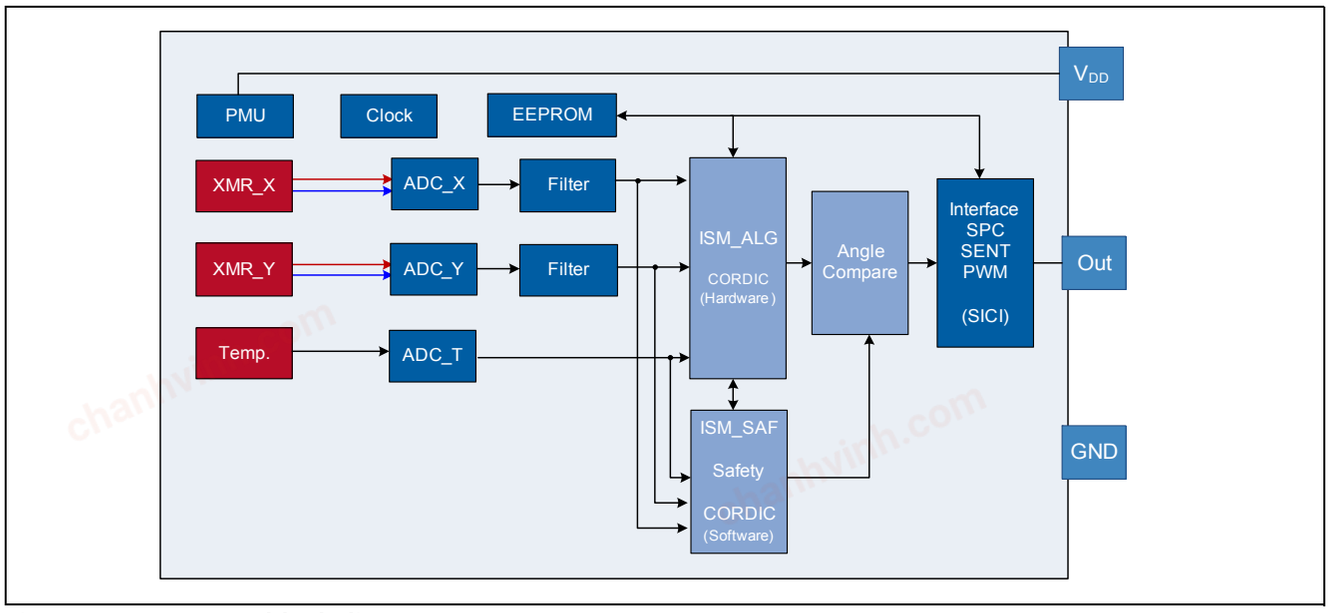


**Figure 1-1 TLE5014 block diagram**

## 1.2 Functional Block Description

### Internal Power Supply (PMU)

The internal blocks of the TLE5014 are supplied from several voltage regulators:

- GMR Voltage Regulator, VRS
- Analog Voltage Regulator, VRA
- Digital Voltage Regulator, VRD

These regulators are directly connected to the supply voltage VDD.

### Oscillator and PLL (Clock)

The digital clock of the TLE5014 is given by the Phase-Locked Loop (PLL), which is fed by an internal oscillator.

### SD-ADC

The Sigma-Delta Analog-Digital-Converters (SD-ADC) transform the analog GMR voltages and temperature voltage into the digital domain.

### Digital Signal Processing Unit ISM_ALG

The Digital Signal Processing Unit ISM_ALG contains the:

- Intelligent State Machine (ISM), which does error compensation of offset, offset temperature drift, amplitude synchronicity and orthogonality of the raw signals from the GMR bridges.
- COordinate Rotation DIgital Computer (CORDIC), which contains the trigonometric function for angle calculation

chanhvinh.com



### Digital Signal Processing Unit ISM_SAF

The Digital Signal Processing Unit ISM_SAF performs the internal safety mechanism and plausibility checks. Furthermore, a second CORDIC algorithm is implemented in a diverse way as in the ISM_ALG. This is for cross checking the angle calculation

### Interface

The Interface block is used to generate the PWM, SENT and SPC signals

### Angle Compare

This digital block compares the angle value calculated by ISM_ALG and ISM_SAF. In case they are not identical, an error is indicated in the transmitted protocol.

### EEPROM

The EEPROM contains the configuration and calibration parameters. A part of the EEPROM can be accessed by the customer for application specific configuration of the device. Programming of the EEPROM is achieved with the SICI interface. Programming mode can be accessed directly after power-up of the IC.

## 1.3 Sensing Principle

The **G**iant **M**agneto **R**esistance (GMR) sensor is implemented using vertical integration. This means that the GMR-sensitive areas are integrated above the logic part of the TLE5014 device. These GMR elements change their resistance depending on the direction of the magnetic field.

Four individual GMR elements are connected to one Wheatstone sensor bridge. These GMR elements sense one of two components of the applied magnetic field:

- X component, $V_x$ (cosine) or the
- Y component, $V_y$ (sine)

With this full-bridge structure the maximum GMR signal is available and temperature effects cancel out each other.

chanhvinh.com



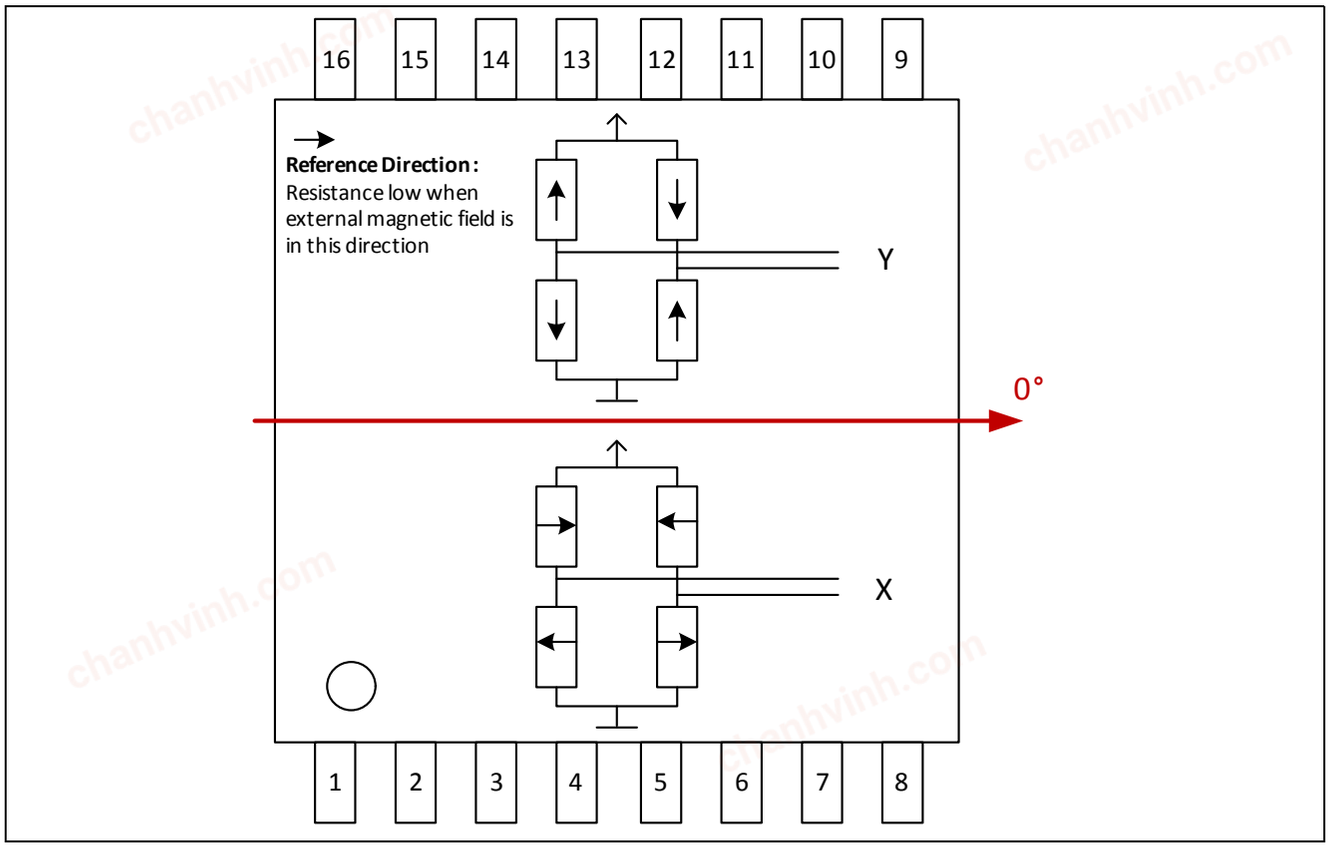


Figure 1-2 Sensitive bridges of the GMR sensor (not to scale)

*Attention: Due to the rotational placement inaccuracy of the sensor IC in the package, the sensors 0° position may deviate by up to 3° from the package edge direction indicated in Figure 1-2.*

In Figure 1-2 the arrows in the resistors represent the magnetic direction which is fixed in the reference layer. If the external magnetic field is parallel to the direction of the Reference Layer, the resistance is minimal. If they are anti-parallel, resistance is maximal.

The output signal of each bridge is only unambiguous over 180° between two maxima. Therefore two bridges are oriented orthogonally to each other to measure 360°.

With the trigonometric function ARCTAN2, the true 360° angle value is calculated out of the raw X and Y signals from the sensor bridges.

chanhvinh.com



## 1.4 Pin Configuration

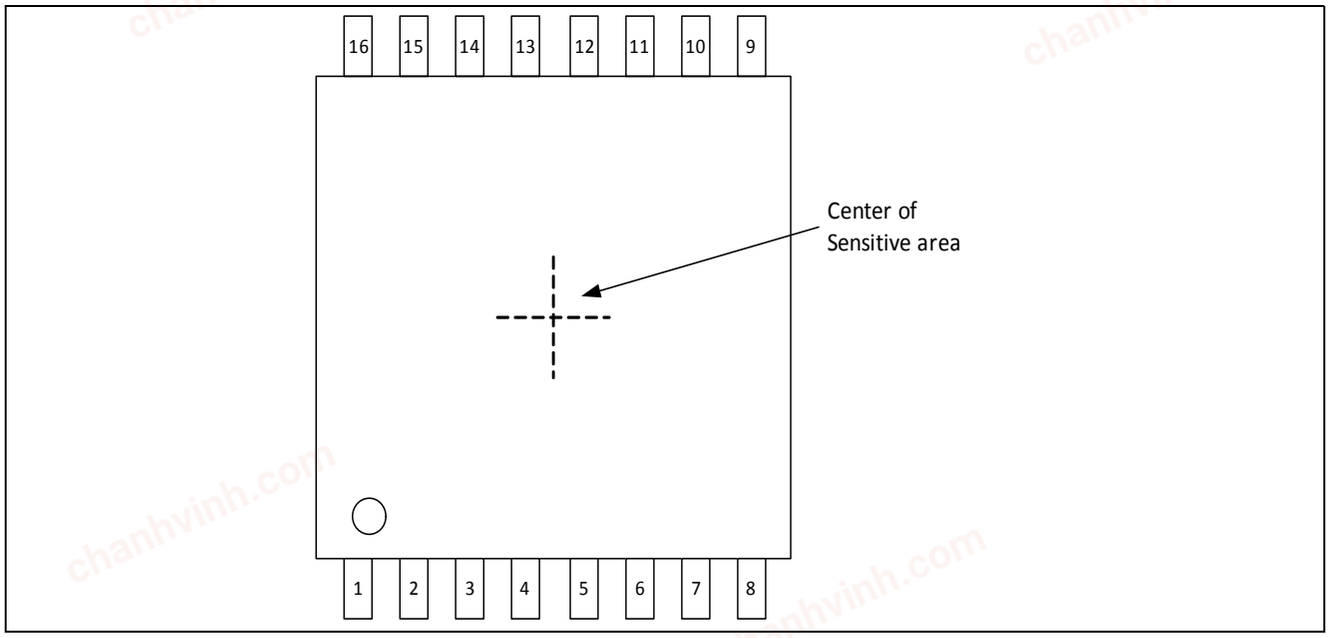


**Figure 1-3 Pin configuration (top view)**

## 1.5 Pin Description

The following Table 1-1 describes the pin-out of the chip.

**Table 1-1 Pin Description**

| Pin No. | Symbol | In/Out | Function |
|---|---|---|---|
| 1 | IF1 | I | address coding for programming in bus mode, (see Table 4-5)<br>connect to GND for SENT / PWM interface |
| 2 | IF2 | I | address coding for programming in bus mode, (see Table 4-5)<br>connect to GND for SENT / PWM interface |
| 3 | IF3 | I | connect to IFC |
| 4 | VDD | - | supply voltage, positive |
| 5 | GND | - | supply voltage, ground |
| 6 | IFA | - | connect to GND. |
| 7 | IFB | I/O | SENT / SPC / PWM / SICI interface |
| 8 | IFC | O | address coding for programming in bus mode, (see Table 4-5)<br>connect to IF3 |
| 9-16 | - | - | n.c. |

chanhvinh.com



# 2 Application Circuits

The application circuits in this chapter show the various communication possibilities of the TLE5014. To improve robustness against electro-magnetic disturbances, a capacitor of 100nF on the supply and a capacitor with minimum value of Cw = 1nF on the output pin is recommended. These capacitors shall be placed as close as possible to the corresponding sensor pins.

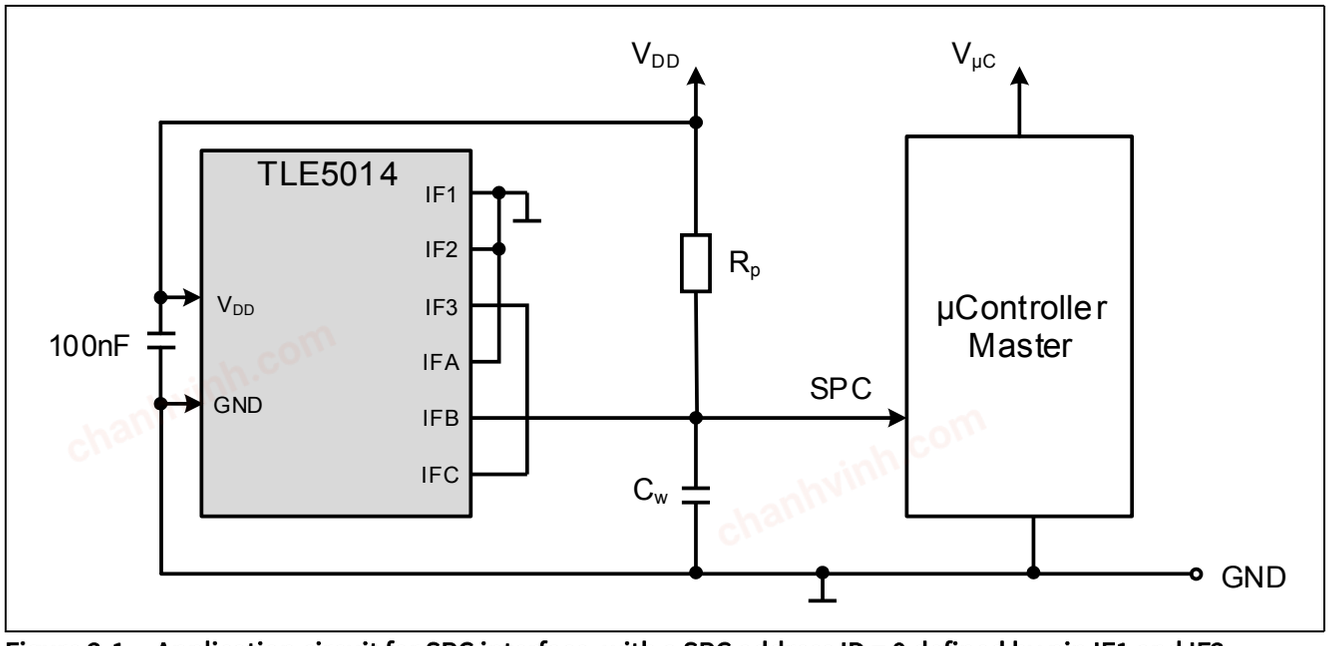


**Figure 2-1 Application circuit for SPC interface, with a SPC address ID = 0 defined by pin IF1 and IF2**

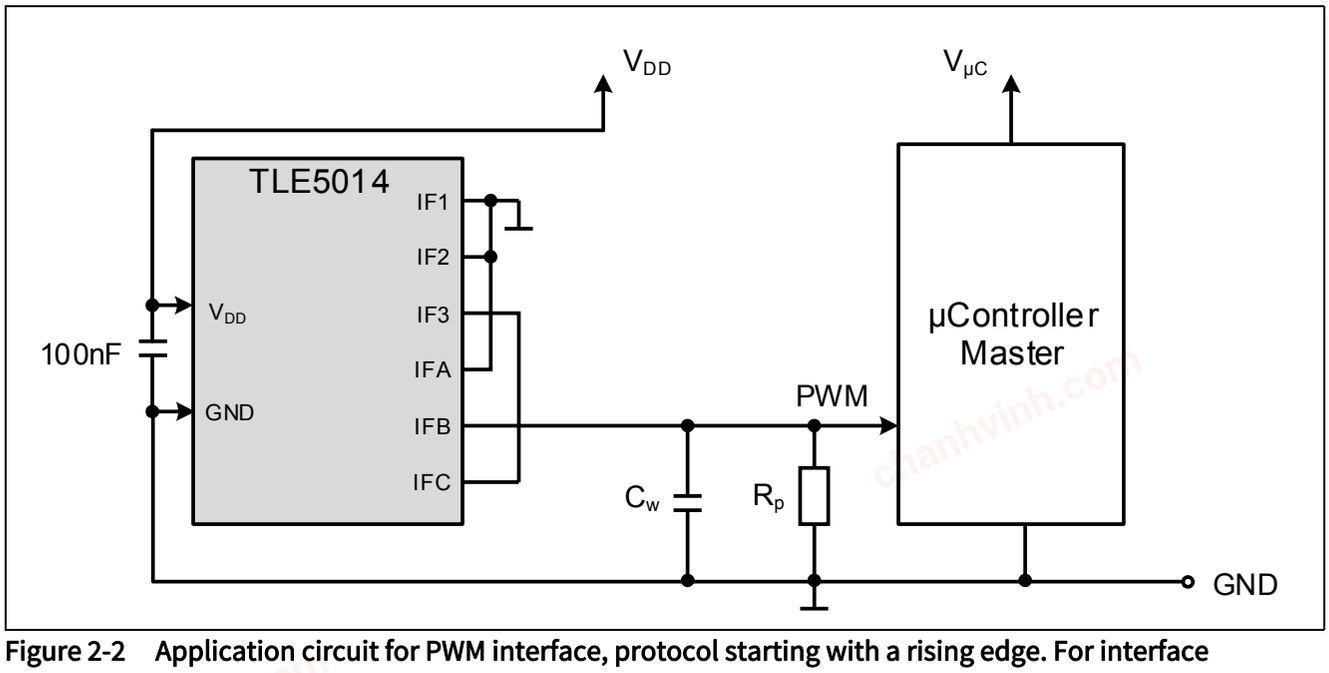


**Figure 2-2 Application circuit for PWM interface, protocol starting with a rising edge. For interface configuration starting with a falling edge, a pull-up resistor is required instead.**

chanhvinh.com



## Application Circuits

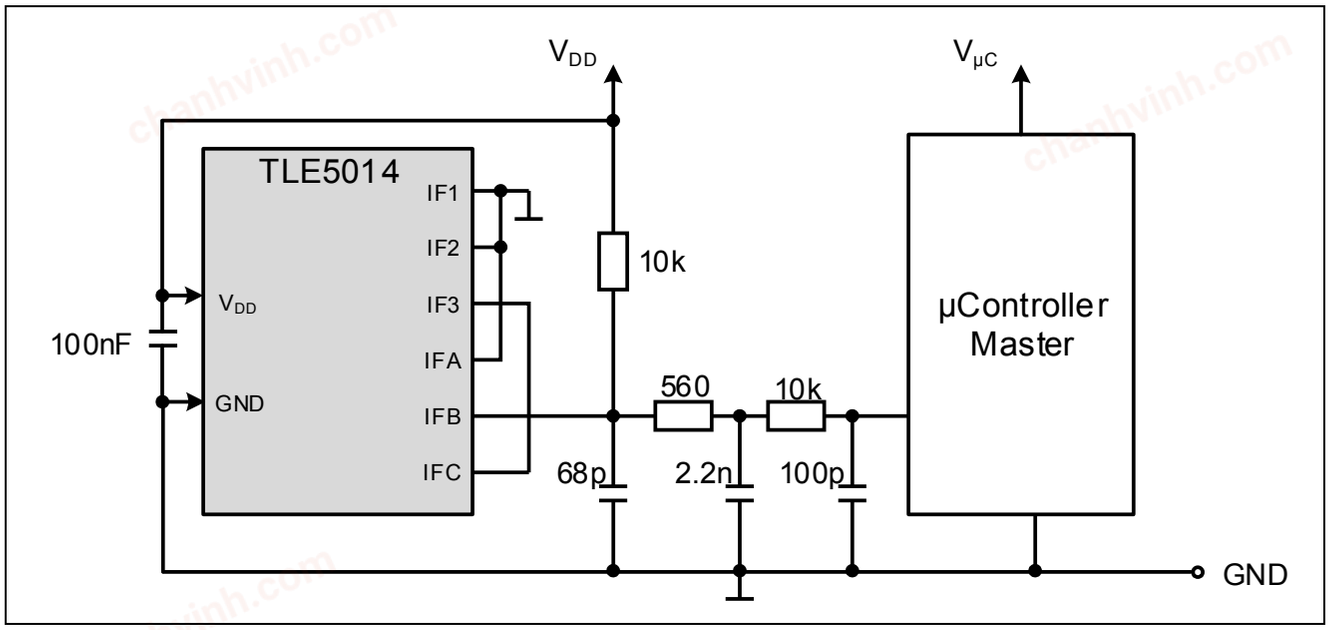


Figure 2-3 Application circuit for SENT interface

chanhvinh.com



# 3 Specification

## 3.1 Absolute Maximum Ratings

Stresses above the max. values listed here may cause permanent damage to the device. Exposure to absolute maximum rating conditions for extended periods may affect device reliability. Maximum ratings are absolute ratings; exceeding only one of these values may cause irreversible damage to the device.

**Table 3-1 Maximum Ratings for Voltages and Output Current**

| Parameter | Symbol | Values | | | Unit | Note / Test Condition |
|---|---|---|---|---|---|---|
| | | Min. | Typ. | Max. | | |
| Absolute maximum supply voltage | $V_{DD}$ | -18 | | 26 | V | for 40h, no damage of device; -18V means $V_{DD}$ < GND |
| Voltage Peaks | $V_{DD}$ | | | 30 | V | for 50µs, no current limitation |
| Absolute maximum voltage for pin IFB | $V_{IO}$ | -18 | | 19.5 | V | for 40h; no damage of device, -18V means $V_{DD}$ < GND |
| Absolute maximum voltage for pin IF1, IF2, IF3, IFA, IFC | $V_{IF}$ | -0.3 | | 6 | V | no damage of device |
| Voltage Peaks (for pin IFB) | $V_{IO}$ | | | 30 | V | for 50µs, no current limitation |
| Maximum current through output in case of short circuit | $I_{short}$ | | | 40 | mA | for 40h, no damage of the device, current limited by device |

**Table 3-2 Maximum Temperature and Magnetic Field**

| Parameter | Symbol | Values | | | Unit | Note / Test Condition |
|---|---|---|---|---|---|---|
| | | Min. | Typ. | Max. | | |
| Maximum ambient temperature | $T_A$ | -40 | | 125 | °C | Q100, Grade 1 |
| Maximum allowed magnetic field | B | | | 200 | mT | max 5 min @ $T_A$ = 25°C |
| Maximum allowed magnetic field | B | | | 150 | mT | max 5 h @ $T_A$ = 25°C |
| Storage & Shipment[1) 2)] | $T_{storage}$ | 5 | | 40 | °C | for dry packed devices, Relative humidity < 90%, storage time < 3a |

1) Air-conditioning of ware houses, distribution centres etc. is not necessary, if the combination of the specified limits of 75% R.H. and 40 °C will not be exceeded during storage for more than 10 events per year, irrespective of the duration per event, and one of the specified limits (75 % R.H. or 40 °C) will not be exceeded for longer than 30 days per year

2) See Infineon Application Note: “Storage of Products Supplied by Infineon Technologies”

chanhvinh.com



**Table 3-3 Mission Profile**

| Parameter | Symbol | Values | | | Unit | Note / Test Condition |
|---|---|---|---|---|---|---|
| | | Min. | Typ. | Max. | | |
| Mission Profile | $T_{A,max}$ | | | 125 | °C | for 2000h |

**Table 3-4 Lifetime & Ignition Cycles**

| Parameter | Symbol | Values | | | Unit | Note / Test Condition |
|---|---|---|---|---|---|---|
| | | Min. | Typ. | Max. | | |
| Operating life time | $t_{op_life}$ | | | 15.000 | h | see Table 3-3 for mission profile |
| Total life time | $t_{tot_life}$ | | | 19 | a | additional 2a storage time[1)] |
| Ignition cycles | $N_{ignition}$ | | | 200.000 | | during operating lifetime $t_{op_life}$ |

1) The lifetime shall be considered as an anticipation with regard to the product that shall not extend the warranty period

The device qualification is done according to AEC Q100 Grade 1 for ambient temperature range -40°C < $T_A$ < 125°C

## 3.2 Operating Range

The following operating conditions must not be exceeded in order to ensure correct operation of the angle sensor. All parameters specified in the following sections refer to these operating conditions, unless otherwise noted. Table 3-5 is valid for -40°C < $T_A$ < 125°C unless otherwise noted.

**Table 3-5 Operating Range**

| Parameter | Symbol | Values | | | Unit | Note / Test Condition |
|---|---|---|---|---|---|---|
| | | Min. | Typ. | Max. | | |
| Operating supply voltage | $V_{DD}$ | 4.2 | | 5.5 | V | - |
| Supply Voltage Slew Rate | $V_{DD_slew}$ | 0.1 | | $10^8$ | V/s | - |
| Operating ambient temperature | $T_A$ | -40 | | 125 | °C | - |
| Angle speed | n | | | 10000 | °/s | - |
| Min/max value for pull-up resistor for SENT | $R_p$ | 10 | | 55 | kOhm | for SENT protocol |
| Min/max value for pull-up resistor for SPC | $R_p$ | 1.45 | | 2.2 | kOhm | for SPC protocol |
| Value for pull-down resistor for PWM | $R_p$ | | 50 | | kOhm | for PWM protocol starting with rising edge |
| Value for pull-up resistor for PWM | $R_p$ | | 50 | | kOhm | for PWM protocol starting with falling edge |
| Capacitive output load on interface (SPC, SENT, PWM) | $C_w$ | | | 3500[1)] | pF | incl. external circuit and cable |

1) Larger load capacitance up to 7nF is possible but may influence rise / fall time of the signal

### Magnetic Field Range

chanhvinh.com



## Specification

The operating range of the magnetic field describes the field values where the performance of the sensor, especially the accuracy, is as specified in Table 3-11 and Table 3-12. This value is valid for a NdFeB magnet with a Tc of -1300ppm/K. In case a different magnet is used, the individual Tc of this magnet has to be considered and ensured that the limits are not exceeded. The allowed magnetic field range for the ambient temperature range is given in Figure 3-1.

**Table 3-6 Magnetic Field Range**

| Parameter | Symbol | Values | | | Unit | Note / Test Condition |
|---|---|---|---|---|---|---|
| | | Min. | Typ. | Max. | | |
| Angle measurement field range @ 25°C | B | 25 | | 80 | mT | $T_A$ = 25°C, valid for NdFeB magnet |

The below figure Figure 3-1 shows the magnetic field range which shall not be exceeded during operation at the respective ambient temperature. The temperature dependency of the magnetic field is based on a NdBFe magnet with Tc = -1300ppm/K.

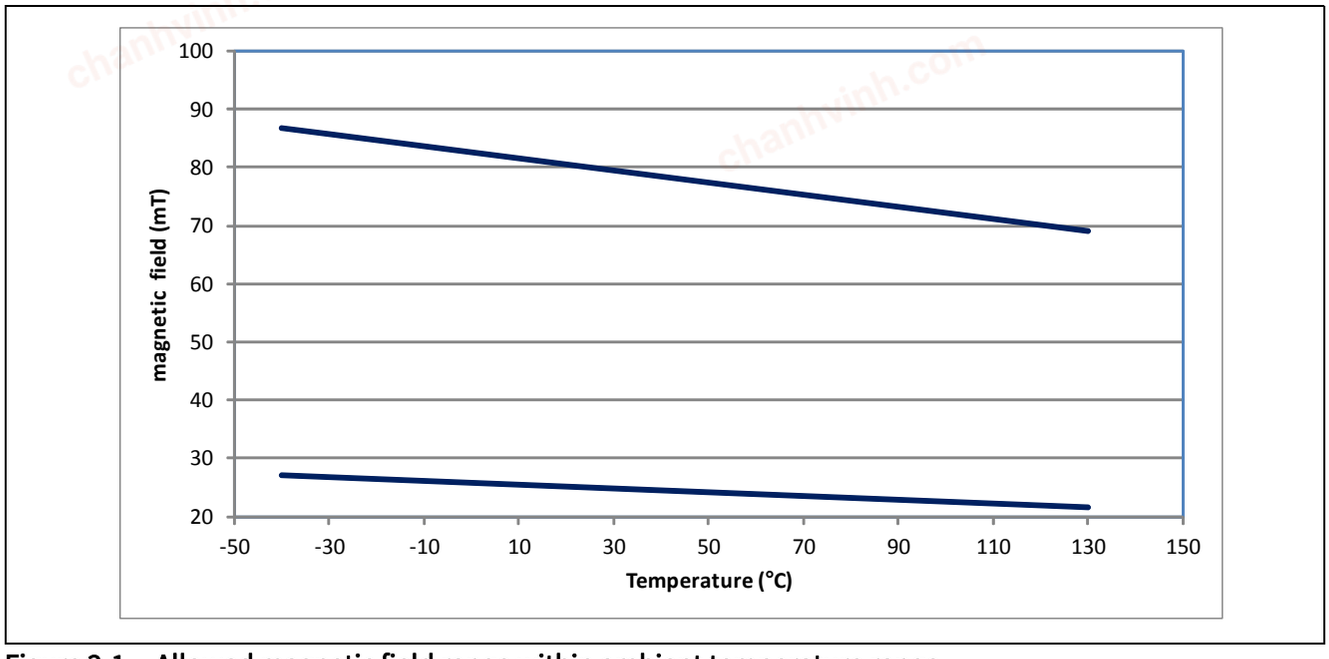


**Figure 3-1 Allowed magnetic field range within ambient temperature range.**

It is also possible to widen the magnetic field range for higher temperatures. In that case, additional angle errors have to be considered.

chanhvinh.com



## 3.3 Electrical Characteristics

### 3.3.1 Input/Output Characteristics

The indicated parameters apply to the full operating range, unless otherwise specified. The typical values correspond to a supply voltage $V_{DD}$ = 5.0V and an ambient temperature $T_A$ = 25°C, unless individually specified. All other values correspond to -40°C < $T_A$ < 125°C.

**Table 3-7 Electrical Characteristics**

| Parameter | Symbol | Values | | | Unit | Note / Test Condition |
|---|---|---|---|---|---|---|
| | | Min. | Typ. | Max. | | |
| Operating Supply Current | $I_{DD}$ | | 12 | 15 | mA | - |
| Time between supply voltage reaches reset value and valid angle value is available on the output (without interface delay | $t_{Pon}$ | | | 7 | ms | |
| Overvoltage detection on $V_{DD}$ | $V_{OV}$ | | 6.5 | 7.0 | V | in an overvoltage condition the output switches to tri-state |
| Undervoltage detection on $V_{DD}$ | $V_{UV}$ | 3.8 | 4.1 | | V | in an undervoltage condition the sensor performs a reset |
| Overvoltage detection on IFB | $V_{OB}$ | | 1.5V+$V_{DD}$ | | | in an overvoltage condition the output switches to tri-state |
| Ripple Current due to PWM slopes | $I_{ripple}$ | | | 9 | mA | peak-peak; $V_{DD}$ = 5V, 30kHz lowpass filter |
| Ripple Current due to SENT slopes | $I_{ripple}$ | | | 9 | mA | peak-peak; $V_{DD}$ = 5V, 30kHz lowpass filter |
| Internal clock tolerance | $\Delta f_{clock}$ | -5 | | 5 | % | including temperature and lifetime |

The following Figure 3-2 shows the operating area of the device, the condition for overvoltage and undervoltage and the corresponding sensor reaction. The values for the over- and undervoltage comparators are the typical values from Table 3-7.

In the extended range, the sensor fulfills the full specification. However, voltages above the operating range can only be applied for a limited time (see Table 3-1).

chanhvinh.com



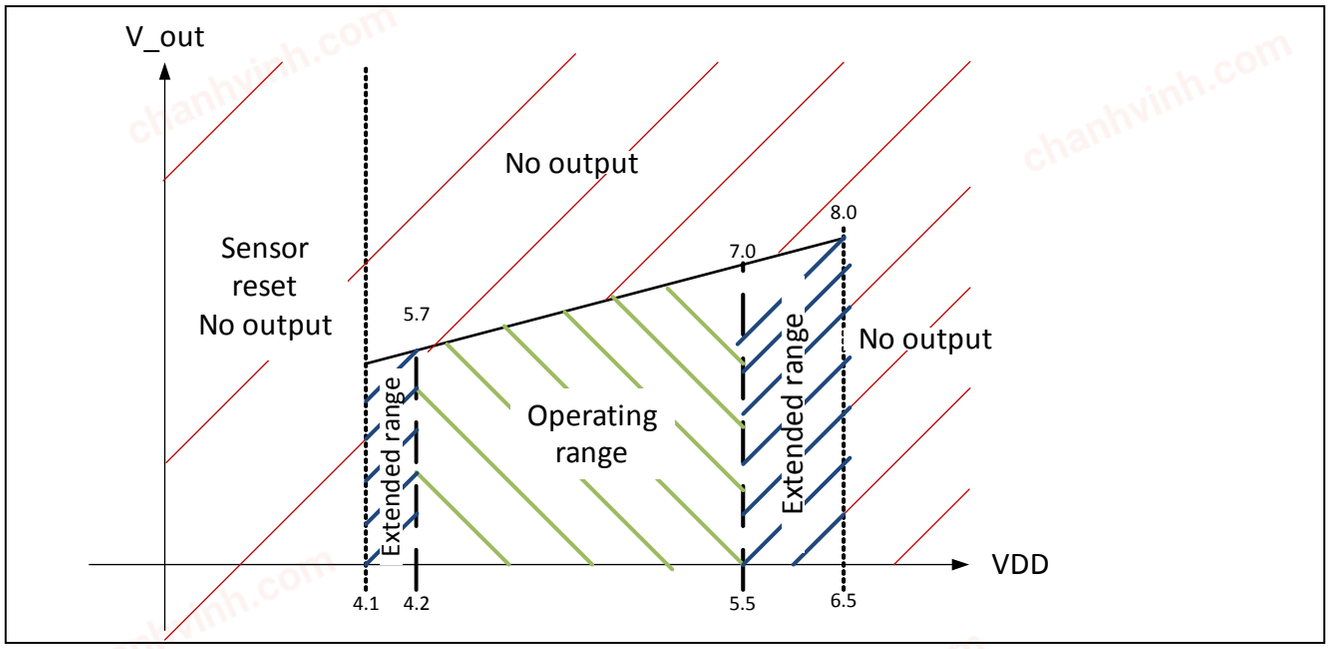


**Figure 3-2 Operating area and sensor reaction for over- and undervoltage.**

**Table 3-8 Output driver**

| Parameter | Symbol | Values | | | Unit | Note / Test Condition |
|---|---|---|---|---|---|---|
| | | Min. | Typ. | Max. | | |
| Output low level[1)] | $V_{OL}$ | | | $0.1*V_{DD}$ | | $V_{DD}$ = 5V, $I_{sink}$ = 0.1mA (SENT spec) |
| Output low level[1)] | $V_{OL}$ | | | $0.2*V_{DD}$ | | $V_{DD}$ = 5V, $I_{sink}$ = 2mA |
| Output low level[1)] | $V_{OL}$ | | | $0.3*V_{DD}$ | | $V_{DD}$ = 5V, $I_{sink}$ = 3mA |
| Output high level[1)] | $V_{OH}$ | $0.9*V_{DD}$ | | | | $V_{DD}$ = 5V, $I_{sink}$ = 0.1mA (SENT spec) |
| Output high level[1)] | $V_{OH}$ | $0.8*V_{DD}$ | | | | $V_{DD}$ = 5V, $I_{sink}$ = 2mA |
| Output high level[1)] | $V_{OH}$ | $0.7*V_{DD}$ | | | | $V_{DD}$ = 5V, $I_{sink}$ = 3mA |

1) In case several sensors are connected in a bus mode, the output levels may be influenced and out of specification in case a malfunction of one of the sensors on the bus occurs (e.g. one sensors has loss of $V_{DD}$).

chanhvinh.com



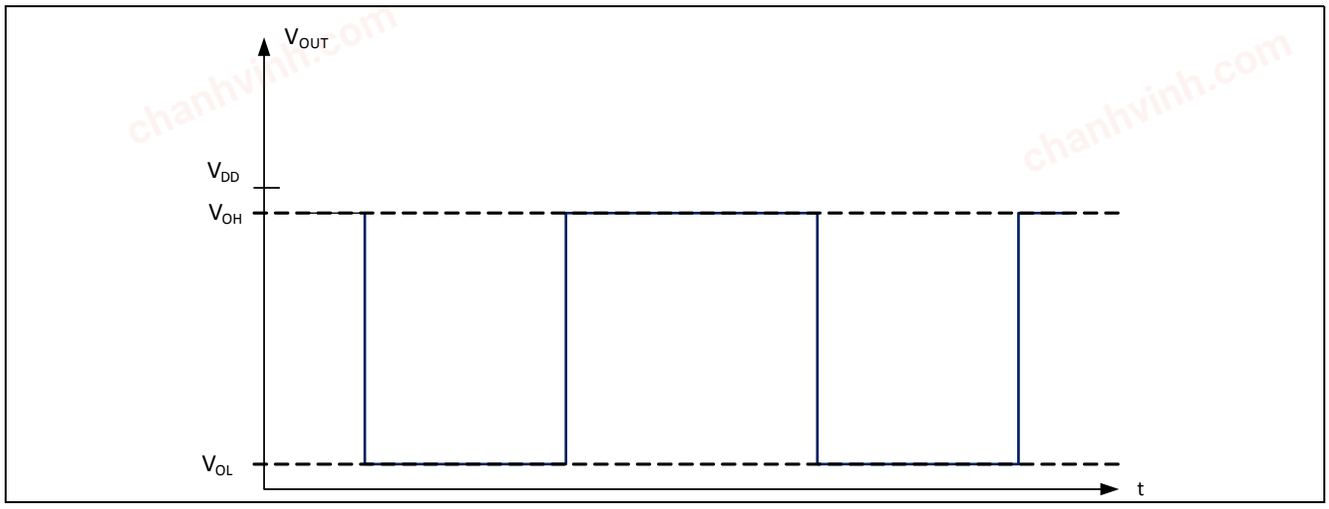


Figure 3-3 Output level high / low

### Output Delay Time and Jitter

Due to the internal signal sampling and signal conditioning, there will be a delay of the provided angle value at the output. The definition of this delay is described in below Figure 3-4

Table 3-9 Signal Delay and Delay Time Jitter

| Parameter | Symbol | Values | | | Unit | Note / Test Condition |
|---|---|---|---|---|---|---|
| | | Min. | Typ. | Max. | | |
| Delay time between real angle and angle output (from SPC/SENT falling edge of sync pulse, without interface delay) incl. jitter and oscillator tolerances | $t_{adel}$ | 10.0 | 25.6 | 42.5 | µs | min/max values include already the jitter $t_{deljit}$ |
| Delay time between real angle and angle output (from PWM rising edge, without interface delay) incl. jitter and oscillator tolerances | $t_{adel}$ | 36.7 | 51.2 | 67.4 | µs | min/max values include already the jitter $t_{deljit}$ |
| Variation of delay time $t_{adel}$ | $t_{deljit}$ | | | +/-14 | µs | see Figure 3-5. already included in $t_{adel}$ specification |

The delay time describes the time difference of the real angle at the point in time were the SPC/SENT protocol issues a falling edge (synchronization nibble) and the angle value which is transmitted with this data frame. It is the “age” of the transmitted angle value in reference to the falling edge of the synchronization pulse.

For PWM interface the reference point in time is the starting edge of the PWM (rising or falling, depending on protocol setting).

The delay time values given in Table 3-9 include also the internal oscillator variation and jitter.

The delay time variation (or jitter of delay time) describes the statistical variation of this parameter in case several measurements are done. The delay time $t_{adel}$ can be considered as the mean value with the jitter $t_{deljit}$ as variation (see Figure 3-5).

chanhvinh.com



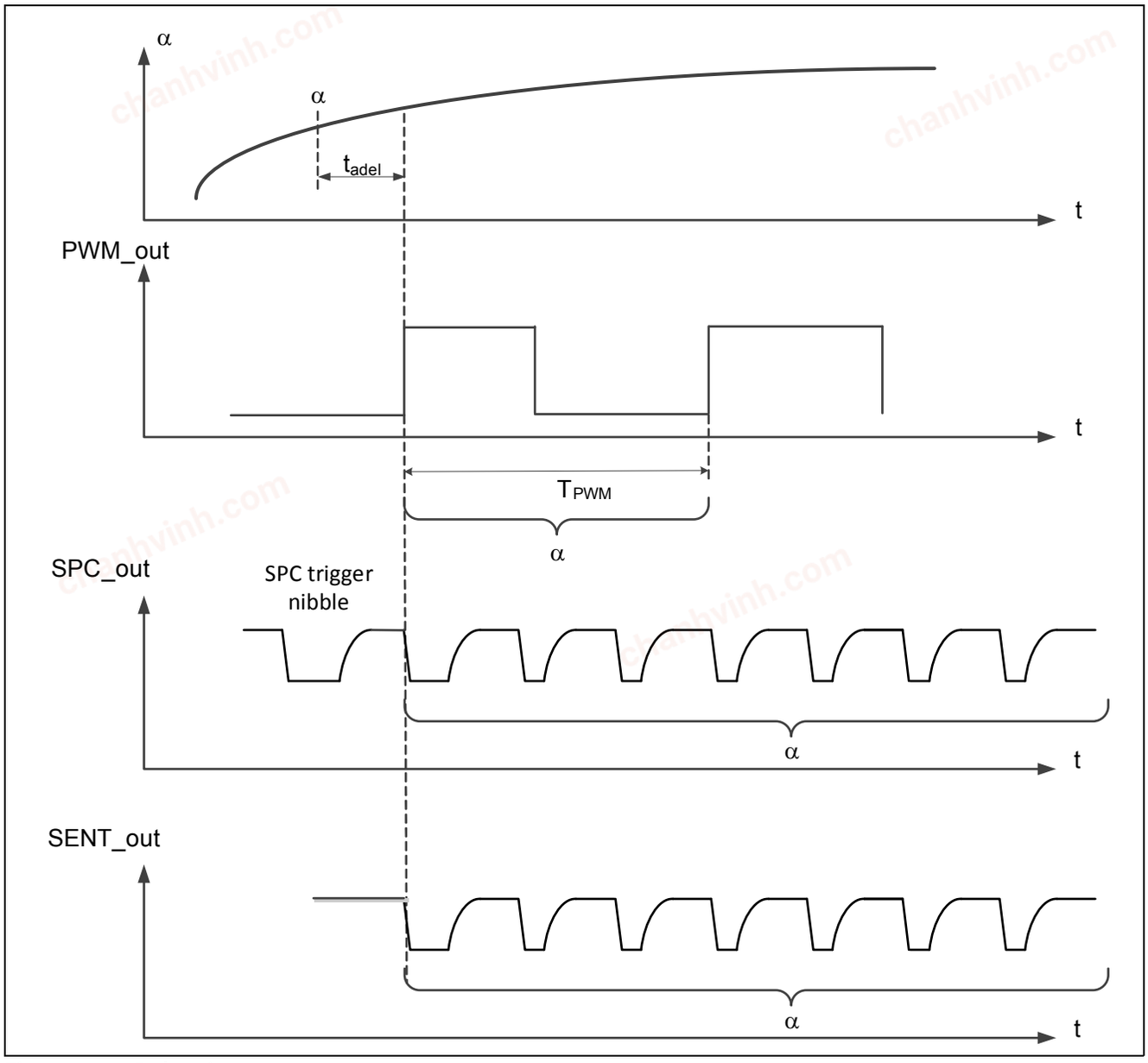


Figure 3-4 Delay time

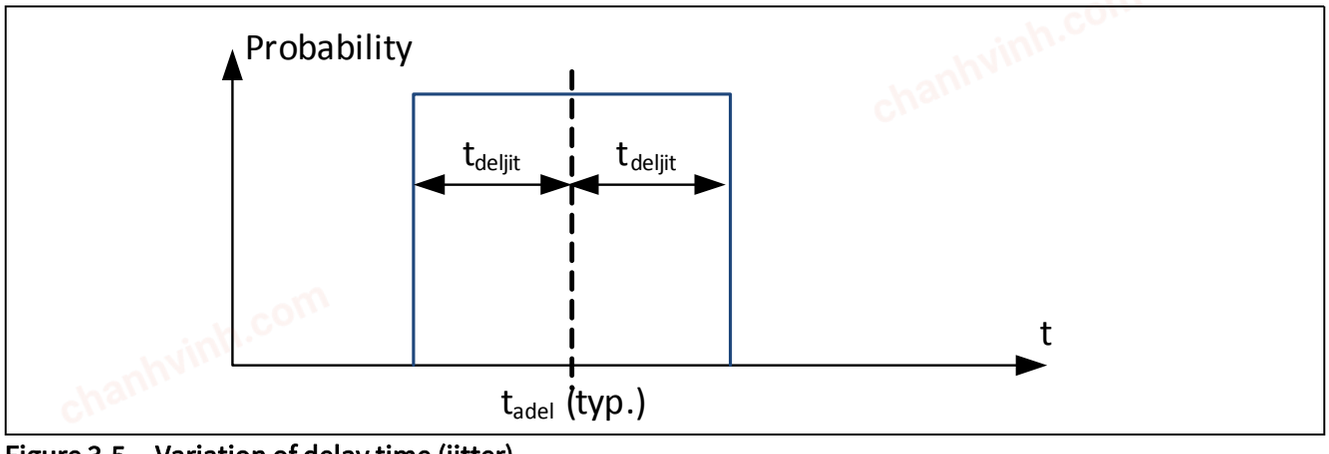


Figure 3-5 Variation of delay time (jitter)

chanhvinh.com



### 3.3.2 ESD Protection

**Table 3-10 ESD Voltage**

| Parameter | Symbol | Values | | | Unit | Note / Test Condition |
|---|---|---|---|---|---|---|
| | | Min. | Typ. | Max. | | |
| Electro-Static-Discharge voltage (HBM), according to ANSI/ESDA/JEDEC JS-001 | $V_{HBM}$ | | | ±4 | kV | HBM contact discharge for pins VDD, GND, IFB |
| Electro-Static-Discharge voltage (HBM), according to ANSI/ESDA/JEDEC JS-001 | $V_{HBM}$ | | | ±2 | kV | HBM contact discharge for pins IF1, IF2, IF3, IFA, IFC |
| Electro-Static-Discharge voltage (CDM), according to JESD22-C101 | $V_{CDM}$ | | | ±0.5 | kV | for all pins except corner pins |
| | | | | ±0.75 | kV | for corner pins only |

chanhvinh.com



### 3.3.3 Angle Performance

After internal angle calculation, the sensor has a remaining error, as shown in Table 3-11 for an ambient temperature range up to 85°C and a reduced magnetic field range and in Table 3-12 for the ambient temperature range up to 125°C and full magnetic operating range. The error value refers to $B_Z$= 0mT.

The overall angle error represents the relative angle error. This error describes the deviation from the reference line after zero-angle definition. It is valid for a static magnetic field.

If the magnetic field is rotating during the measurement, an additional propagation error is caused by the angle delay time (see Table 3-9).

**Table 3-11 Angle Error for -40°C < $T_A$ < 85°C and magnetic field range 33mT < B < 50mT**

| Parameter | Symbol | Values | | | Unit | Note / Test Condition |
|---|---|---|---|---|---|---|
| | | Min. | Typ. | Max. | | |
| Accuracy[1] over temperature w/o look-up table | $A_{Err,T}$ | | | 0.8 | ° | 0h[2], over temperature |
| Accuracy[1] over temperature and lifetime, w/o look-up table | $A_{Err,s}$ | | | 0.9 | ° | lifetime stress: $T_A$=85°C/1000h/50mT |
| Accuracy[1)3)] over temperature and lifetime, with look-up table | $A_{Err,sLUT}$ | | | 0.65 | ° | lifetime stress: $T_A$=85°C/1000h/50mT with look-up table correction |
| Hysteresis[4] | $A_{Hyst}$ | | 0.1 | 0.16 | ° | value includes quantization error of 12bit angle output |

1) Hysteresis and noise are included in the angle accuracy specification
2) “0h” is the condition when the part leaves the production at Infineon
3) Verified by characterization
4) Hysteresis is the maximum difference of the angle value for forward and backward rotation

**Table 3-12 Angle Error for -40°C < $T_A$ < 125°C**

| Parameter | Symbol | Values | | | Unit | Note / Test Condition |
|---|---|---|---|---|---|---|
| | | Min. | Typ. | Max. | | |
| Accuracy[1] over temperature w/o look-up table | $A_{Err,T}$ | | | 0.8 | ° | 0h[2], over temperature B = 33mT to 80mT[3] |
| Accuracy[1] over temperature and lifetime, w/o look-up table | $A_{Err,s}$ | | | 1.0 | ° | 33mT…80mT[3] lifetime stress: $T_A$=125°C/2000h |
| Accuracy[1)4)] over temperature and lifetime, with look-up table | $A_{Err,sLUT}$ | | | 0.85 | ° | B = 33mT to 80mT[3], lifetime stress: $T_A$=125°C/2000h with look-up table correction |
| Hysteresis[5] | $A_{Hyst}$ | | 0.1 | 0.16 | ° | B = 33mT to 80mT[6], value includes quantization error of 12bit angle output |

1) Hysteresis and noise are included in the angle accuracy specification
2) “0h” is the condition when the part leaves the production at Infineon
3) For the magnetic field range of 25mT < B < 33mT, 0.2° have to be added to the max. angle accuracy
4) Verified by characterization

chanhvinh.com



5) Hysteresis is the maximum difference of the angle value for forward and backward rotation
6) For the magnetic field range of 25mT < B < 33mT, 0.1° have to be added to the max. hysteresis $A_{Hyst}$

## 3.4 EEPROM Memory

The sensor includes a non-volatile memory (NVM) where calibration data and sensor configuration data are stored. The customer has access to a part of this memory for storage of application specific data (e.g. look-up table & customer ID)

The time for programming the customer relevant part of the NVM as well as maximum cycles of programming and data retention is given in Table 3-13

**Table 3-13 EEPROM**

| Parameter | Symbol | Values | | | Unit | Note / Test Condition | Number |
|---|---|---|---|---|---|---|---|
| | | Min. | Typ. | Max. | | | |
| Number of possible NVM programming cycles | $n_{Prog}$ | | | 100 | | - | |
| NVM data retention | $t_{retention}$ | | - | 21 | a | includes 19a lifetime and 2a storage | |
| Time for programming of whole NVM (customer relevant part) | $t_{Prog}$ | | 0.5 | | s | incl. look-up table, configuration, customer ID; with 100kbit/s | |

## 3.5 Reset Concept and Fault Monitoring

Some internal and external faults of the device can trigger a reset. During this reset, all output pins are high-ohmic to avoid any disturbance of other sensors which may be connected together in a bus mode. A reset is indicated as soon as the sensor is back at operational mode either by a status bit (SPC and SENT protocol) or with a duty cycle in the diagnostic range (PWM interface). In the case of a periodic reset (sensor toggles between on and off state) it is avoided that the output toggles with a frequency close to a valid PWM frequency. In this way it is ensured, that a reset can clearly be distinguished from a valid output signal.

## 3.6 External & Internal Faults

In case of an occurrence of external or internal faults, as for example overvoltage or undervoltage, the sensor reacts in a way that these faults are indicated to the customer. This can be either by a status bit (SPC and SENT protocol) or with a duty cycle in the diagnostic range (PWM interface).

The error signaling (safe state) is defined as:

- indication of an error (e.g. status bit)
- detectable wrong output (e.g. CRC failure)
- no output

All errors are indicated as long as they persist, but at least once. After disappearance of the error, the error indication is also cleared. The error is signaled and communicated to the ECU latest after 5ms from occurrence of the fault. To achieve this, it has to be ensured that the protocol transmission time is not exceeding 1ms. Otherwise, the fault tolerant time interval is increased above 5ms.

chanhvinh.com



### Overvoltage, undervoltage

It is ensured, that the sensor provides a valid output value as long as the voltage is within the operating range or no under- or overvoltage is indicated. At occurrence of an undervoltage, the sensor performs a reset. The implemented undervoltage comparator at $V_{DD}$ detects an undervoltage at ~4.1V (typ. value). At occurrence of an overvoltage, the sensor output goes to tristate and no protocol is transmitted. The implemented overvoltage comparator at $V_{DD}$ detects an overvoltage at ~6.5V (typ. value). An overvoltage on the output pin IFB is detected as soon as the voltage at IFB is more than ~1.5V above $V_{DD}$.

### Open and Shorts

All pins of the device withstand a short to ground (GND) and a short to $V_{DD}$ (as long as $V_{DD}$ is within the operating range). In case of an open $V_{DD}$ connection or an open GND the sensor provides a detectable wrong signal (e.g. no valid output protocol or duty cycle) which is considered as a safe state.

It is also ensured that a short between two neighboring pins leads to a detectable wrong output signal.

### Communication Failures

An external fault can happen where an ongoing communication is interrupted before it is finished correctly. In such an event, no sensor malfunction or dead-lock will occur.

## 3.7 Power Dissipation

Following table describes the calculated power dissipation for the different application cases within the operating range defined in Table 3-5. It is a worst case assumption with the maximum values within the operating range.

**Table 3-14 Power Dissipation**

| Scenario | Configuration | $V_{DD}$ (V) | $I_{DD}$ (mA) | $V_{OUT}$ (V) | $I_{OUT}$ (mA) | P (mW) |
|---|---|---|---|---|---|---|
| 1 | PWM | 5.5 | 15 | | | 82.5 |
| 2 | SPC open drain | 5.5 | 15 | 1.1 | 3 | 85.8 |
| 3 | SENT | 5.5 | 15 | 0.2 | 0.55 | 82.6 |
| 4 | SPC bus mode | 5.5 | 15 | 1.1 | 3 | 85.8 |

## 3.8 Device Programming (SICI Interface)

To minimize the wiring in the application and to allow an end of line calibration and configuration of the device at the customer, the programming interface does not require additional pins or wiring. It is possible to do the programming on the available output line of the sensor output (SPC, SENT or PWM interface). This single wire interface is called SICI interface. It is only for programming purpose and not for communication or read out of angle values during operation. The programming mode can be accessed directly after start-up of the IC by sending the appropriate command on the output line.

Following parameters can be programmed end of line:

- Zero angle (angle base)
- Rotation direction (clock wise or counter clock wise)
- Look-up table (32 points)
- Customer ID (112bit individual data)

chanhvinh.com



## Specification

To align the angle output of the sensor with the application specific required zero angle direction this value can be programmed. All further output angles are in reference to this zero angle.

In case several sensors are connected in a bus mode configuration (SPC interface) each sensor needs to have an individual address to enable a programming of the devices in the bus configuration. Please refer to Table 4-5 for details how to assign individual addresses to the sensors.

## Look-Up Table

To increase the accuracy of the provided angle value, a look-up table is implemented which allows to compensate for external angle errors which may be introduced for example by the magnetic circuit. Alignment tolerances (eccentricity or tilt) may lead to a non-linearity of the output signal which can be compensated using the implemented look-up table. This look-up table has 32 equidistant points over 360° angle range with a linear interpolation between the 32 defined values

Further details for programming and configuration of the device can be found in the corresponding user manual of the TLE5014.

chanhvinh.com



# 4 Interfaces

This chapter describes the interfaces of the sensor. Several interfaces are implemented, the active interface is predefined by Infineon and can not be changed. The available preconfigured devices are described in Chapter 6. The indicated parameters apply to the full operating range, unless otherwise specified. The typical values correspond to a supply voltage $V_{DD}$ = 5.0V and an ambient temperature of $T_A$ = 25°C, unless individually specified. All other values correspond to -40°C < $T_A$ < 125°C

## 4.1 Sensor Output Driver

The TLE5014 has an output driver on the pin IFB which can be switched from a push-pull configuration to a quasi-open drain with active controlled slope.

- The push-pull configuration is preferred with SENT and PWM interface. It has controlled rising and falling slopes to reduce EMC emission and provides a controlled and defined pulse length independent of external circuitry. The push-pull output driver switches between 0V and $V_{DD}$. An additional pull-down or pull-up resistor is recommended to ensure a defined output level at sensor start-up.
- For the SPC interface the open drain setting with controlled slopes is required. In this configuration, the TLE5014 has controlled rising and falling slopes but after reaching the HIGH-level, the output is switched to an open-drain behavior. The HIGH level is then maintained by the external pull-up resistor. It is necessary, that the sensor releases the output line once reaching the HIGH level so that the master (µ-Controller) can issue the SPC trigger pulse by pulling the line low.

## 4.2 Pulse Width Modulation (PWM) Interface

PWM Interface: An uni-directional interface with the angle information coded in the length of a pulse. The angle value is proportional to the duty cycle of the output frequency.

The duty cycle is calculated as the ratio of the “high” time to the period length. An increasing angle results in an increased duty cycle, with an angle of 0° having the smallest duty cycle.

**Table 4-1 PWM Interface**

| Parameter | Symbol | Values | | | Unit | Note / Test Condition |
|---|---|---|---|---|---|---|
| | | Min. | Typ. | Max. | | |
| PWM output frequencies | $f_{PWM1}$ | 200 | | 2200 | Hz | configurable |
| Resolution | | | 12 | | bit | |
| Data duty cycle range | $DC_{data}$ | 5 | | 95 | % | configurable, the 12bit angle value is mapped to this duty cycle range |
| Diagnostic duty cycle, low[1)] | $DC_{diag,low}$ | 0 | | 25 | % | configurable, fault indication |
| Diagnostic duty cycle, high[1)] | $DC_{diag,high}$ | 75 | | 100 | % | configurable, BIST error indication or reset indication |

1) Care has to be taken to ensure that there is no overlap of diagnostic duty cycle and data duty cycle range

The starting edge of the PWM protocol can be programmed as rising or falling edge. In case the protocol shall start with a rising edge (start with a LOW level), a pull-down resistor is required (see Figure 2-2). For the start-up condition with a falling edge (start with a HIGH level), a pull-up resistor instead has to be implemented.

The tolerance of the programmed PWM frequency over temperature and lifetime is given in Table 4-2

chanhvinh.com



**Table 4-2 PWM Frequency tolerance**

| Parameter | Symbol | Values | | | Unit | Note / Test Condition |
|---|---|---|---|---|---|---|
| | | Min. | Typ. | Max. | | |
| PWM Frequency tolerance | $PWM_{freq_tol}$ | -5 | | 5 | % | |

### PWM Interface Error Indication

For diagnostic purpose and to indicate internal sensor failures, the output duty cycle of the PWM is limited. Within this reserved lower and upper duty cycle range, no valid angle information is provided. Instead, this duty cycle range is used for error indication with defined duty cycles which are clearly separated from the usable data duty cycle range. The following events are indicated:

- Error occurred during performing the built-in self test (BIST) after power-up
- Occurrence of internal or external fault
- Sensor reset occurred

### PWM Interface Configuration

The PWM interface parameter can be configured in a wide range. Beside the frequency, it is also possible to define data duty cycle range and low and high value of the diagnostic duty cycle. It has to be ensured by proper device configuration that there is no overlap of data duty cycle range and low or high value of diagnostic duty cycle.

A possible and valid configuration is:

- Data duty cycle: 12.5% ...87.5%, the 12bit angle value is mapped to this duty cycle
- Diagnostic duty cycle, low: 5%; an internal sensor fault is indicated with this duty cycle
- Diagnostic duty cycle, high: 95%; an start-up BIST error or sensor reset is indicated with this duty cycle

The PWM interface with data duty cycle range and reserved duty cycle for diagnostics is shown in Figure 4-1

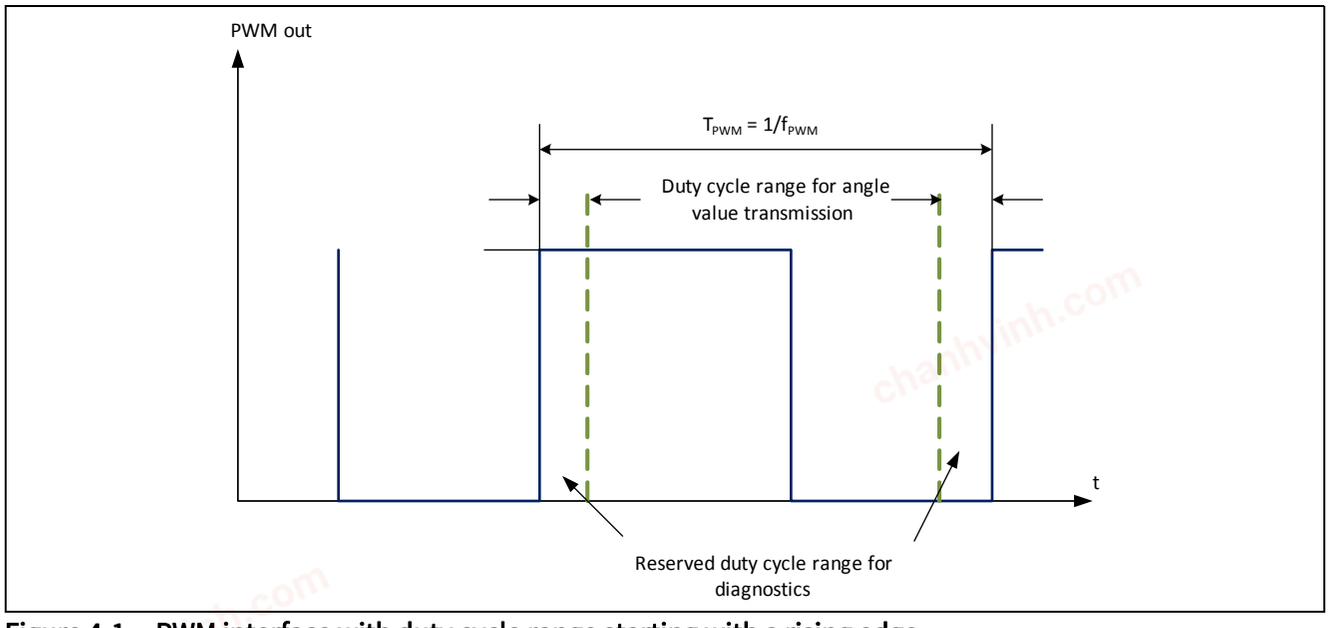


**Figure 4-1 PWM interface with duty cycle range starting with a rising edge**

As the PWM interface is an analog protocol, the rise and fall times, as well as the trigger level for the detection of the high and low state of the signal have influence on the measured duty cycle. Therefore, an additional angle error is introduced which varies with the measurement conditions (e.g. Rp, CW, trigger level). This error contribution is not included in Table 3-11 and Table 3-12.

chanhvinh.com



## 4.3 Short PWM Code (SPC)

The Short PWM Code (SPC) is a synchronized data transmission based on the SENT protocol (Single Edge Nibble Transmission) defined by SAE J2716. As opposed to SENT, which implies a continuous transmission of data, the SPC protocol transmits data only after receiving a specific trigger pulse from the microcontroller. The required length of the trigger pulse depends on the sensor number, which is configurable. Thereby, SPC allows the operation of up to four sensors on one bus line.

As in SENT, the time between two consecutive falling edges defines the value of a 4-bit nibble, thus representing numbers between 0 and 15. The transmission time therefore depends on the transmitted data values. All values are multiples of a unit time frame concept (Table 4-3). A SPC frame consists of the following nibbles (see Figure 4-2):

- A trigger pulse from the master (microcontroller), which initiates the data transmission
- A synchronization period of 56 UT
- A status nibble of 12-27 UT
- 3 data nibbles of 12-27 UT, transmitting a 12bit angle value
- A 4bit rolling counter of 12-27 UT (optional)
- A CRC nibble of 12-27 UT
- An end pulse to terminate the SPC transmission (12 UT)

**Table 4-3 SPC unit times**

| Parameter | Symbol | Values | | | Unit | Note / Test Condition |
|---|---|---|---|---|---|---|
| | | Min. | Typ. | Max. | | |
| SPC unit time | UT | 1.5 | | 3.0 | µs | configurable in steps of 0.5µs, tolerance given by clock tolerance |

The CRC checksum includes the status nibble and the data nibbles and can be used to check the validity of the decoded data.

The status nibble, which is sent with each SPC data frame, provides an error indication. In case the sensor detects an error, the corresponding error bit in the status nibble is set. An error is indicated by the corresponding error bit in the status nibble as long as it persists, but at least once.

**Table 4-4 Structure of SPC status nibble**

| Bits | Description |
|---|---|
| [0] LSB | Short Serial Message bit (data) or bus mode ID LSB |
| [1] | Short Serial Message bit (start indication) or bus mode ID MSB |
| [2] | Warning indication (internal or external faults) |
| [3] MSB | Error indication (BIST error or sensor reset) |

### SPC bus mode

When the sensor is used in a bus mode with other sensors on a common SPC line, individual addresses have to be assigned to each sensor for identification. These address is configured in the EEPROM of the device. A corresponding trigger nibble from the microcontroller can therefore address each individual sensor. The trigger nibble low time is shown in Table 4-6. Each low time corresponds to an individual sensor address. The total length of the trigger nibble can be selected to be constant at 90UT (constant trigger length) or variable according to Table 4-7 (variable trigger length).

chanhvinh.com



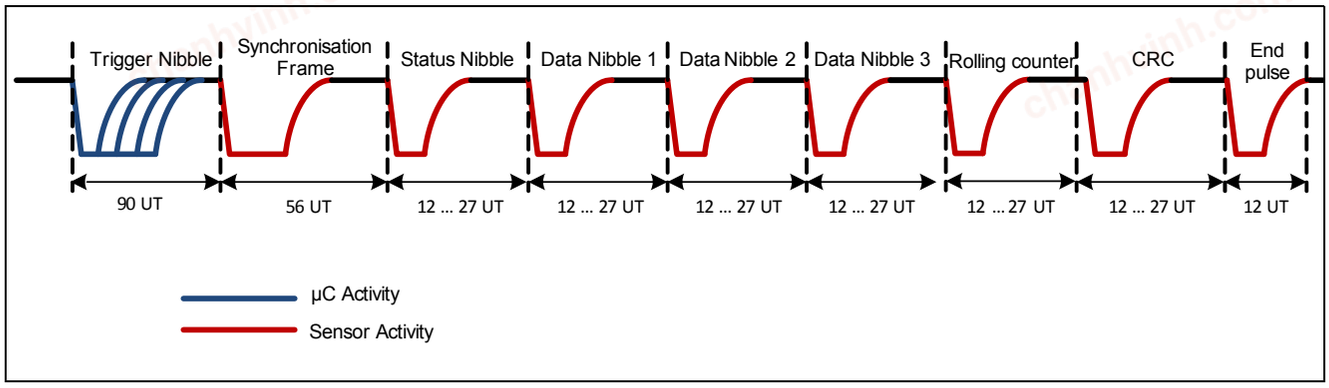


**Figure 4-2 SPC frame for bus mode with constant trigger length**

### Selection of the addresses for SPC interface and bus programming

The SPC protocol allows a bus configuration of up to 4 participants on one output line. To identify the individual devices and allow a programming in the bus mode, an individual address has to be assigned to each sensor. The programming interface SICI is using hard-wired addresses (see Table 4-5), whereas the SPC protocol uses the addresses configured in the corresponding EEPROM of the sensor. For the operation of the sensor in a SPC bus mode, it is strongly recommended that the hard-wired address is also written into the EEPROM of the sensor, as all sensors are preconfigured with the default value “ID = 0” (see user manual for further details).

**Table 4-5 Bus programming Address Configuration**

| Address | IF1 | IF2 |
|---|---|---|
| 0 | GND | GND |
| 1 | IFC | GND |
| 2 | GND | IFC |
| 3 | IFC | IFC |

## 4.3.1 Master Trigger Pulse Requirements

A SPC transmission is initiated by a master trigger pulse on the output pin. To detect a low-level, the voltage must be below a threshold $V_{th}$. The sensor detects that the output line has been released as soon as $V_{th}$ is crossed. Figure 4-3 shows the timing definitions for the master pulse. The master low time $t_{mlow}$ is given in Table 4-6. The total trigger time $t_{mtr}$ is given in Table 4-7.

chanhvinh.com



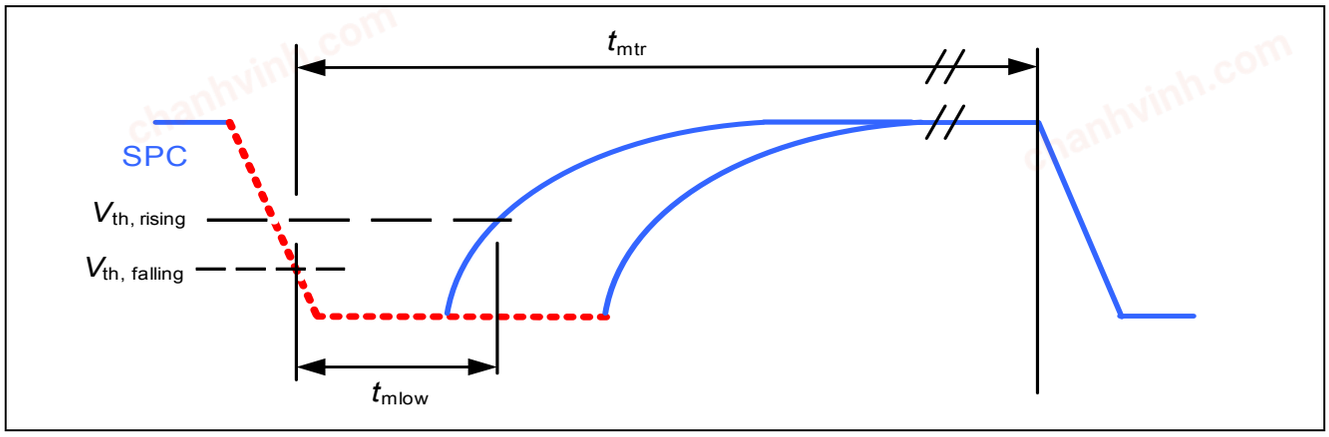


**Figure 4-3 SPC Master pulse timing**

**Table 4-6 SPC trigger for bus mode**

| Parameter | Symbol | Values | | | Unit | Note / Test Condition |
|---|---|---|---|---|---|---|
| | | Min. | Typ. | Max. | | |
| Master nibble low time | $t_{mlow}$ | 9 | | 12 | UT | addr. 0 |
| Master nibble low time | $t_{mlow}$ | 19 | | 23 | UT | addr. 1 |
| Master nibble low time | $t_{mlow}$ | 35.5 | | 40.5 | UT | addr. 2 |
| Master nibble low time | $t_{mlow}$ | 61.5 | | 67.5 | UT | addr. 3 |

**Table 4-7 SPC master pulse timing**

| Parameter | Symbol | Values | | | Unit | Note / Test Condition |
|---|---|---|---|---|---|---|
| | | Min. | Typ. | Max. | | |
| Threshold, falling edge | $V_{th,falling}$ | | 35 | | % of $V_{DD}$ | 1) |
| Threshold, rising edge | $V_{th,rising}$ | | 50 | | % of $V_{DD}$ | 1) |
| Total trigger time | $t_{mtr}$ | | 90 | | UT | 2) for constant trigger length |
| Total trigger time | $t_{mtr}$ | | $t_{mlow}$ + 12 | | UT | 2) for variable trigger length |

1) Not subject to production test - verified by design/characterization

2) Trigger time in the sensor is fixed to the number of units specified in the “typ.” column, but the effective trigger time varies due to the sensor’s clock variation

After a SPC frame is transmitted, it is necessary to wait for a specified delay time $t_{frame,blanking}$ , before the next SPC trigger can be issued. This time is defined from the falling edge of the end pulse to the falling edge of the trigger nibble (see **Figure 4-4**).

chanhvinh.com



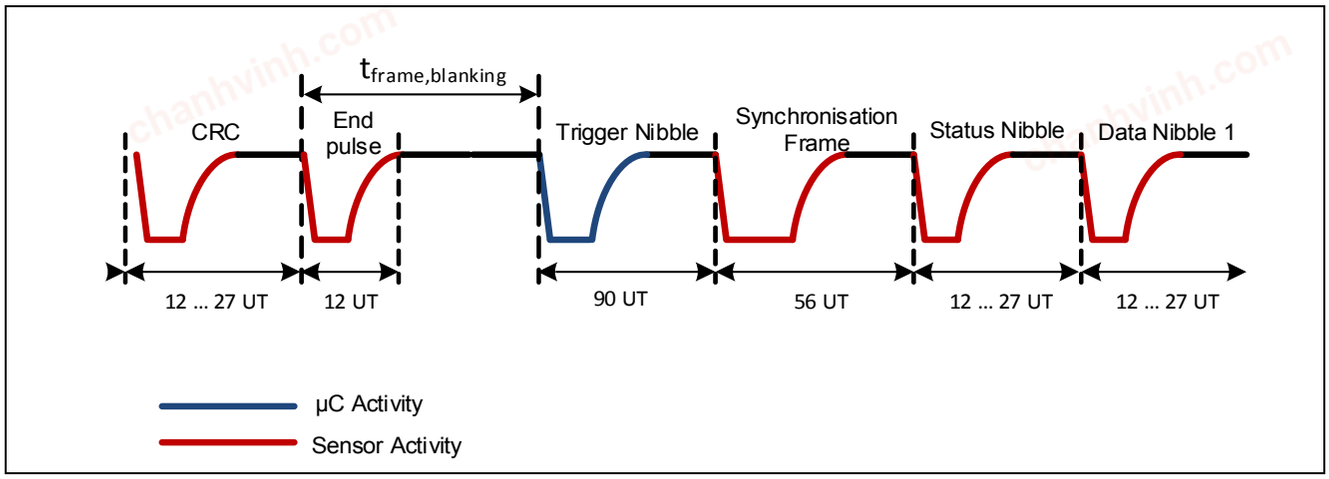


**Figure 4-4 SPC blanking time in case of same ID triggered**

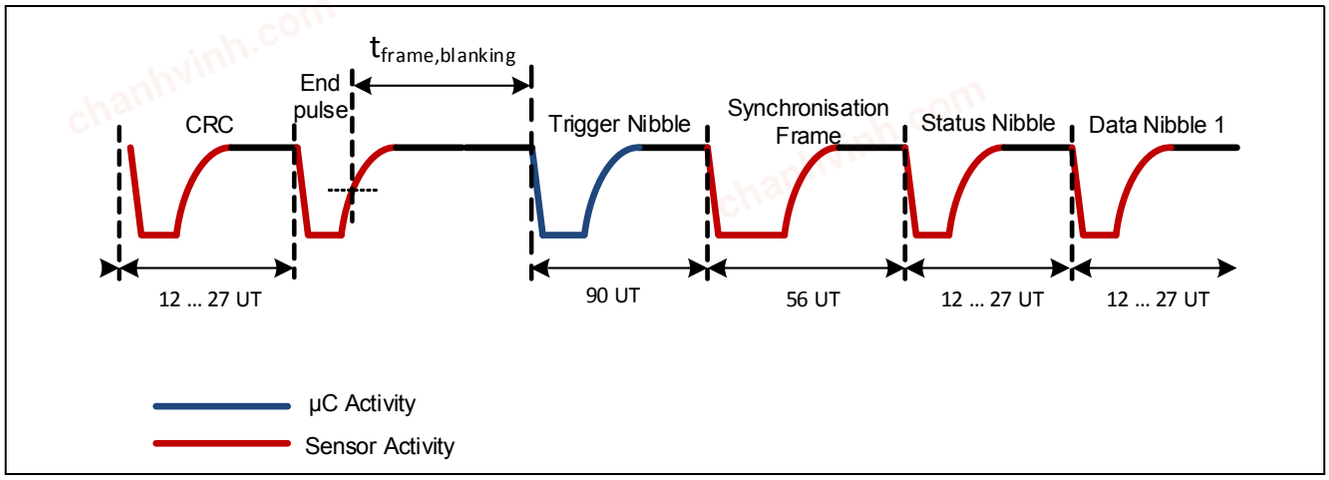


**Figure 4-5 SPC blanking time in case of different IDs are triggered**

**Table 4-8 SPC blanking time**

| Parameter | Symbol | Values | | | Unit | Note / Test Condition |
|---|---|---|---|---|---|---|
| | | Min. | Typ. | Max. | | |
| SPC blanking time | $t_{frame,blanking}$ | | | 12UT | | [1] same ID is triggered, measured from falling edge of end pulse |
| SPC blanking time | $t_{frame,blanking}$ | | | 50µs | | [1] different ID's are triggered, measured from rising edge (50%) of end pulse |

1) Not subject to production test - verified by design/characterization

The nibble low time $t_{low}$ can be configured to be 3UT or 5UT. This can reduce the overall frame length. The low time includes the fall time of the edge, therefore it has to be ensured that the fall time of the edge is fast enough to reach the low level within the configured low time (Figure 4-6).

chanhvinh.com



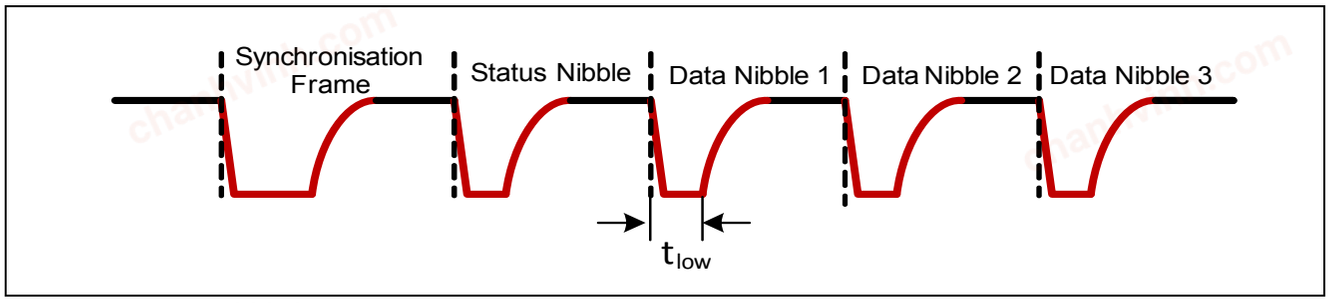


**Figure 4-6 SPC nibble low time**

### 4.3.2 SPC Features

**Rolling counter**

This 4bit counter counts the number of transmitted frames with rollover back to 0 and increment with each message. This counter is for verification in the ECU that no frame is missed or that no frame is sent repeatedly from the sensor. The rolling counter nibble is sent after the 3rd data nibble and before the CRC nibble.

The rolling counter nibble can be disabled, but to meet the safety requirements and target ASIL level of the application, this is not recommended.

Optional, the rolling counter can be included in the CRC nibble, thus reducing the total number of nibbles and therefore the total frame length. In this case, the rolling counter is reduced to a 2bit value. Further details can be found in Chapter 4.3.3

**Short Serial Message**

The short serial message is an additional option which can be enabled and disabled. The short serial message provides additional information in a slow channel transmitting a 8bit temperature value, a 16bit word containing angle base & rotation direction information and a 32bit sensor ID.

In each SPC frame, one bit of information is transmitted. The start of the short serial message is indicated by a “1” in bit [1] of the status nibble. For the next 15 SPC frames, this bit will contain a “0”. Information is transmitted in blocks of 16bit with 1 bit per SPC frame in bit [0] of the status nibble.

4 bit message ID

8 bit data

4bit CRC (calculated from message ID and data bits)

The message ID is used for identification of the type of data received. All data are transmitted in the bit [0] of the status nibble in the order MSB to LSB.

The transmitted information is as follows:

Message -ID 0: 8bit temperature value starting with MSB

Message -ID 1: 8bit of angle base (starting with MSB) address 0x00A0, bit [15:8]

Message -ID 2: 8bit of angle base (starting with MSB-8) address 0x00A0, bit [7:0]

Message -ID 3: 8bit temperature value starting with MSB

Message -ID 4: 8bit of sensor ID1 (starting with MSB) address 0x00F2, bit [15:8]

Message -ID 5: 8bit of sensor ID1 (starting with MSB-8) address 0x00F2, bit [7:0]

Message -ID 6: 8bit of sensor ID2 (starting with MSB) address 0x00F4, bit [15:8]

Message -ID 7: 8bit of sensor ID2 (starting with MSB-8) address 0x00F4, bit [7:0]

Message -ID 8 to Message -ID 15: Message -ID 0 to Message -ID 7 will be repeated

chanhvinh.com



In case the short serial message is enabled, the bits [0] and [1] of the status nibble for address (sensor ID) indication are not available. In this case, the sensor ID is coded in the CRC. Further details in Chapter 4.3.3.

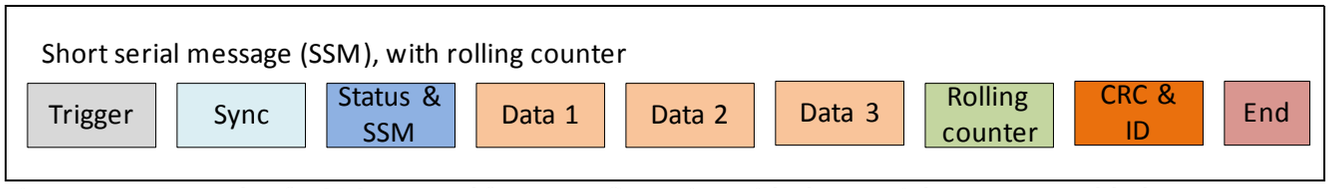


**Figure 4-7 Example of a SPC protocol frame configuration with short serial message enabled**

#### 4.3.2.1 Temperature Calculation

The temperature information which is transmitted with the short serial message is an 8-bit value. It has to be considered as a two-complement ranging from T[LSB] = -128LSB ... +127 LSB

To obtain the temperature value in °C the following calculation has to be performed:

(4.1)

$$T[°C] = \frac{2 \cdot T[LSB] + 34.54}{1.3815}$$

### 4.3.3 Checksum Nibble Details

The checksum nibble is a 4-bit CRC of the data nibbles including the status nibble. The CRC is calculated using a polynomial $x^4+x^3+x^2+1$ with a seed value of 0101B. The remainder after the last data nibble is transmitted as CRC.

Depending on SPC frame configuration, different options for the CRC calculation have to be considered:

**Short serial message disabled and rolling counter information as nibble:**
the input data for CRC calculation are: STATUS & DATA1 & DATA2 & DATA3 & ROLLING_COUNTER

**Rolling counter information is coded in the CRC (no explicit rolling counter nibble):**
The two LSBs of the rolling counter information is prepended to "00" and added to the input data of the CRC calculation (R1 R0 0 0). In this case, the rolling counter has only 2 bits.

**Short serial message enabled and rolling counter information transmitted as nibble:**
the sensor ID is coded in the CRC: the two bit value of the ID on LSB position is appended to “00” and added to the input data of the CRC calculation (0 0 ID1 ID0)

**Short serial message enabled and the rolling counter information coded in the CRC:**
the two bit value of the ID on LSB position is appended to the 2LSB value of the rolling counter on MSB position and added to the input data of the CRC calculation (R1 R0 ID1 ID0). In this case, the rolling counter has only 2 bits.

chanhvinh.com



## 4.4 SENT

SENT Interface: A standardized, uni-directional digital protocol. The information is coded in nibbles with different length. One nibble contains 4 bit of information. Beside the angle information also a status information and a CRC is transmitted.

The SENT protocol is implemented according to the standard SAE J2716 JAN2010. The unit time UT is configurable according to Table 4-9.

**Table 4-9 SENT unit times**

| Parameter | Symbol | Values | | | Unit | Note / Test Condition |
|---|---|---|---|---|---|---|
| | | Min. | Typ. | Max. | | |
| SENT unit time | UT | 1.5 | | 3.0 | µs | configurable in steps of 0.5µs. tolerance given by clock tolerance |

Two different sensor configurations are possible:

**Single Secure Sensor:**

The protocol consists of following nibbles

- A synchronization period (56UT)
- A status nibble of 12-27 UT
- 3 data nibbles of 12-27 UT, transmitting a 12bit angle value
- 2 nibbles with a 8bit rolling counter information
- 1 nibble as the inverted 1st data nibble
- A CRC nibble of 12-27 UT
- A pause pulse, this is optional and can be deactivated
- A short serial message, this is optional and can be deactivated

**Standard Sensor:**

The protocol consists of following nibbles

- A synchronization period (56UT)
- A status nibble of 12-27 UT
- 3 data nibbles of 12-27 UT, transmitting a 12bit angle value
- A CRC nibble of 12-27 UT
- A pause pulse, this is optional and can be deactivated
- A short serial message, this is optional and can be deactivated

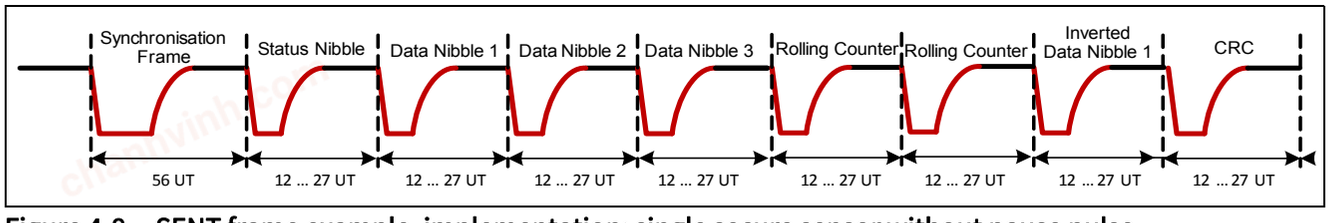


**Figure 4-8 SENT frame example, implementation: single secure sensor without pause pulse**

chanhvinh.com



The nibble low time $t_{low}$ can be configured to be 3UT or 5UT. This can reduce the overall frame length. The low time includes the fall time of the edge, therefore it has to be ensured that the fall time of the edge is fast enough to reach the low level within the configured low time (Figure 4-9).

Note: A nibble low time of 3UT is not compliant with the SENT standard SAE J2716 JAN2010.

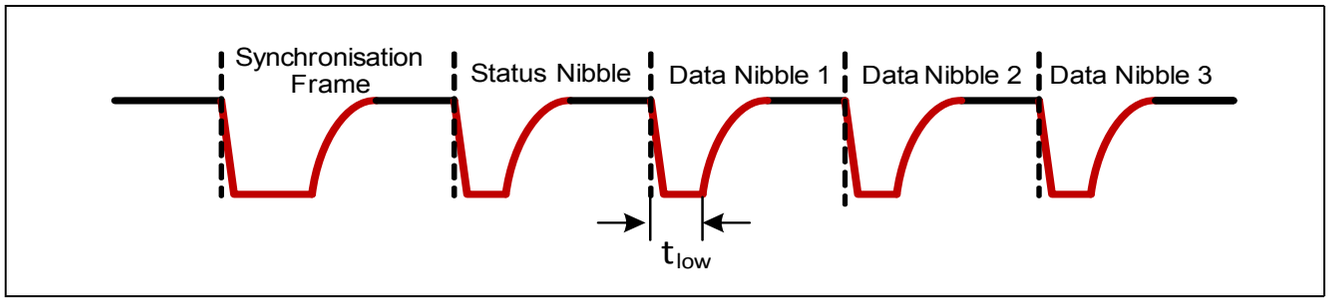


**Figure 4-9 SENT nibble low time**

### Rolling counter

This 8bit counter counts the number of transmitted frames with rollover back to 0 and increment with each message. This counter is for verification in the ECU that no frame is missed or that no frame is sent repeatedly from the sensor. The rolling counter nibbles are sent after the 3rd data nibble.

### SENT data range and error indication

There are two options for the data range and error indication.

- 0°... 360° are mapped to 12bit, i.e. 0... 4095. This information is coded in the three data nibbles. In case of an internal chip error or a start-up error (BIST error), the status bit [0] of the status nibble is set. An angle value is transmitted but might not be valid due to the occurred error.
- 0° ... 360° are mapped to 1 ... 4088. In case of an internal sensor error or start-up error (BIST error), the message “4091” is transmitted and the status bit [0] of the status nibble is set. In case the sensor performs a reset, the first transmitted status nibble has the status bit [0] set but a valid angle value (within the range 0... 4088) is transmitted with the 3 data nibbles.

**Table 4-10 Structure of SENT status nibble**

| Bits | Description |
|---|---|
| [0] LSB | error indication or start-up (BIST) error or sensor reset |
| [1] | reserved |
| [2] | short serial message bit (data bit) |
| [3] MSB | short serial message bit (start indication) |

## 4.4.1 Checksum Nibble Details

The checksum nibble is a 4-bit CRC of the data nibbles and is not including the status nibble. The CRC is calculated using a polynomial $x^4+x^3+x^2+1$ with a seed value of 0101B. The remainder after the last data nibble is transmitted as CRC.

## 4.4.2 SENT Features

### Pause Pulse

There is an optional pause pulse which can be activated or deactivated via corresponding bits in the EEPROM. The pause pulse is implemented in a way that the total frame length is adjusted to 282UT (for option with 6 data nibbles, single secure sensor) or 203UT (3 data nibbles, standard sensor).

chanhvinh.com



### Short Serial Message

The short serial message is an additional option which can be enabled and disabled. The short serial message provides additional information in a slow channel transmitting a 8bit temperature value, a 16bit word containing angle base & rotation direction information and a 32bit sensor ID.

In each SENT frame, one bit of information is transmitted. The start of the short serial message is indicated by a “1” in bit [3] of the status nibble. For the next 15 SPC frames, this bit will contain a “0”. Information is transmitted in blocks of 16bit with 1 bit per SENT frame in bit [2] of the status nibble.

4 bit message ID

8 bit data

4bit CRC (calculated from message ID and data bits)

The message ID is used for identification of the type of data received. All data are transmitted in the bit [2] of the status nibble in the order MSB to LSB.

The transmitted information is as follows:

Message -ID 0: 8bit temperature value starting with MSB

Message -ID 1: 8bit of angle base (starting with MSB) address 0x00A0, bit [15:8]

Message -ID 2: 8bit of angle base (starting with MSB-8) address 0x00A0, bit [7:0]

Message -ID 3: 8bit temperature value starting with MSB

Message -ID 4: 8bit of sensor ID1 (starting with MSB) address 0x00F2, bit [15:8]

Message -ID 5: 8bit of sensor ID1 (starting with MSB-8) address 0x00F2, bit [7:0]

Message -ID 6: 8bit of sensor ID2 (starting with MSB) address 0x00F4, bit [15:8]

Message -ID 7: 8bit of sensor ID2 (starting with MSB-8) address 0x00F4, bit [7:0]

Message -ID 8 to Message -ID 15: Message -ID 0 to Message -ID 7 will be repeated

#### 4.4.2.1 Temperature Calculation

The temperature information which is transmitted with the short serial message is an 8-bit value. It has to be considered as a two-complement ranging from T[LSB] = -128LSB ... +127 LSB

To obtain the temperature value in °C the following calculation has to be performed:

(4.2)

$$T[°C] = \frac{2 \cdot T[LSB] + 34.54}{1.3815}$$

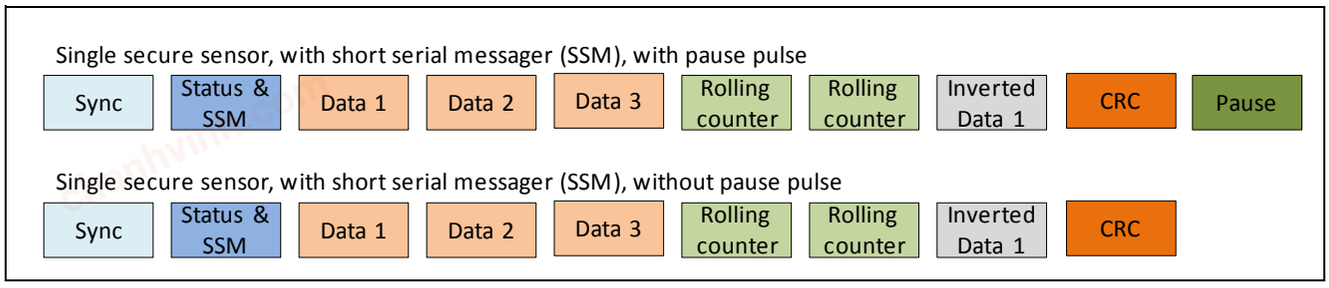


**Figure 4-10 SENT protocol**

chanhvinh.com



## 4.5 SICI Interface

A single wire interface (SICI) which is on the same output pin as the SENT/SPC and PWM output, is implemented. This interface is used to perform the EEPROM programming with application and customer specific data (angle base, look-up table, customer-ID). In addition, some chip configuration can be done. Further details can be found in the corresponding user manual.

chanhvinh.com



# 5 End of Line Configuration

Several parameters can be programmed via the single wire interface SICI end of line. No additional programming pin is required, programming is performed via the output pin. Further details can be found in the corresponding user manual.

## 5.1 Angle Base and Rotation Direction

An angle base value can be stored in the EEPROM. The output angle value is then referenced to this angle base. It is also possible to define the rotation direction, i.e. for a given magnet rotation direction the output angle value can either be selected to increase or decrease.

## 5.2 Customer ID

A total storage of 112bits in the EEPROM is reserved for customer specific data (e.g. customer module ID, etc...). This data can be written via SICI interface. The read-out of the first 32bits of this data can be done with the short serial message feature during operation as a slow message (only SENT and SPC interface). The remaining 80bits can only be addressed via SICI and are not asccessible during operation.

## 5.3 Look-up Table

To increase the sensor performance and angle accuracy, a look-up table with 32 points can optionally be used. Non-linearity errors coming for example from a misaligned magnetic circuit can thus be compensated. It is necessary to have an external angle reference for this calibration. The sensor output values at predefined, precise positions (0°, 11.25°, 22.5°, ...), given by the external reference, have to be determined. These 32 values are stored in the corresponding EEPROM registers. The sensor performs a linear interpolation between these reference points for the output value.

chanhvinh.com



# 6 Pre-Configured Derivatives

Derivatives of the TLE5014 are available with different pre-configured register settings for specific application (“settings”). For each derivative with such settings, the interface type is locked and cannot be changed. Only the derivatives with such settings have been released for production by Infineon.

Other settings/parameters for other applications could be adjusted but such adjusted settings would not have been released for production by Infineon.

Furthermore, the available safety analysis and safety manual does only include these preconfigured derivatives.

## 6.1 TLE5014C16

The sensor has SPC as predefined interface which is locked and cannot be changed.

The predefined SPC configuration of TLE5014C16 is shown below:

**Table 6-1 SPC Derivative Configuration TLE5014C16**

| Interface | SPC unit time | SPC low time | SPC Trigger | Short Serial Message |
|---|---|---|---|---|
| SPC | 2.5µs | 5UT | constant 90UT | enabled |

**Table 6-2 SPC Derivative Configuration TLE5014C16**

| Rolling Counter | Rolling Counter in CRC | Look-up Table | SPC ID | Output driver |
|---|---|---|---|---|
| enabled | disabled | enabled, preconfigured | $00_B$ | open drain w/ controlled slope |

Following parameters and values are allowed to modify:

- SPC unit time: 1.5µs / 2.5µs
- Short serial message: enable / disable
- Rolling counter in CRC: enable /disable
- SPC ID: 0 / 1 / 2 / 3

## 6.2 TLE5014S16

The sensor has SENT as predefined interface which is locked and cannot be changed.

The predefined SENT configuration of TLE5014S16 is shown below:

**Table 6-3 SENT Derivative Configuration TLE5014S16**

| Interface | SENT unit time | SENT low time | SENT Protocol Type | Short Serial Message |
|---|---|---|---|---|
| SENT | 3.0µs | 5UT | single secure sensor | enabled |

**Table 6-4 SENT Derivative Configuration TLE5014S16**

| SENT Error Indication | SENT Data Range | Pause Pulse | Look-up Table | Output driver |
|---|---|---|---|---|
| error code 4091 enabled | 1 ... 4088 | enabled | enabled, preconfigured | push/pull |

Following parameters and values are allowed to modify:

- Short serial message: enable / disable
- Pause pulse: enable /disable

chanhvinh.com



Pre-Configured Derivatives

- SENT Protocol Type: Standard / Single Secure Sensor
- SENT Error Indication: enable (data range: 1 ... 4088 , error code: 4091) / disable (data range: 0 ... 4095, no error code)

## 6.3 TLE5014P16

The sensor has PWM as predefined interface which is locked and cannot be changed.

**Table 6-5 PWM Derivative Configuration TLE5014P16**

| Interface | PWM Frequency | PWM Data Range | PWM Fault indication | PWM BIST Error or Reset Indication |
|---|---|---|---|---|
| PWM | 200Hz | 12.5% ... 87.5% | 5% | 95% |

**Table 6-6 PWM Derivative Configuration TLE5014P16**

| PWM Starting Level | Look-up Table | Output driver |
|---|---|---|
| high (rising edge) | enabled, preconfigured | push/pull |

- To be compliant with the existing safety analysis no change of above parameters is allowed unless authorized by Infineon

chanhvinh.com



# 7 Package Information

The device is qualified with a MSL level of 3. It is halogen free, lead free and RoHS compliant.

## 7.1 Package Parameters

**Table 7-1 Package Parameters**

| Parameter | Symbol | Limit Values | | | Unit | Notes |
|---|---|---|---|---|---|---|
| | | Min. | Typ. | Max. | | |
| Thermal resistance | $R_{thJA}$ | | | 150 | K/W | Junction to air[1)] |
| | $R_{thJC}$ | | | 45 | K/W | Junction to case |
| | $R_{thJL}$ | | | 70 | K/W | Junction to lead |
| Moisture Sensitively Level | MSL 3 | | | | | 260°C[2)] |
| Lead Frame | Cu | | | | | |
| Plating | Sn 100% | | | | | > 7 µm |

1) according to Jedec JESD51-7

2) suitable for reflow soldering with soldering profiles according to JEDEC J-STD-020E (December 2014)

**Table 7-2 Position of the die in the package**

| Parameter | Symbol | Limit Values | | | Unit | Notes |
|---|---|---|---|---|---|---|
| | | Min. | Typ. | Max. | | |
| Tilt | | | | 3 | ° | in respect to the z-axis and reference plane (see Figure 7-1), |
| Rotational displacement | | | | 3 | ° | in respect to the reference axis (see Figure 7-1) |
| Placement tolerance in package | | | | 100 | µm | in x and y direction |

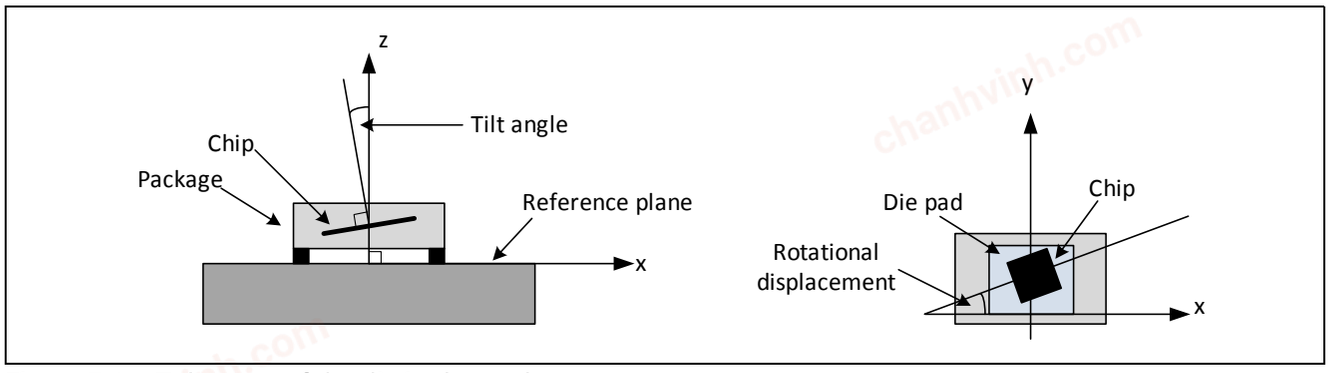


**Figure 7-1 Tolerance of the die in the package**

The active area of the GMR sensing element is 360µm x 470µm.

It has to be ensured that a magnet is used which has sufficient size to provide a homogeneous magnetic field over the total sensing element area. For a practical application design this means that the magnet has to be

chanhvinh.com



large enough to ensure that the non-homogeneity of the magnetic field in this area (plus relevant positioning tolerances) is negligible.

chanhvinh.com



## 7.2 Package Outline

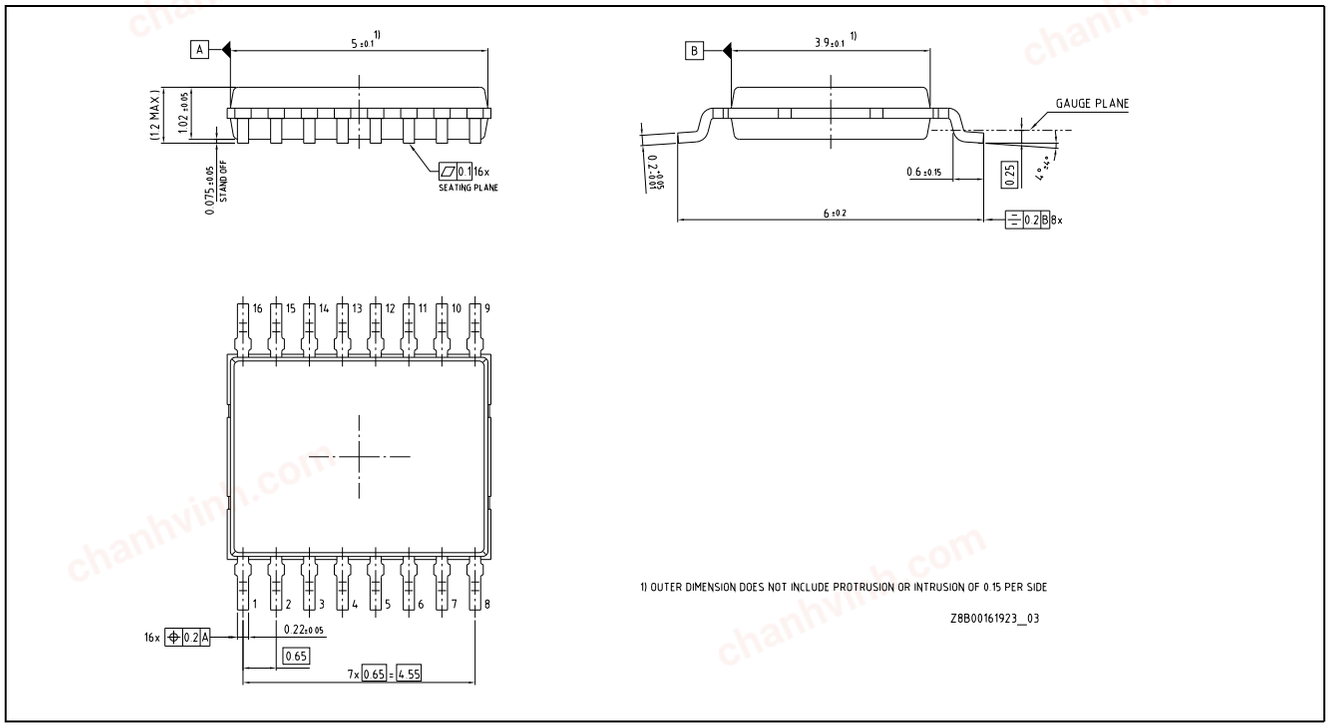


**Figure 7-2 PG-TDSO-16 package dimension**

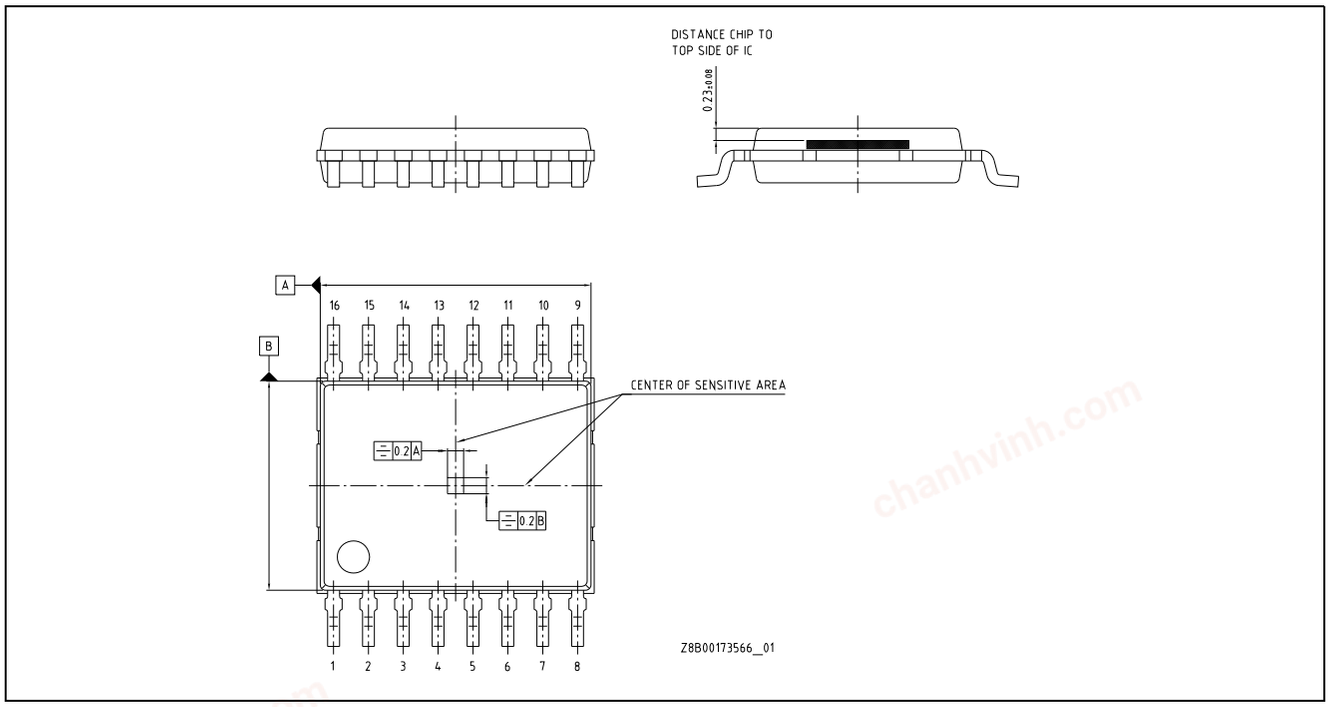


**Figure 7-3 Position of sensing element**

chanhvinh.com



## 7.3 Footprint

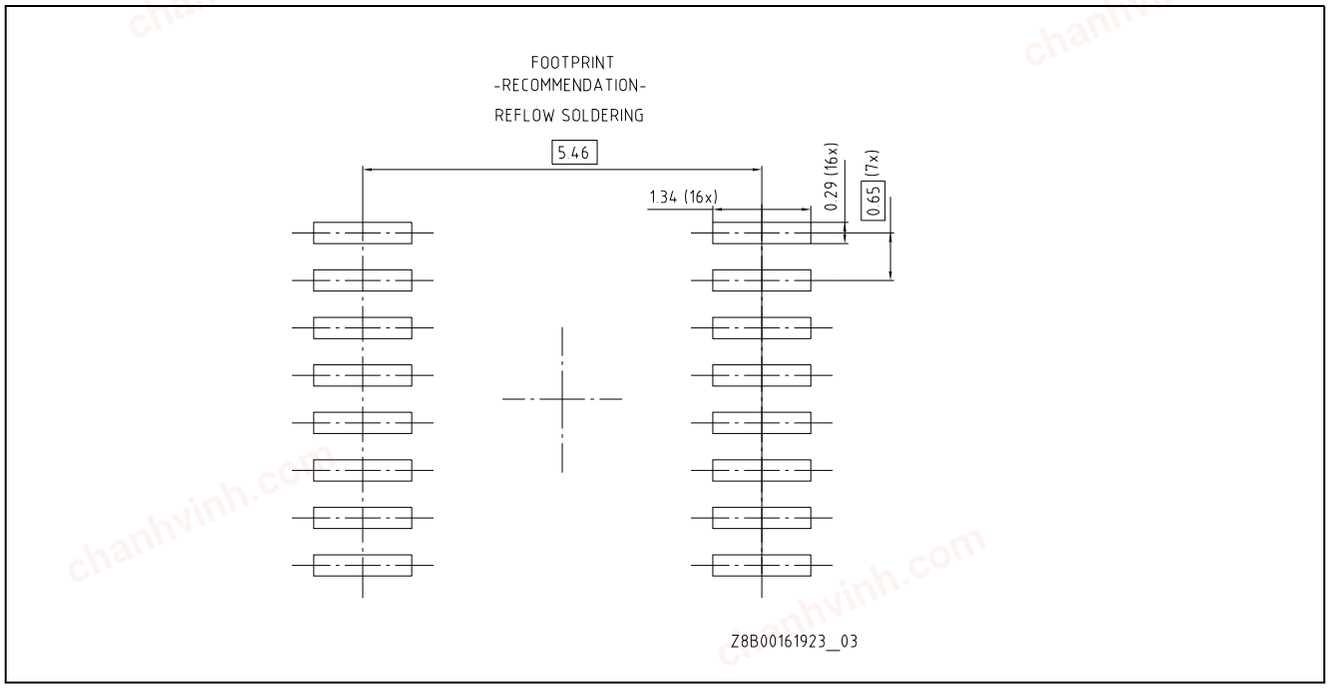


Figure 7-4 Footprint of PG TDSO-16

## 7.4 Packing

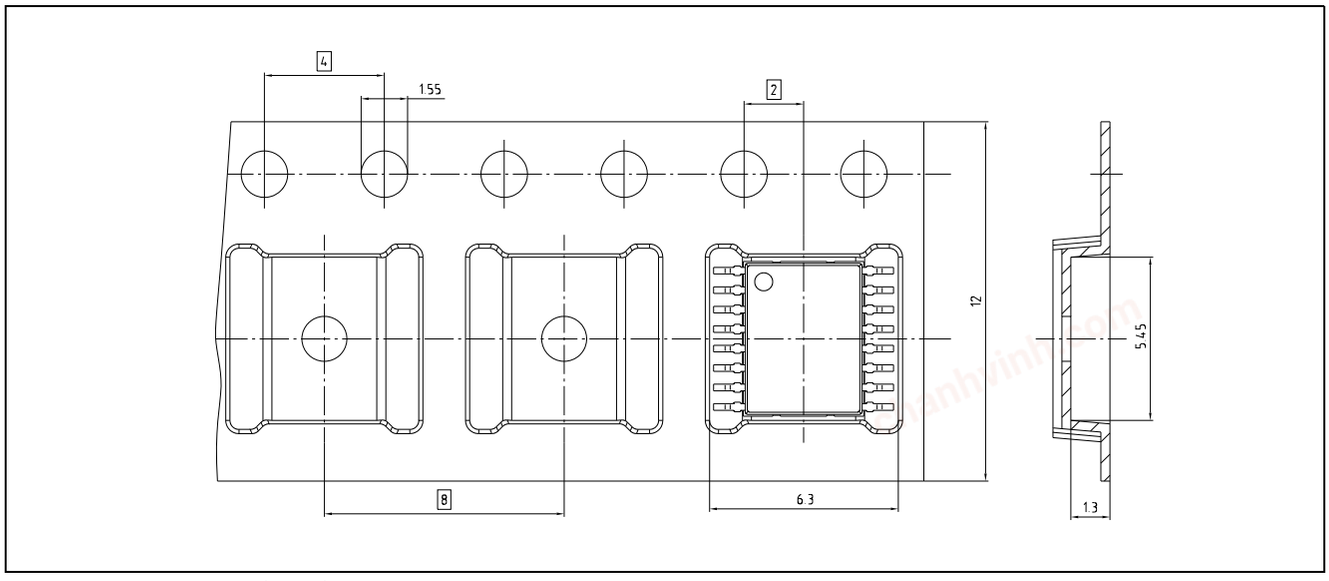


Figure 7-5 Tape and Reel

chanhvinh.com



## 7.5 Marking

| Position | Marking | Description |
|---|---|---|
| 1st Line | Gxxxx | G: green, 4-digit date code: YYWW<br>e.g. “1801”: 1st week in 2018 |
| 2nd Line | xxxxxxxx | Interface type and version |
| 3rd Line | xxx | Lot code |

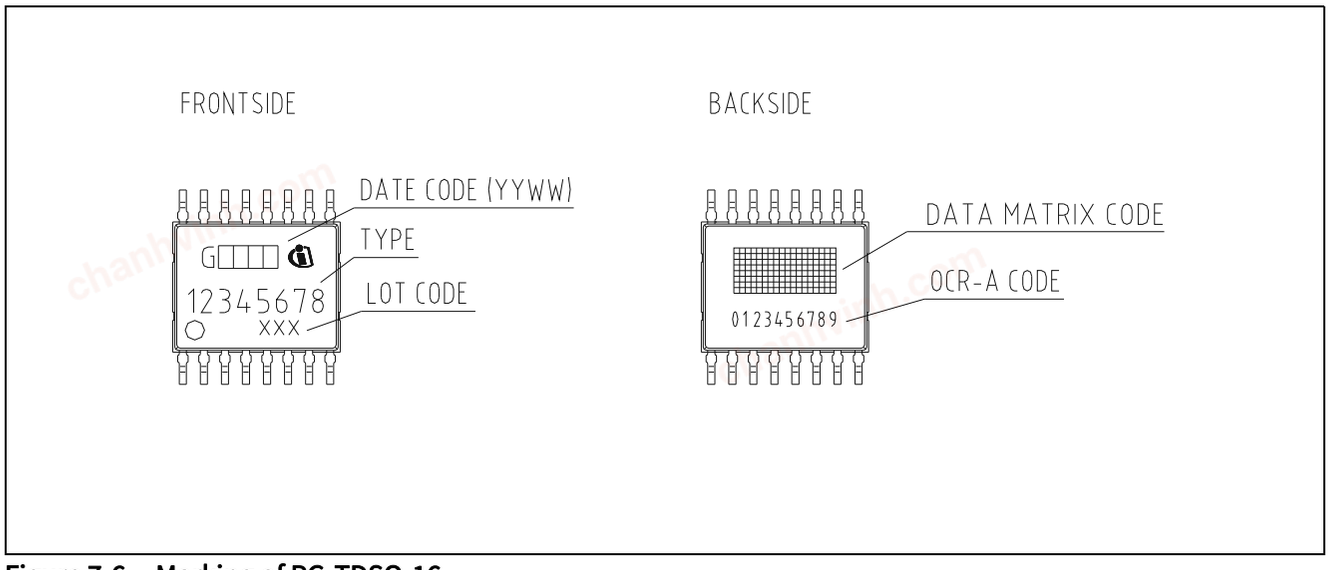


**Figure 7-6 Marking of PG-TDSO-16**

chanhvinh.com



# 8 Revision History

| Revision | Date | Changes |
|---|---|---|
| 1.0 | 2018-03-27 | initial version |
| | | |
| | | |
| | | |
| | | |
| | | |
| | | |
| | | |
| | | |
| | | |

chanhvinh.com

**Trademarks of Infineon Technologies AG**

µHVIC™, µIPM™, µPFC™, AU-ConvertIR™, AURIX™, C166™, CanPAK™, CIPOS™, CIPURSE™, CoolDP™, CoolGaN™, COOLiR™, CoolMOS™, CoolSET™, CoolSiC™, DAVE™, DI-POL™, DirectFET™, DrBlade™, EasyPIM™, EconoBRIDGE™, EconoDUAL™, EconoPACK™, EconoPIM™, EiceDRIVER™, eupec™, FCOS™, GaNpowIR™, HEXFET™, HITFET™, HybridPACK™, iMOTION™, IRAM™, ISOFACE™, IsoPACK™, LEDrivIR™, LITIX™, MIPAQ™, ModSTACK™, my-d™, NovalithIC™, OPTIGA™, OptiMOS™, ORIGA™, PowIRaudio™, PowIRStage™, PrimePACK™, PrimeSTACK™, PROFET™, PRO-SIL™, RASIC™, REAL3™, SmartLEWIS™, SOLID FLASH™, SPOC™, StrongIRFET™, SupIRBuck™, TEMPFET™, TRENCHSTOP™, TriCore™, UHVIC™, XHP™, XMC™.

Trademarks updated November 2015

**Other Trademarks**

All referenced product or service names and trademarks are the property of their respective owners.

**Edition 2018-04-04**
**Published by**
**Infineon Technologies AG**
**81726 Munich, Germany**

**© 2018 Infineon Technologies AG.**
**All Rights Reserved.**

**Do you have a question about any aspect of this document?**

**Email:** erratum@infineon.com

**IMPORTANT NOTICE**

The information given in this document shall in no event be regarded as a guarantee of conditions or characteristics ("Beschaffenheitsgarantie").

With respect to any examples, hints or any typical values stated herein and/or any information regarding the application of the product, Infineon Technologies hereby disclaims any and all warranties and liabilities of any kind, including without limitation warranties of non-infringement of intellectual property rights of any third party.

In addition, any information given in this document is subject to customer's compliance with its obligations stated in this document and any applicable legal requirements, norms and standards concerning customer's products and any use of the product of Infineon Technologies in customer's applications.

The data contained in this document is exclusively intended for technically trained staff. It is the responsibility of customer's technical departments to evaluate the suitability of the product for the intended application and the completeness of the product information given in this document with respect to such application.

For further information on technology, delivery terms and conditions and prices, please contact the nearest Infineon Technologies Office (**www.infineon.com**).

**WARNINGS**

Due to technical requirements products may contain dangerous substances. For information on the types in question please contact your nearest Infineon Technologies office.

Except as otherwise explicitly approved by Infineon Technologies in a written document signed by authorized representatives of Infineon Technologies, Infineon Technologies' products may not be used in any applications where a failure of the product or any consequences of the use thereof can reasonably be expected to result in personal injury.