chanhvinh.com

TLE42644

Low Dropout Fixed Voltage Regulator

TLE42644G

Data Sheet

Rev. 1.1, 2014-07-03

Automotive Power

chanhvinh.com

Low Dropout Fixed Voltage Regulator **TLE42644G**

1 Overview

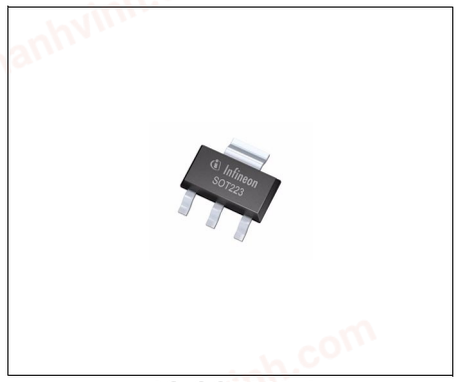

PG-SOT223-4

Features

- Output Voltage 5 V ± 2 % up to Output Currents of 50 mA
- Output Voltage 5 V ± 3 % up to Output Currents of 100 mA
- Very Low Dropout Voltage
- Very Low Current Consumption: typ. 40 µA
- Output Current Limitation
- Reverse Polarity Protection
- Overtemperature Shutdown
- Wide Temperature Range From -40 °C up to 150 °C
- Suitable for Use in Automotive Electronics
- Green Product (RoHS compliant)
- AEC Qualified

Description

The TLE42644 is a monolithic integrated low dropout fixed voltage regulator for load currents up to 100 mA. It is the 1-to-1 replacement product for the TLE4264-2. It is functional compatible to the TLE4264, but has a reduced quiescent current of typ. 40 µA. The TLE42644 is especially designed for applications requiring very low standby currents, e.g. with a permanent connection to the car's battery. The device is available in the small surface mounted PG-SOT223-4 package and is pin compatible to the TLE4264-2 and the TLE4264. The device is designed for the harsh environment of automotive applications. Therefore it is protected against overload, short circuit and overtemperature conditions by the implemented output current limitation and the overtemperature shutdown circuit. The TLE42644 can be also used in all other applications requiring a stabilized 5 V voltage.

An input voltage up to 45 V is regulated to $V_{Q,nom}$ = 5 V with a precision of ±3 %. An accuracy of ±2 % is kept for load currents up to 50 mA.

Type	Package	Marking
TLE42644G	PG-SOT223-4	42644

chanhvinh.com

2 Block Diagram

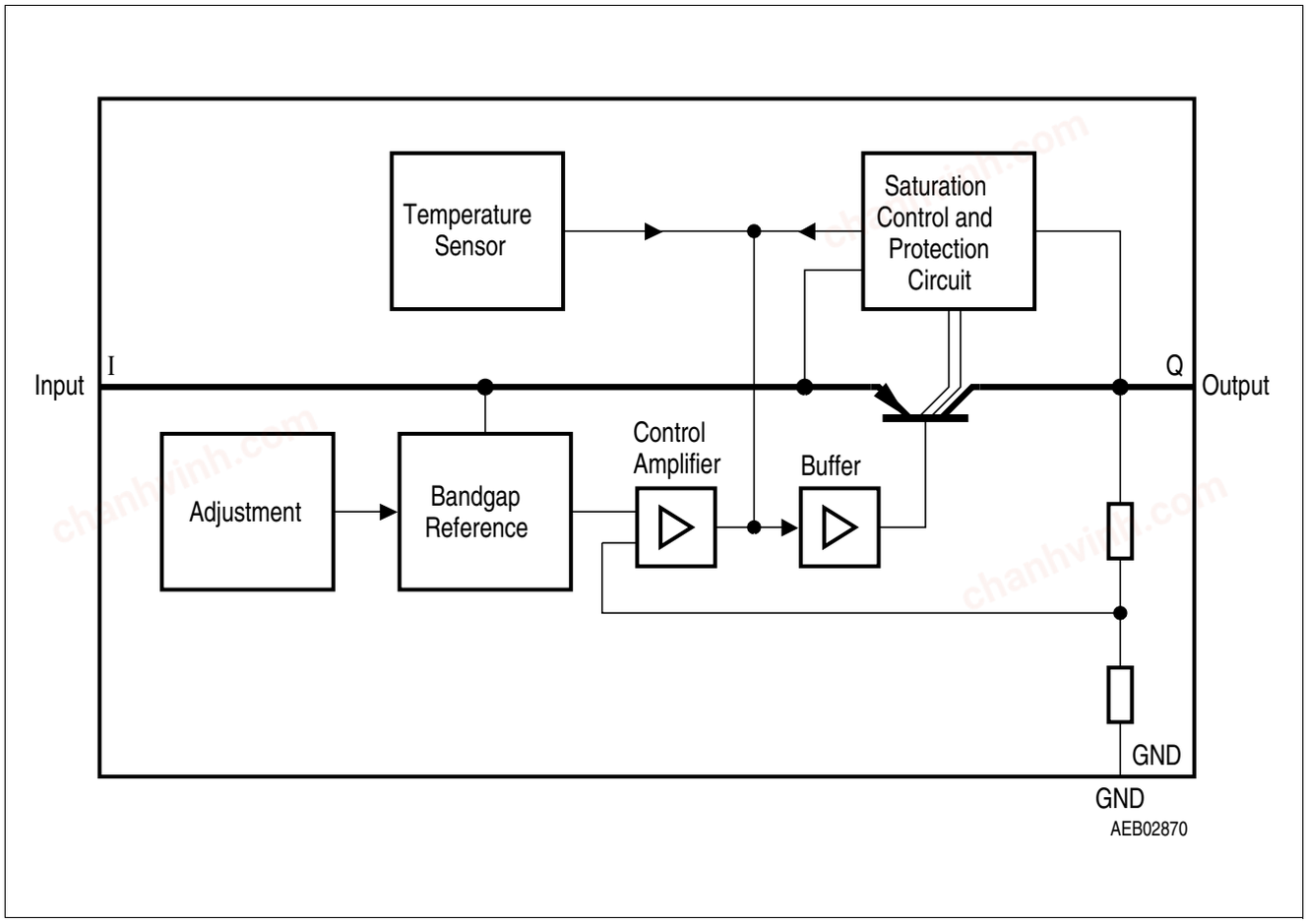

Figure 1 Block Diagram

chanhvinh.com

3 Pin Configuration

3.1 Pin Assignment PG-SOT223-4

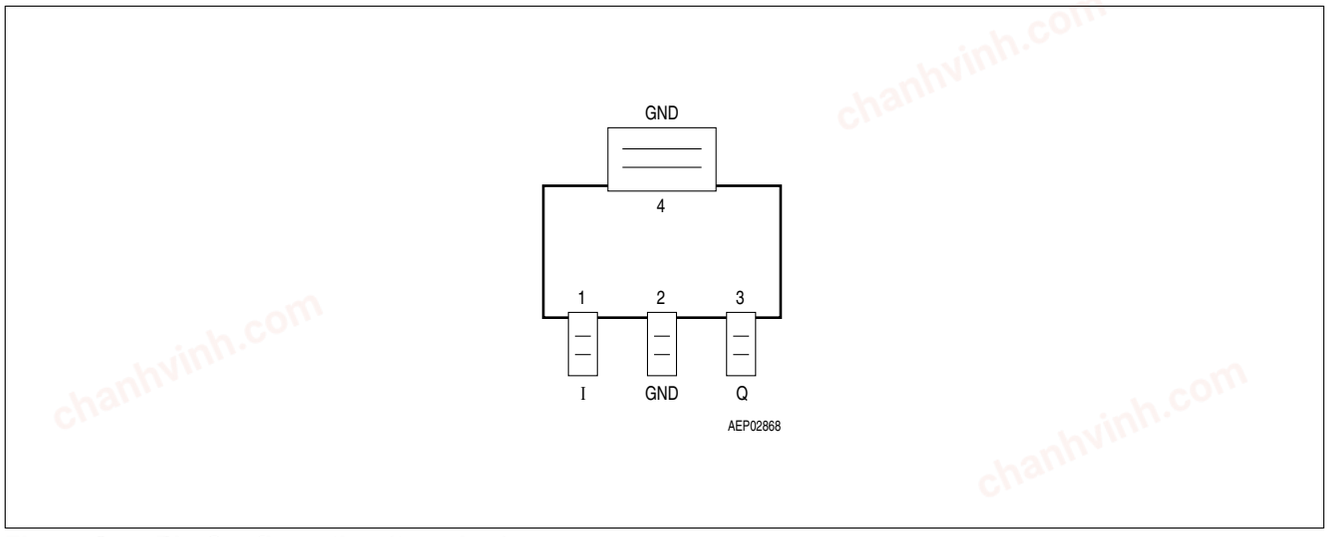

Figure 2 Pin Configuration (top view)

3.2 Pin Definitions and Functions PG-SOT223-4

Pin No.	Symbol	Function
1	I	**Input** block to ground directly at the IC with a ceramic capacitor
2	GND	**Ground**
3	Q	**Output** block to ground with a capacitor close to the IC terminals, respecting the values given for its capacitance and ESR in **“Functional Range” on Page 5**
4 / Heat Slug	GND	**Ground / Heat Slug** internally connected to leadframe and GND; connect to GND and heatsink area

chanhvinh.com

4 General Product Characteristics

4.1 Absolute Maximum Ratings

Table 1 Absolute Maximum Ratings[1)]

T_j = -40 °C to 150 °C; all voltages with respect to ground, (unless otherwise specified)

Parameter	Symbol	Values			Unit	Note / Test Condition	Number
		Min.	Typ.	Max.			
Input I							
Voltage	V_I	-30	–	45	V	–	P_4.1.1
Output Q							
Voltage	V_Q	-0.3	–	32	V	–	P_4.1.2
Temperature							
Junction temperature	T_j	-40	–	150	°C	–	P_4.1.3
Storage temperature	T_{stg}	-50	–	150	°C	–	P_4.1.4
ESD Susceptibility							
ESD Absorption	$V_{ESD,HBM}$	-3	–	3	kV	Human Body Model (HBM)[2)]	P_4.1.5
ESD Absorption	$V_{ESD,CDM}$	-1500	–	1500	V	Charge Device Model (CDM)[3)] at all pins	P_4.1.6

1) not subject to production test, specified by design
2) ESD susceptibility Human Body Model “HBM” according to AEC-Q100-002 - JESD22-A114
3) ESD susceptibility Charged Device Model “CDM” according to ESDA STM5.3.1

Notes

1. *Stresses above the ones listed here may cause permanent damage to the device. Exposure to absolute maximum rating conditions for extended periods may affect device reliability.*
2. *Integrated protection functions are designed to prevent IC destruction under fault conditions described in the data sheet. Fault conditions are considered as “outside” normal operating range. Protection functions are not designed for continuous repetitive operation.*

4.2 Functional Range

Table 2 Functional Range

Parameter	Symbol	Values			Unit	Note / Test Condition	Number
		Min.	Typ.	Max.			
Input voltage	V_I	5.5	–	40	V	–	P_4.2.1
Output Capacitor’s Requirements for Stability	C_Q	10	–	–	µF	–	P_4.2.2

chanhvinh.com

Table 2 Functional Range (cont'd)

Parameter	Symbol	Values			Unit	Note / Test Condition	Number
		Min.	Typ.	Max.			
Output Capacitor's Requirements for Stability	$ESR(C_Q)$	–	–	2	Ω	1)	P_4.2.3
Junction temperature	T_j	-40	–	150	°C	–	P_4.2.4

1) relevant ESR value at f = 10 kHz

Note: Within the functional or operating range, the IC operates as described in the circuit description. The electrical characteristics are specified within the conditions given in the Electrical Characteristics table.

4.3 Thermal Resistance

*Note: This thermal data was generated in accordance with JEDEC JESD51 standards. For more information, go to **www.jedec.org**.*

Table 3 Thermal Resistance

Parameter	Symbol	Values			Unit	Note / Test Condition	Number
		Min.	Typ.	Max.			
TLE42644G (PG-SOT223-4)							
Junction to Case[1)]	R_{thJC}	–	17	–	K/W	measured to heat slug	P_4.3.1
Junction to Ambient[1)]	R_{thJA}	–	54	–	K/W	FR4 2s2p board[2)]	P_4.3.2
Junction to Ambient[1)]	R_{thJA}	–	139	–	K/W	FR4 1s0p board, footprint only[3)]	P_4.3.3
Junction to Ambient[1)]	R_{thJA}	–	73	–	K/W	FR4 1s0p board, 300 mm² heatsink area[3)]	P_4.3.4
Junction to Ambient[1)]	R_{thJA}	–	64	–	K/W	FR4 1s0p board, 600 mm² heatsink area[3)]	P_4.3.5

1) Not subject to production test, specified by design.

2) Specified R_{thJA} value is according to Jedec JESD51-2,-5,-7 at natural convection on FR4 2s2p board; The Product (Chip+Package) was simulated on a 76.2 x 114.3 x 1.5 mm³ board with 2 inner copper layers (2 x 70µm Cu, 2 x 35µm Cu). Where applicable a thermal via array under the exposed pad contacted the first inner copper layer.

3) Specified R_{thJA} value is according to Jedec JESD 51-3 at natural convection on FR4 1s0p board; The Product (Chip+Package) was simulated on a 76.2 × 114.3 × 1.5 mm^3 board with 1 copper layer (1 x 70µm Cu).

chanhvinh.com

5 Electrical Characteristics

5.1 Electrical Characteristics Voltage Regulator

Table 4 Electrical Characteristics

V_I = 13.5 V; T_j = -40 °C to 150 °C; all voltages with respect to ground (unless otherwise specified)

Parameter	Symbol	Values			Unit	Note / Test Condition	Number
		Min.	Typ.	Max.			
Output Q							
Output Voltage	V_Q	4.9	5.0	5.1	V	5 mA < I_Q< 50 mA 6 V < V_I < 16 V	P_5.1.1
Output Voltage	V_Q	4.85	5.0	5.15	V	5 mA < I_Q<100 mA 6 V < V_I < 21 V	P_5.1.2
Output Voltage At Low Output Currents	V_Q	4.80	5.0	5.20	V	100 µA < I_Q<5 mA 6 V < V_I < 21 V	P_5.1.3
Dropout Voltage	V_{dr}	–	220	500	mV	I_Q = 100 mA V_{dr} = V_I – V_Q [1]	P_5.1.4
Load Regulation	$\Delta V_{Q, lo}$	–	50	90	mV	I_Q = 1 mA to 100 mA V_I = 13.5 V	P_5.1.5
Line Regulation	$\Delta V_{Q, li}$	–	5	30	mV	V_I = 6 V to 28 V I_Q = 1 mA	P_5.1.6
Output Current Limitation	I_Q	150	200	500	mA	[1]	P_5.1.7
Power Supply Ripple Rejection[2]	$PSRR$	–	68	–	dB	f_r = 100 Hz; V_r = 0.5 Vpp	P_5.1.8
Overtemperature Shutdown Threshold	$T_{j,sd}$	151	–	200	°C	T_j increasing	P_5.1.9
Overtemperature Shutdown Threshold Hysteresis	$T_{j,sdh}$	–	25	–	°C	T_j decreasing	P_5.1.10
Current Consumption							
Quiescent Current I_q = I_I – I_Q	I_q	–	40	60	µA	I_Q = 100 µA, T_j < 85 °C	P_5.1.11
Quiescent Current I_q = I_I – I_Q	I_q	–	40	70	µA	I_Q = 100 µA	P_5.1.12
Current Consumption I_q = I_I – I_Q	I_q	–	1.7	4	mA	I_Q = 50 mA	P_5.1.13

1) Measured when the output voltage V_Q has dropped 100 mV from the nominal value obtained at V_I = 13.5 V.

2) not subject to production test, specified by design

chanhvinh.com

5.2 Typical Performance Characteristics Voltage Regulator

Current Consumption I_q versus Output Current I_Q

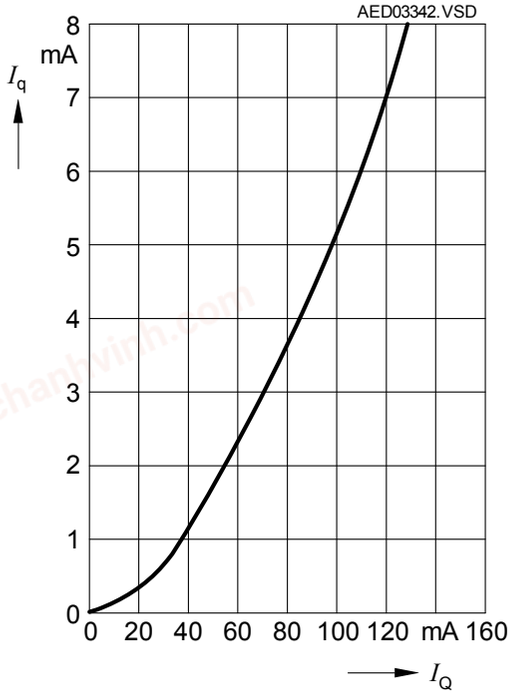

Current Consumption I_q versus Low Output Current I_Q

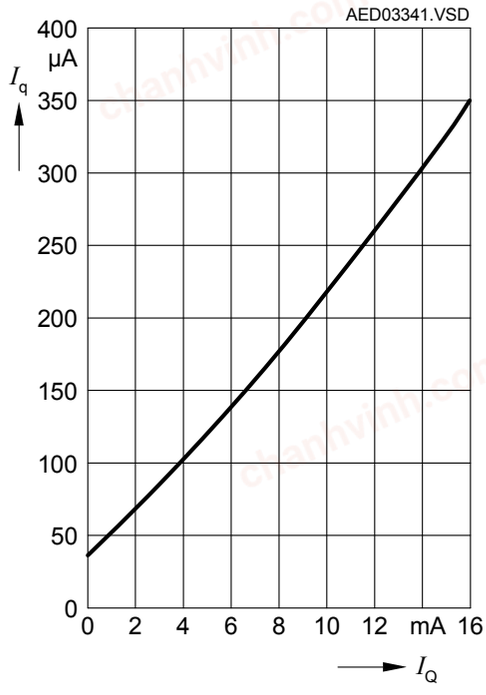

Output Voltage Variation ΔV_Q versus Junction Temperature T_J

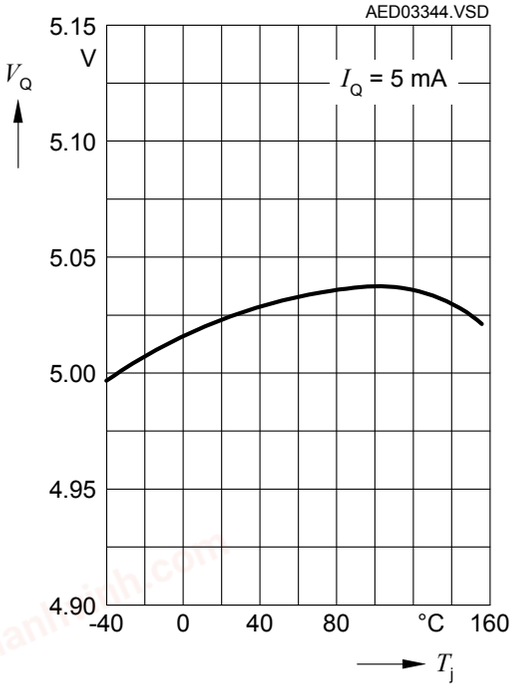

Dropout Voltage V_{dr} versus Output Current I_Q

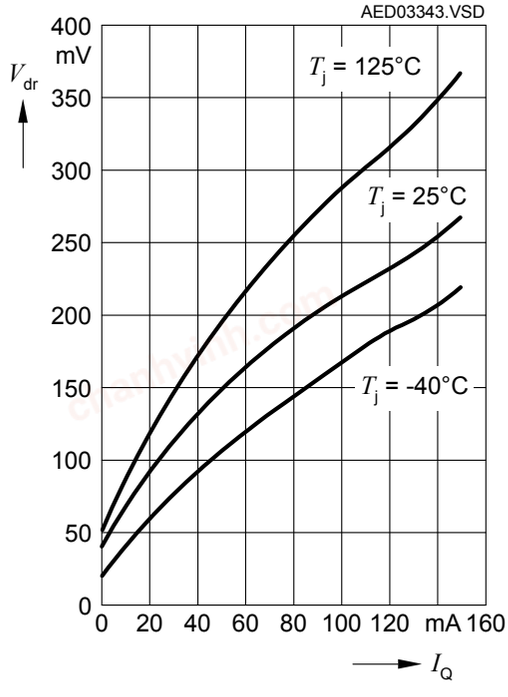

chanhvinh.com

Output Voltage V_Q versus Input Voltage V_I

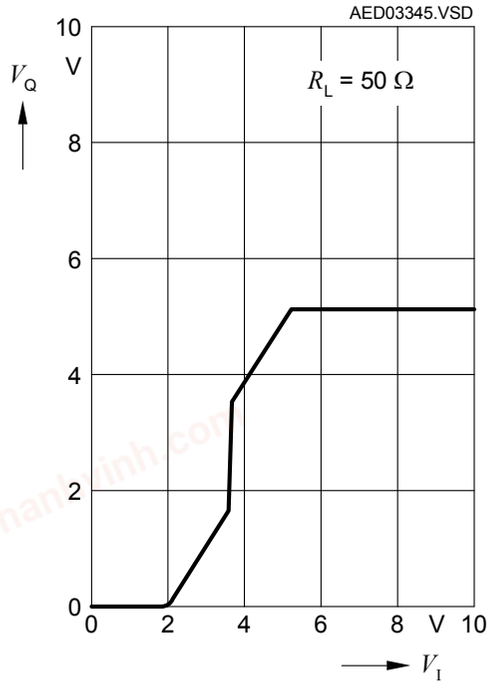

Maximum Output Current I_Q versus Input Voltage V_I

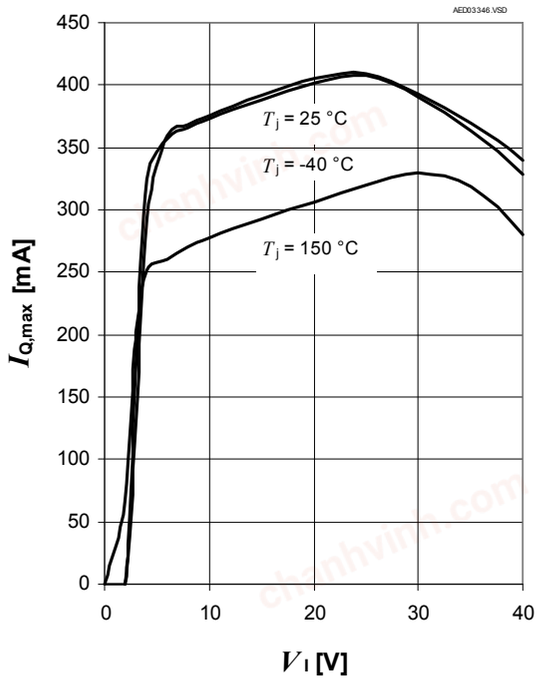

Region Of Stability: Output Capacitor's ESR $ESR(C_Q)$ versus Output Current I_Q

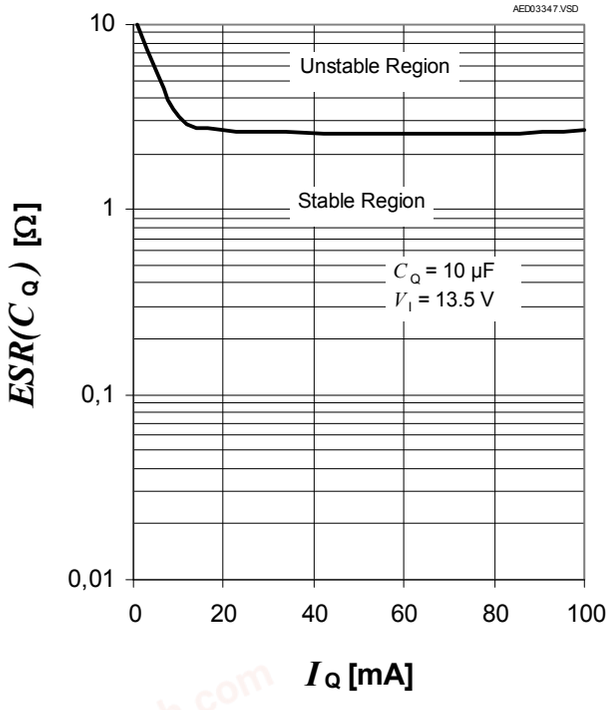

chanhvinh.com

6 Application Information

Note: The following information is given as a hint for the implementation of the device only and shall not be regarded as a description or warranty of a certain functionality, condition or quality of the device.

6.1 Application Diagram

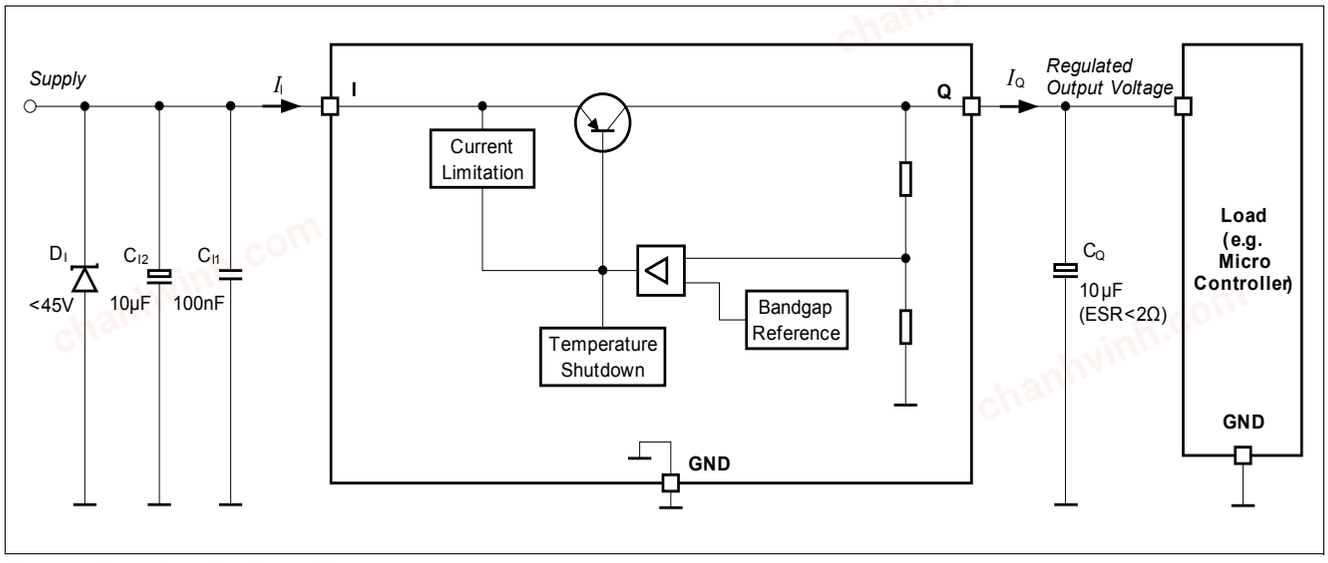

Figure 3 Application Diagram

6.2 Selection of External Components

6.2.1 Input Pin

The typical input circuitry for a linear voltage regulator is shown in the application diagram above.

A ceramic capacitor at the input, in the range of 100 nF to 470 nF, is recommended to filter out the high frequency disturbances imposed by the line e.g. ISO pulses 3a/b. This capacitor must be placed very close to the input pin of the linear voltage regulator on the PCB.

An aluminum electrolytic capacitor in the range of 10 µF to 470 µF is recommended as an input buffer to smooth out high energy pulses, such as ISO pulse 2a. This capacitor should be placed close to the input pin of the linear voltage regulator on the PCB.

An overvoltage suppressor diode can be used to further suppress any high voltage beyond the maximum rating of the linear voltage regulator and protect the device against any damage due to over-voltage.

The external components at the input are not mandatory for the operation of the voltage regulator, but they are recommended in case of possible external disturbances.

6.2.2 Output Pin

An output capacitor is mandatory for the stability of linear voltage regulators.

The requirement to the output capacitor is given in **“Functional Range” on Page 5**. The graph **“Region Of Stability: Output Capacitor’s ESR $ESR(C_Q)$ versus Output Current I_Q” on Page 9** shows the stable operation range of the device.

chanhvinh.com

TLE42644 is designed to be stable with extremely low ESR capacitors. According to the automotive environment, ceramic capacitors with X5R or X7R dielectrics are recommended.

The output capacitor should be placed as close as possible to the regulator's output and GND pins and on the same side of the PCB as the regulator itself.

In case of rapid transients of input voltage or load current, the capacitance should be dimensioned in accordance and verified in the real application that the output stability requirements are fulfilled.

6.3 Thermal Considerations

Knowing the input voltage, the output voltage and the load profile of the application, the total power dissipation can be calculated:

$$P_D = (V_I - V_Q) \times I_Q + V_I \times I_q \quad (1)$$

with

- P_D: continuous power dissipation
- V_I: input voltage
- V_Q: output voltage
- I_Q: output current
- I_q: quiescent current

The maximum acceptable thermal resistance R_{thJA} can then be calculated:

$$R_{thJA,\,max} = \frac{T_{j,\,max} - T_a}{P_D} \quad (2)$$

with

- $T_{j,max}$: maximum allowed junction temperature
- T_a: ambient temperature

Based on the above calculation the proper PCB type and the necessary heat sink area can be determined with reference to the specification in **"Thermal Resistance" on Page 6**.

Example

Application conditions:

V_I = 13.5 V

V_Q = 5 V

I_Q = 50 mA

T_a = 105 °C

Calculation of $R_{thJA,max}$:

$P_D = (V_I - V_Q) \bullet I_Q + V_I \bullet I_q$

= (13.5 V – 5 V) • 50 mA + 13.5 V • 4 mA

= 0.425 W + 0.054 W

= 0.479 W

chanhvinh.com

$R_{thJA,max}$ = ($T_{j,max}$ – T_a) / P_D
= (150 °C – 105 °C) / 0.479 W
= 93.9 K/W

As a result, the PCB design must ensure a thermal resistance R_{thJA} lower than 93.9 K/W. By considering TLE42644G (PG-SOT223-4 package) and according to **“Thermal Resistance” on Page 6**, at least 300 mm² heatsink area is needed on the FR4 1s0p PCB, or the FR4 2s2p board can be used.

6.4 Reverse Polarity Protection

TLE42644 is self protected against reverse polarity faults and allows negative supply voltage. External reverse polarity diode is not needed. However, the absolute maximum ratings of the device as specified in **“Absolute Maximum Ratings” on Page 5** must be kept.

The reverse voltage causes several small currents to flow into the IC hence increasing its junction temperature. As the thermal shut down circuitry does not work in the reverse polarity condition, designers have to consider this in their thermal design.

chanhvinh.com

7 Package Outlines

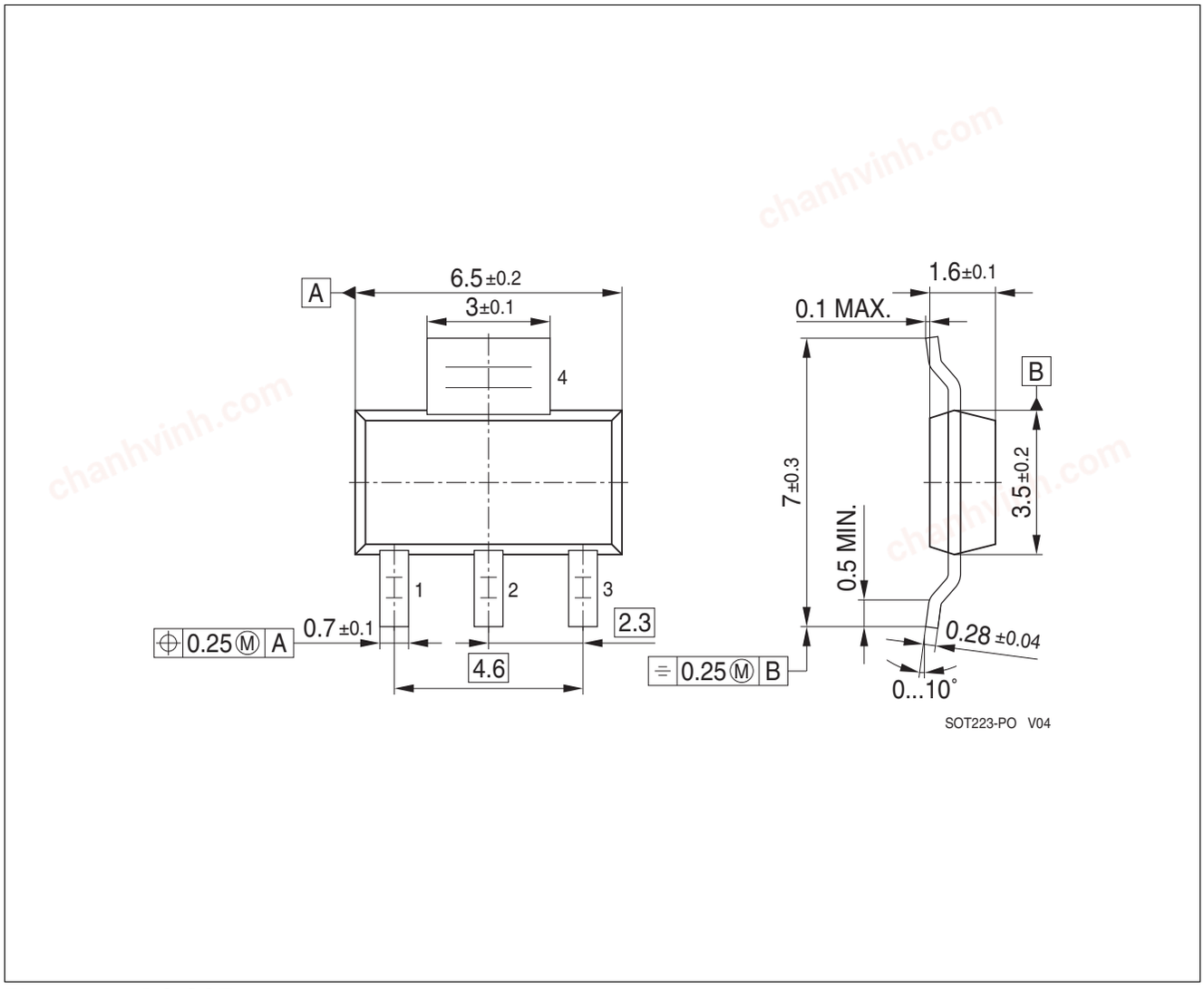

Figure 4 PG-SOT223-4

Green Product (RoHS compliant)

To meet the world-wide customer requirements for environmentally friendly products and to be compliant with government regulations the device is available as a green product. Green products are RoHS-Compliant (i.e Pb-free finish on leads and suitable for Pb-free soldering according to IPC/JEDEC J-STD-020).

For further information on alternative packages, please visit our website:
http://www.infineon.com/packages.

Dimensions in mm

chanhvinh.com

8 Revision History

Revision	Date	Changes
1.0	2009-06-26	initial version data sheet
1.01	2009-09-30	updated version data sheet; typing error corrected in **Table 1 “Absolute Maximum Ratings” on Page 5**: In **Voltage** min. value corrected from “-42V” to “-30V”
1.1	2014-07-03	Application information added

chanhvinh.com

Edition 2014-07-03

Published by
Infineon Technologies AG
81726 Munich, Germany

© 2014 Infineon Technologies AG
All Rights Reserved.

Legal Disclaimer

The information given in this document shall in no event be regarded as a guarantee of conditions or characteristics. With respect to any examples or hints given herein, any typical values stated herein and/or any information regarding the application of the device, Infineon Technologies hereby disclaims any and all warranties and liabilities of any kind, including without limitation, warranties of non-infringement of intellectual property rights of any third party.

Information

For further information on technology, delivery terms and conditions and prices, please contact the nearest Infineon Technologies Office (**www.infineon.com**).

Warnings

Due to technical requirements, components may contain dangerous substances. For information on the types in question, please contact the nearest Infineon Technologies Office.

Infineon Technologies components may be used in life-support devices or systems only with the express written approval of Infineon Technologies, if a failure of such components can reasonably be expected to cause the failure of that life-support device or system or to affect the safety or effectiveness of that device or system. Life support devices or systems are intended to be implanted in the human body or to support and/or maintain and sustain and/or protect human life. If they fail, it is reasonable to assume that the health of the user or other persons may be endangered.