chanhvinh.com

OPTIREG™ linear TLE4253

High precision voltage tracker

AEC Qualified

RoHS

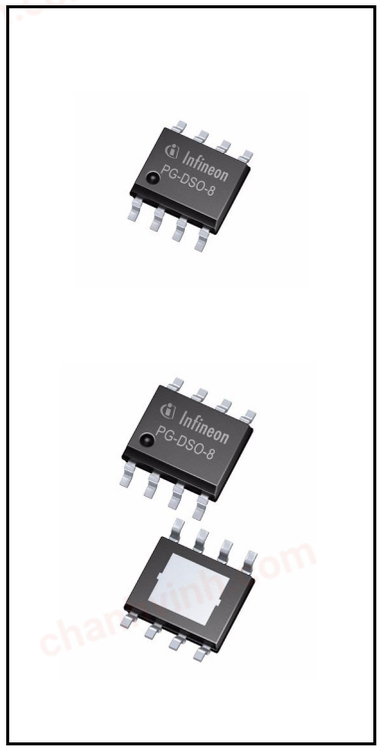

Features

- Tight output tracking tolerance to reference
- Output voltage adjust down to 2.0 V
- Stable with ceramic output capacitor
- Flexibility of output voltage adjust higher or lower than reference, proportional to the reference voltage
- 250 mA output current capability
- Low dropout voltage
- Combined tracking / enable input
- Very low current consumption in OFF mode
- PG-DSO-8 packages with lowest thermal resistance
- Wide input voltage range -42 V ≤ V_I ≤ 45 V
- Wide temperature range: -40°C ≤ T_j ≤ 150°C
- Output protected against short circuit to GND and battery
- Overtemperature protection
- Reverse polarity proof
- Suitable for use in automotive electronics
- Green product (RoHS compliant)

Potential applications

- General automotive applications.

Product validation

Qualified for automotive applications. Product validation according to AEC-Q100.

Description

The OPTIREG™ linear TLE4253 is a monolithic integrated low-dropout voltage tracking regulator in small PG-DSO-8 packages. The exposed pad (EP) package variant PG-DSO-8 exposed pad offers extremely low thermal resistance. The IC is designed to supply off-board systems, e. g. sensors in engine management systems under the severe conditions of automotive applications. Therefore, the IC is equipped with additional protection functions against reverse polarity and short circuit to GND and battery.

chanhvinh.com

With supply voltages up to 40 V, the output voltage follows a reference voltage applied at the adjust input with high accuracy. The reference voltage applied directly to the adjust input or by an e. g. external resistor divider can be 2.0 V at minimum.

The output is able to drive loads up to 250 mA at minimum while the device follows the e. g. 5 V output of a main voltage regulator acting as reference with high accuracy.

The TLE4253 tracker can be set into shutdown mode in order to reduce the quiescent current to an extremely low value. This makes the IC suitable to low power battery applications.

Type	Package	Marking
TLE4253GS	PG-DSO-8	4253
TLE4253E	PG-DSO-8 exposed pad	4253E

chanhvinh.com

Table of contents

Features ... **1**
Potential applications ... **1**
Product validation ... **1**
Description ... **1**
Table of contents ... **3**
1 Block diagram ... **4**
2 Pin configuration ... **5**
2.1 Pin assignment ... 5
2.2 Pin definitions and functions ... 5
3 General product characteristics ... **6**
3.1 Absolute maximum ratings ... 6
3.2 Functional range ... 7
3.3 Thermal resistance ... 8
4 Electrical characteristics ... **9**
4.1 Tracking regulator ... 9
4.2 Current consumption ... 15
4.3 Adjust / enable input ... 17
5 Application information ... **18**
6 Package outlines ... **21**
7 Revision history ... **23**

chanhvinh.com

1 Block diagram

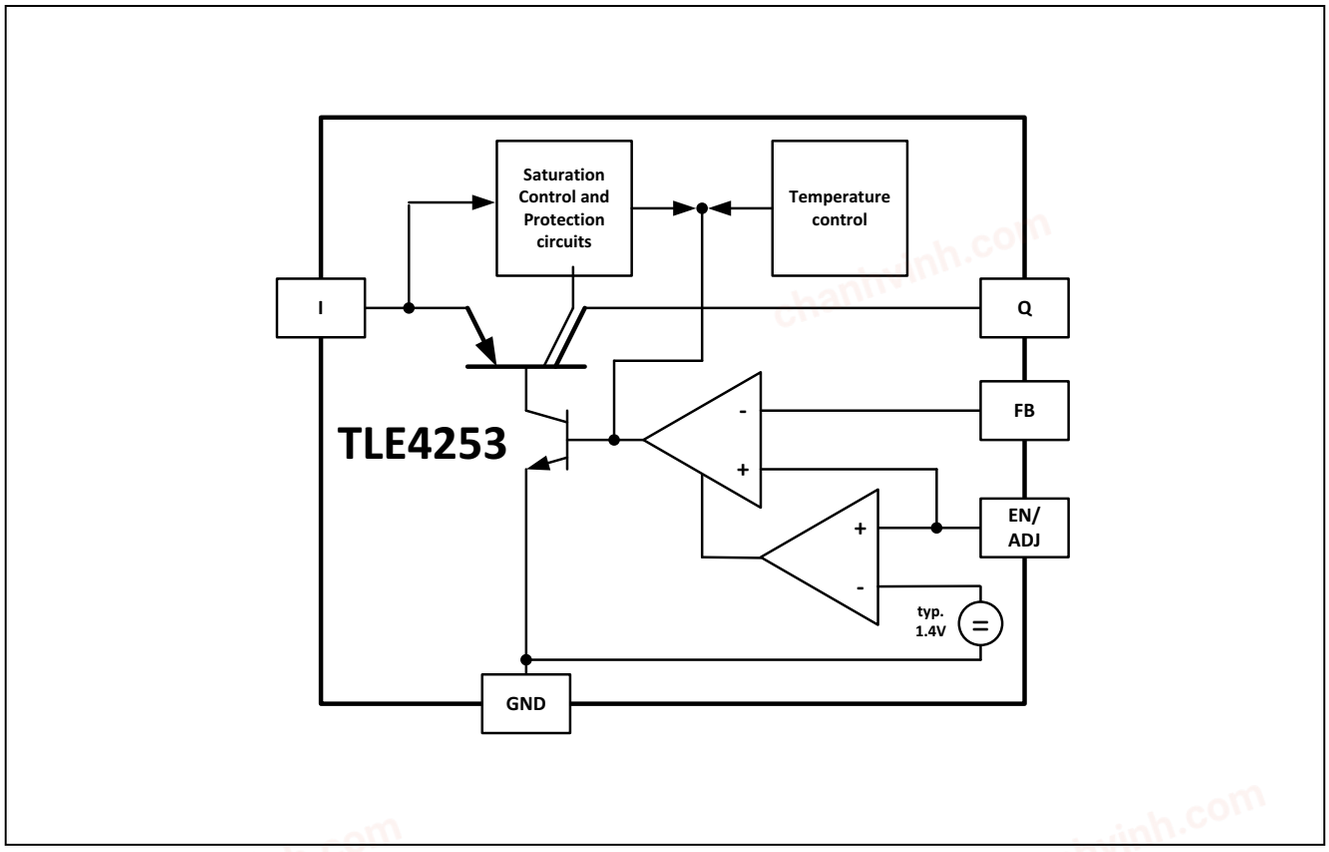

Figure 1 Block diagram

chanhvinh.com

2 Pin configuration

2.1 Pin assignment

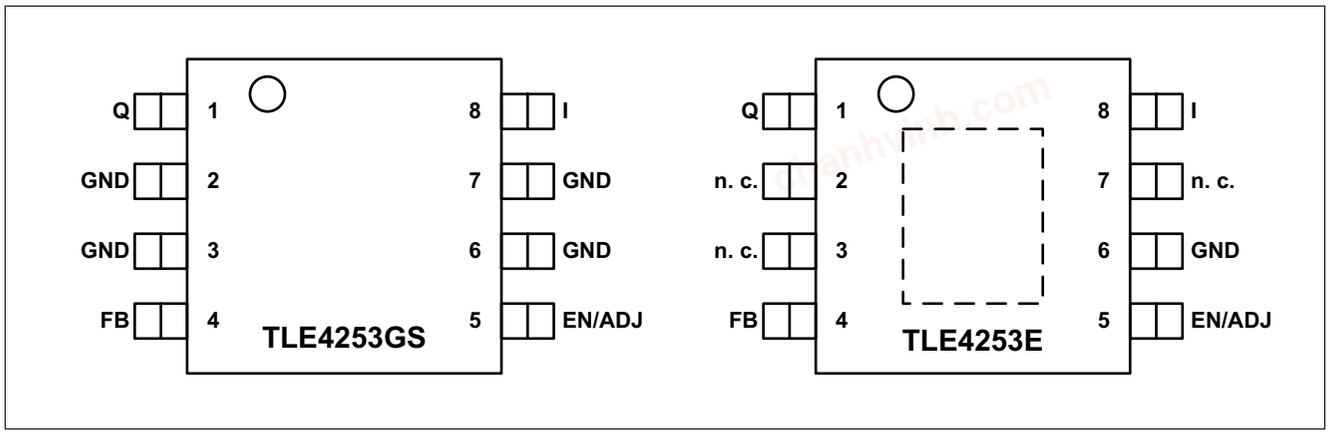

Figure 2 Pin configuration and block diagram

2.2 Pin definitions and functions

Pin	Symbol	Function
1	Q	**Tracker output.** Block to GND with a capacitor close to the IC terminals, respecting capacitance and ESR requirements given in the table “Functional Range”.
2, 3, 6, 7	GND	**Ground reference** (version TLE4253GS only)**.** Interconnect the pins on PCB. Connect to heatsink area.
6	GND	**Ground** (version TLE4253E only)**.** Connect to exposed pad.
2, 3, 7	n. c.	**Not connected** (version TLE4253E only)**.** Connect to GND externally.
4	FB	**Feedback input for tracker.** Inverting input of the internal error amplifier to control the output voltage. Connect this pin directly to the output pin in order to obtain lower or equal output voltages with respect to the reference voltage and connect a voltage divider for higher output voltages than the reference (see application information).
5	EN/ADJ	**Adjust / enable.** Connect the reference to this pin. The active high signal of the reference turns on the device, with active low the tracker is disabled. The reference voltage can be connected directly or by a voltage divider for lower output voltages (see application information).
8	I	**Input.** IC supply. For compensating line influences, a capacitor close to the IC terminals is recommended.
–	EP	**Exposed pad** (version TLE4253E only)**.** Attach the exposed pad on package bottom to the heatsink area on circuit board. Connect to GND.

chanhvinh.com

3 General product characteristics

3.1 Absolute maximum ratings

Table 1 Absolute maximum ratings [1)]

T_j = -40°C to 150°C; all voltages with respect to ground (unless otherwise specified).

Parameter	Symbol	Values			Unit	Note or Test Condition	Number
		Min.	Typ.	Max.			
Voltages							
Input voltage	V_I	-42	–	45	V	–	P_4.1.1
Output voltage	V_Q	-2	–	45	V	–	P_4.1.2
Adjust / enable input	$V_{ADJ/EN}$	-42	–	45	V	–	P_4.1.3
Feedback input	V_{FB}	-42	–	45	V	–	P_4.1.4
Temperature							
Junction temperature	T_j	-40	–	150	°C	–	P_4.1.5
Storage temperature	T_{stg}	-50	–	150	°C	–	P_4.1.6
ESD rating							
ESD susceptibility	$V_{ESD,HBM}$	-4	–	4	kV	HBM[2)]	P_4.1.7
	$V_{ESD,CDM}$	-1	–	1	kV	CDM[3)]	P_4.1.8

1) Not subject to production test, specified by design.
2) ESD susceptibility Human Body Model “HBM” according to EIA/JESD 22-A 114B.
3) ESD susceptibility Charged Device Model “CDM” according to EIA/JESD22-C101 or ESDA STM5.3.1.

Notes

1. *Stresses above the ones listed here may cause permanent damage to the device. Exposure to absolute maximum rating conditions for extended periods may affect device reliability.*
2. *Integrated protection functions are designed to prevent IC destruction under fault conditions described in the data sheet. Fault conditions are considered as “outside” normal operating range. Protection functions are not designed for continuous repetitive operation.*

chanhvinh.com

3.2 Functional range

Table 2 Functional range

Parameter	Symbol	Values			Unit	Note or Test Condition	Number
		Min.	Typ.	Max.			
Input voltage	V_I	3.5	–	40	V	$V_I \geq V_Q + V_{dr}$	P_4.2.1
Adjust / enable input voltage (voltage tracking range)	$V_{ADJ/EN}$	2.0	–	–	V	–	P_4.2.5
Junction temperature	T_j	-40	–	150	°C	–	P_4.2.2
Output capacitor requirements	C_Q	10	–	–	µF	1)	P_4.2.3
	ESR_{CQ}	–	–	5	Ω	2)	P_4.2.4

1) The minimum output capacitance requirement is applicable for a worst case capacitance tolerance of 30%.
2) Relevant ESR value at f = 10 kHz.

Note: Within the functional range the IC operates as described in the circuit description. The electrical characteristics are specified within the conditions given in the related electrical characteristics table.

chanhvinh.com

3.3 Thermal resistance

Table 3 Thermal resistance

Parameter	Symbol	Values			Unit	Note or Test Condition	Number
		Min.	Typ.	Max.			
PG-DSO-8							
Junction to soldering point	R_{thJSP}	–	39	–	K/W	Pins 2 - 3 and 6 - 7 fixed to T_A	P_4.3.1
Junction to ambient	R_{thJA}	–	150	–	K/W	Footprint only [1]	P_4.3.2
	–	–	91	–	K/W	300 mm² PCB heatsink area [1]	P_4.3.3
	–	–	81	–	K/W	600 mm² PCB heatsink area [1]	P_4.3.4
	–	–	65	–	K/W	2s2p board[2]	P_4.3.5
PG-DSO-8 exposed pad							
Junction to case bottom	R_{thJC}	–	9	–	K/W	Measured to exposed bottom pad	P_4.3.6
Junction to ambient	R_{thJA}	–	169	–	K/W	Footprint only [1]	P_4.3.7
	–	–	64	–	K/W	300 mm² PCB heatsink area [1]	P_4.3.8
	–	–	55	–	K/W	600 mm² PCB heatsink area [1]	P_4.3.9
	–	–	49	–	K/W	2s2p board[2]	P_4.3.10

1) Package mounted on PCB FR4; 80 × 80 × 1.5 mm³; 35 µm Cu, 5 µm Sn; horizontal position; zero airflow. Not subject to production test; specified by design.

2) Specified R_{thJA} value is according to JESD51-2,-5,-7 at natural convection on FR4 2s2p board. The product (chip+package) was simulated on a 76.2 × 114.3 × 1.5 mm³ board with 2 inner copper layers (2 × 70 µm Cu, 2 × 35 µm Cu).
Where applicable a thermal via array under the package contacted the first inner copper layer.

chanhvinh.com

4 Electrical characteristics

4.1 Tracking regulator

The output voltage V_Q is controlled by comparing it to the voltage applied at pin ADJ/EN and driving a PNP pass transistor accordingly. The control loop stability depends on the output capacitor C_Q, the load current, the chip temperature and the poles/zeros introduced by the integrated circuit. To ensure stable operation, the output capacitor's capacitance and its equivalent series resistor ESR requirements given in the table "Functional Range" have to be maintained. For details see also the typical performance graph "Output Capacitor Series Resistor ESR_{CQ} vs. Output Current I_Q". Also, the output capacitor shall be sized to buffer load transients.

An input capacitor C_I is strongly recommended to buffer line influences. Connect the capacitors close to the IC terminals.

Protection circuitry prevent the IC as well as the application from destruction in case of catastrophic events. These safeguards contain output current limitation, reverse polarity protection as well as thermal shutdown in case of overtemperature.

In order to avoid excessive power dissipation that could never be handled by the pass element and the package, the maximum output current is decreased at high input voltages.

An overtemperature protection circuit prevents the IC from immediate destruction under fault conditions (e. g. output continuously short-circuited to GND) by reducing the output current. A thermal balance below 200°C junction temperature is established. Please note that a junction temperature above 150°C is outside the maximum ratings and reduces the IC lifetime.

The TLE4253 allows a negative supply voltage. However, several small currents are flowing into the IC. For details see electrical characteristics table and typical performance graph. The thermal protection circuit is not operating during reverse polarity condition.

chanhvinh.com

Electrical characteristics

Table 4 Electrical characteristics tracking regulator

V_I = 13.5 V; $V_{ADJ/EN} \geq$ 2.0 V; $V_{FB} = V_Q$; T_j = -40°C to 150°C;
all voltages with respect to ground (unless otherwise specified).

Parameter	Symbol	Values			Unit	Note or Test Condition	Number
		Min.	Typ.	Max.			
Output voltage tracking accuracy $\Delta V_Q = V_{EN/ADJ} - V_Q$	ΔV_Q	-5	–	5	mV	I_Q = 30 mA; $V_{ADJ/EN}$ = 5 V	P_5.1.1
	–	-10	–	10	mV	0.1 mA ≤ I_Q ≤ 200 mA; 3.5 V ≤ V_I ≤ 32 V $V_{ADJ/EN}$ = 2 V	P_5.1.2
	–	-15	–	15	mV	0.1 mA ≤ I_Q ≤ 250 mA; 9 V ≤ V_I ≤ 32 V $V_{ADJ/EN}$ = 5 V	P_5.1.3
Load regulation steady-state	$\lvert\Delta V_{Q,load}\rvert$	–	–	10	mV	0.1 mA ≤ I_Q ≤ 200 mA; $V_{ADJ/EN}$ = 5 V	P_5.1.4
Line regulation steady-state	$\lvert\Delta V_{Q,line}\rvert$	–	–	10	mV	V_I = 6 V to 32 V; I_Q = 10 mA $V_{ADJ/EN}$ = 5 V	P_5.1.5
Power supply ripple rejection	*PSRR*	60	–	–	dB	f_{ripple} = 100 Hz; V_{ripple} = 1 Vpp C_Q = 10 µF, ceramic type [1]	P_5.1.6
Dropout voltage $V_{dr} = V_I - V_Q$	V_{dr}	–	280	600	mV	I_Q = 200 mA [2]	P_5.1.7
Output current limitation	$I_{Q,max}$	251	400	600	mA	$V_Q = (V_{ADJ} - 0.1\ V)$; $V_{ADJ/EN}$ = 5 V	P_5.1.8
Reverse current	I_Q	-10	-5.5	–	mA	V_I = 0 V; V_Q = 16 V; $V_{ADJ/EN}$ = 5 V	P_5.1.9
Reverse current at negative input voltage	I_I	-5	-2	–	mA	V_I = -16 V; V_Q = 0 V; $V_{ADJ/EN}$ = 5 V	P_5.1.10
Feedback input FB							
Feedback input biasing current	I_{FB}	–	0.1	0.5	µA	V_{FB} = 5 V	P_5.1.11
Overtemperature protection							
Junction temperature equilibrium	$T_{j,eq}$	151	–	200	°C	T_j increasing due to power dissipation generated by the IC[1]	P_5.1.12

1) Parameter not subject to production test; specified by design.

2) Measured when the output voltage V_Q has dropped 100 mV from its nominal value.

chanhvinh.com

Electrical characteristics

Typical performance characteristics tracking regulator

$V_{ADJ/EN}$ = 5 V; V_{FB} = V_Q (unless otherwise noted)

Output voltage V_Q vs. adjust voltage V_{ADJ}

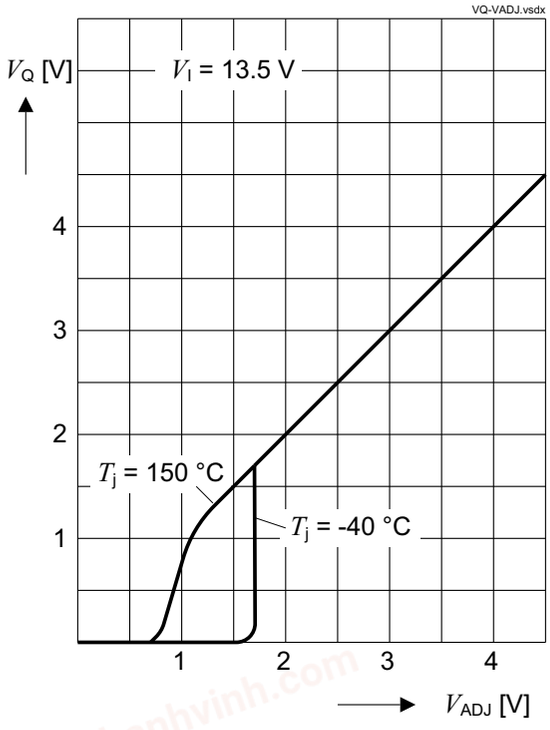

Output voltage V_Q vs. input voltage V_I

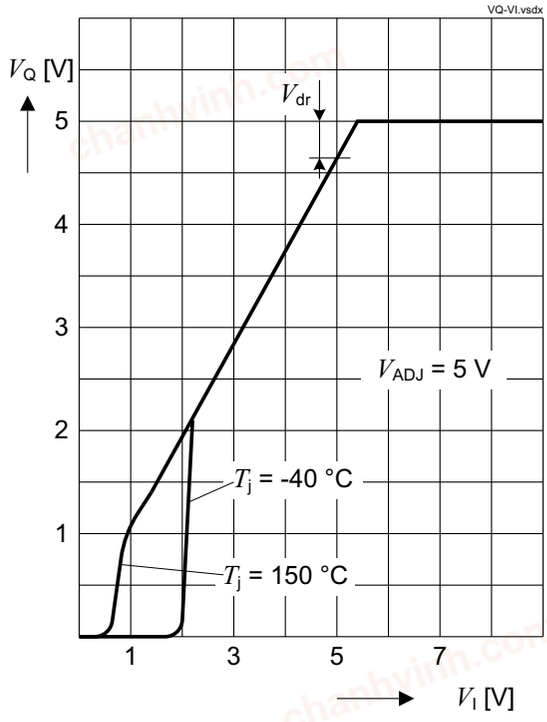

Output current limitation $I_{Q,max}$ vs. input voltage V_I

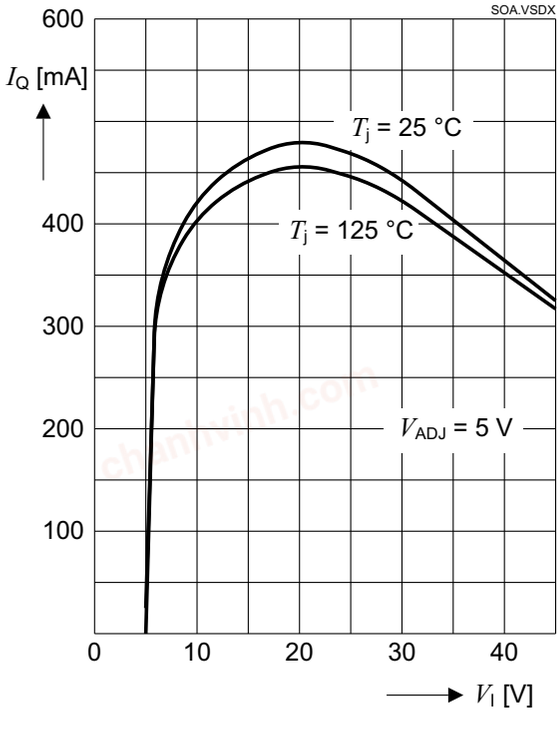

Output current limitation $I_{Q,max}$ vs. output voltage V_Q

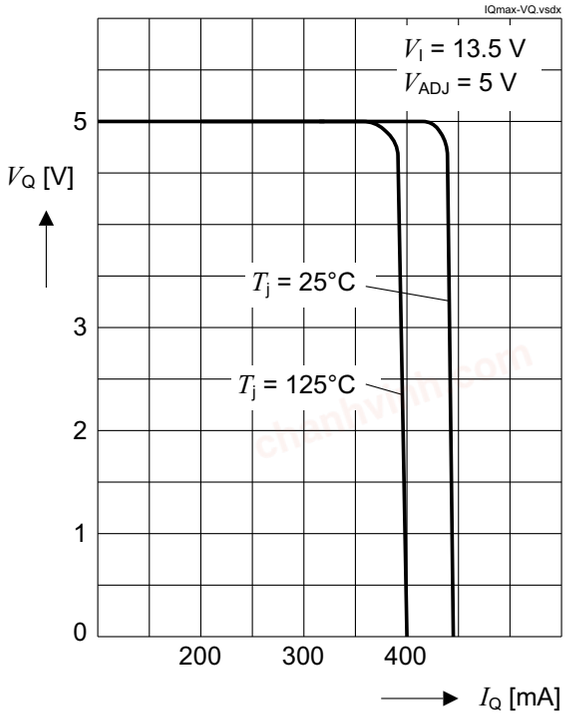

chanhvinh.com

Electrical characteristics

Typical performance characteristics tracking regulator

$V_{ADJ/EN}$ = 5 V; V_{FB} = V_Q (unless otherwise noted)

Output capacitor series resistor ESR_{CQ} vs. output current I_Q

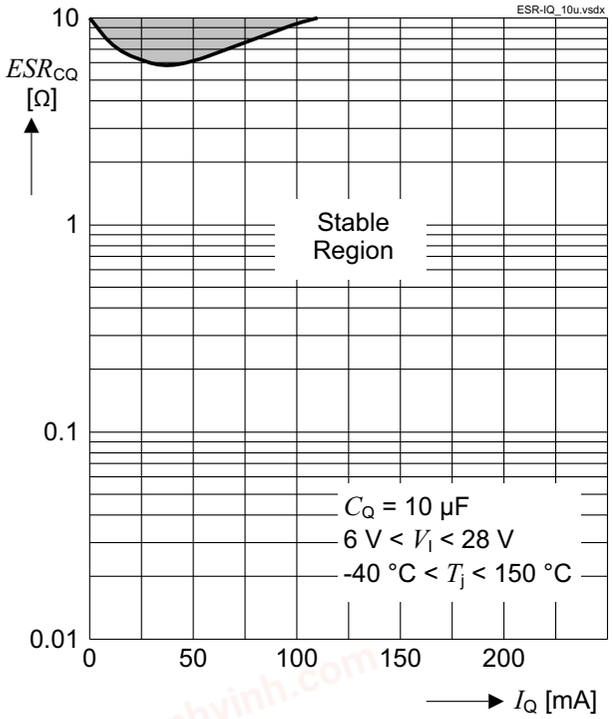

Output capacitor series resistor ESR_{CQ} vs. output current I_Q

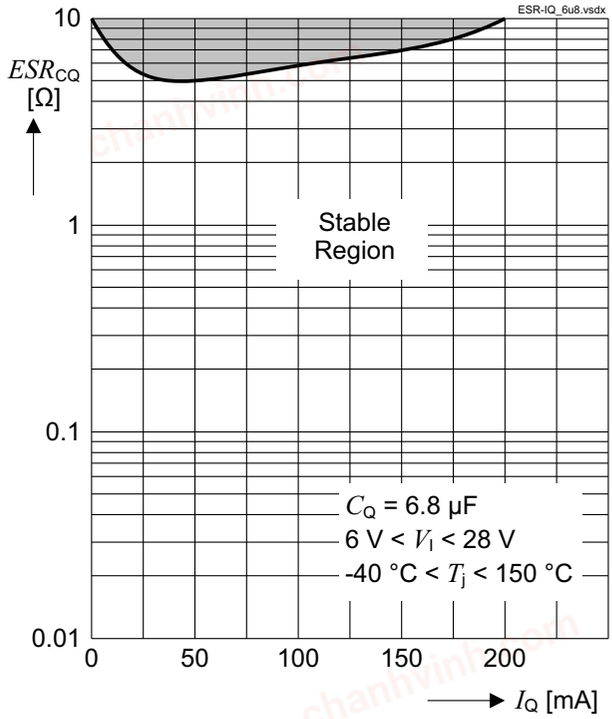

Power supply ripple rejection *PSRR*

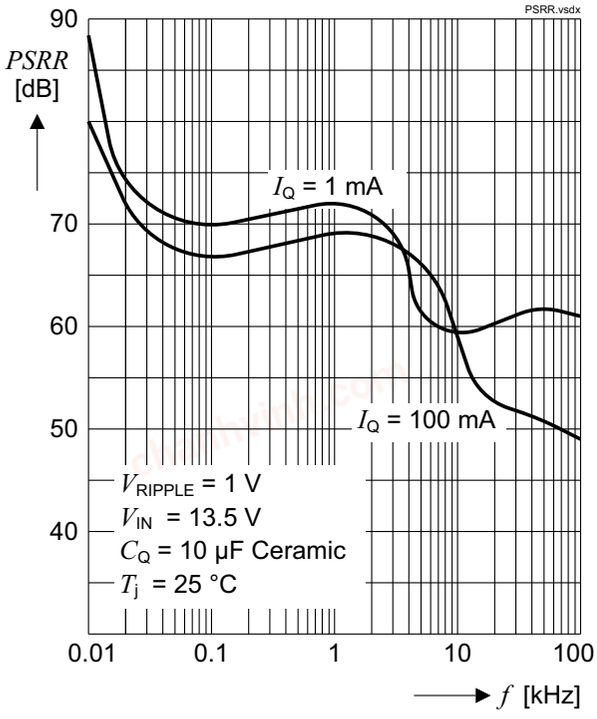

Line regulation $dV_{Q,line}$ vs. input voltage change dV_I

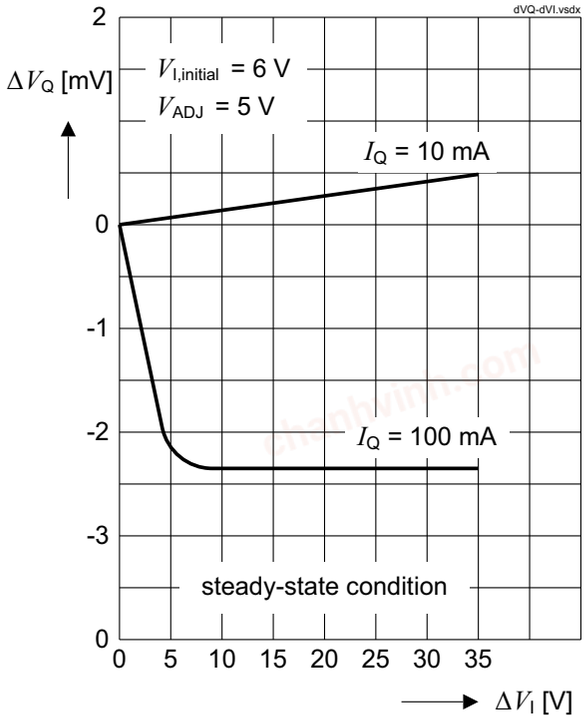

chanhvinh.com

Electrical characteristics

Typical performance characteristics tracking regulator

$V_{ADJ/EN}$ = 5 V; V_{FB} = V_Q (unless otherwise noted)

Load regulation d$V_{Q,line}$ vs. output current change dI_Q

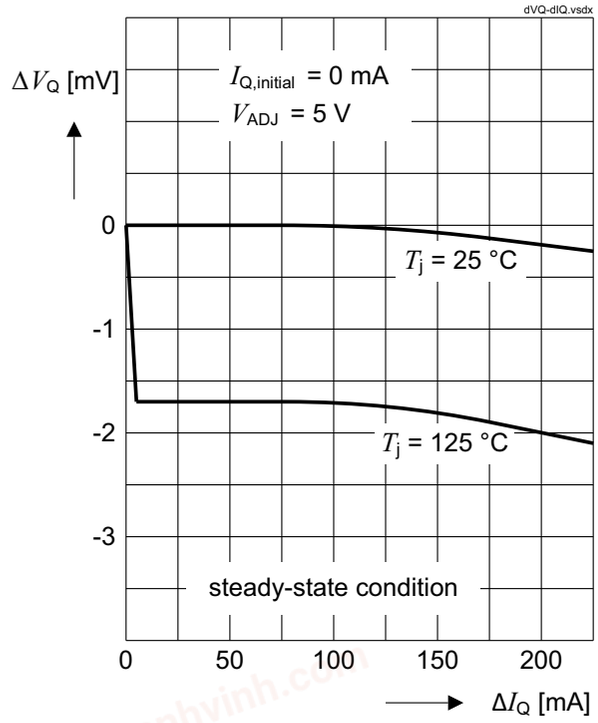

Tracking accuracy ΔV_Q vs. junction temperature T_j

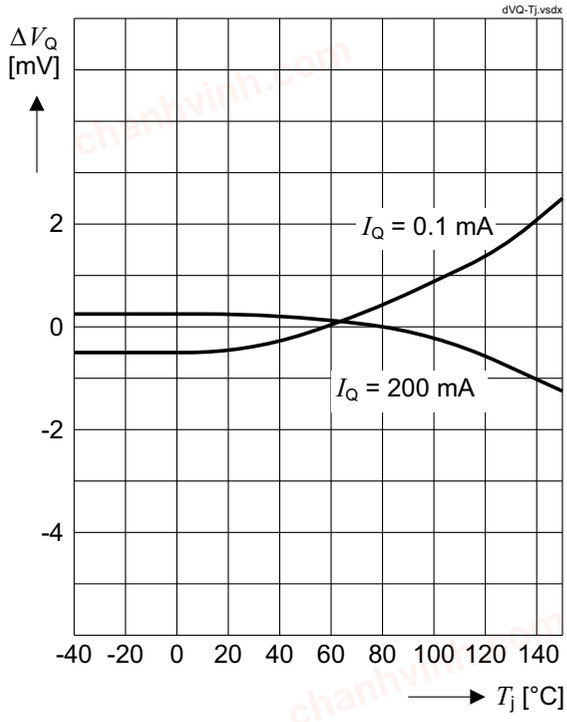

Line transient response

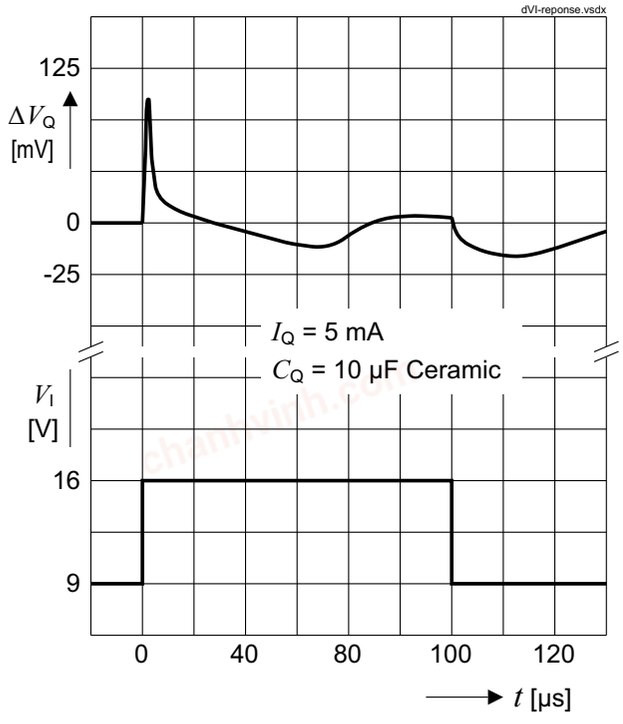

Load transient response

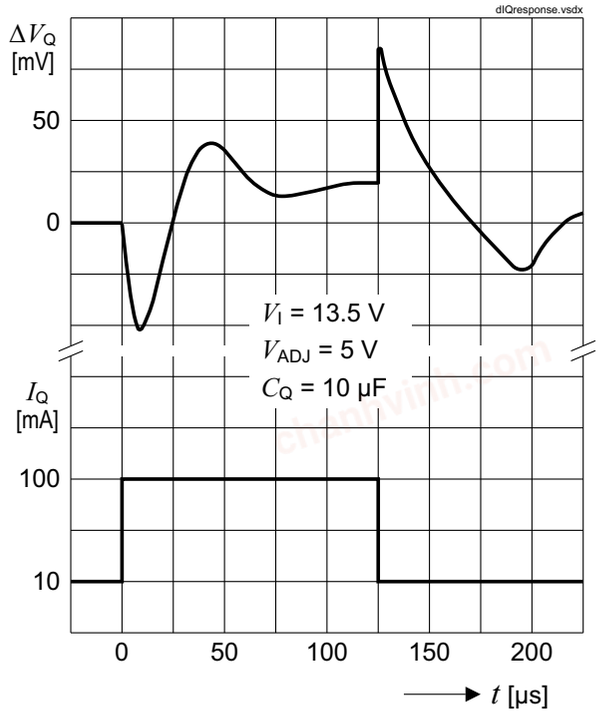

chanhvinh.com

Electrical characteristics

Typical performance characteristics tracking regulator

$V_{ADJ/EN}$ = 5 V; V_{FB} = V_Q (unless otherwise noted)

Dropout voltage V_{dr} vs. output current I_Q

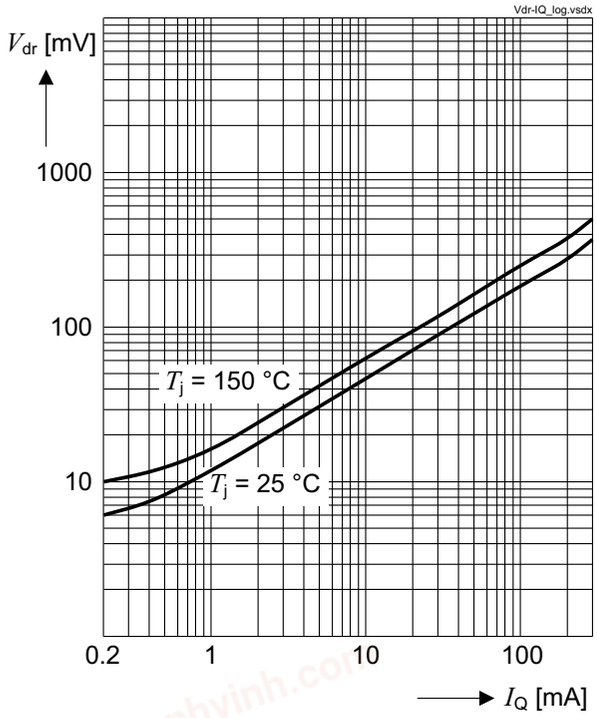

Dropout voltage V_{dr} vs. junction temperature T_j

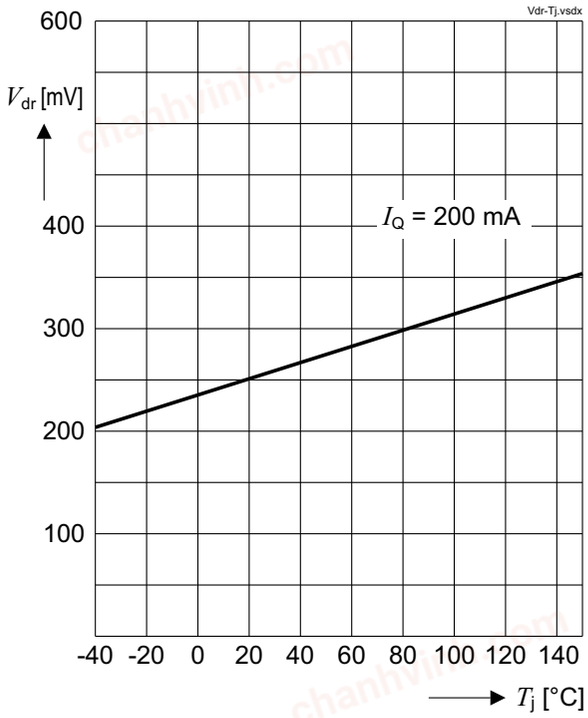

Reverse current I_I vs. input voltage V_I

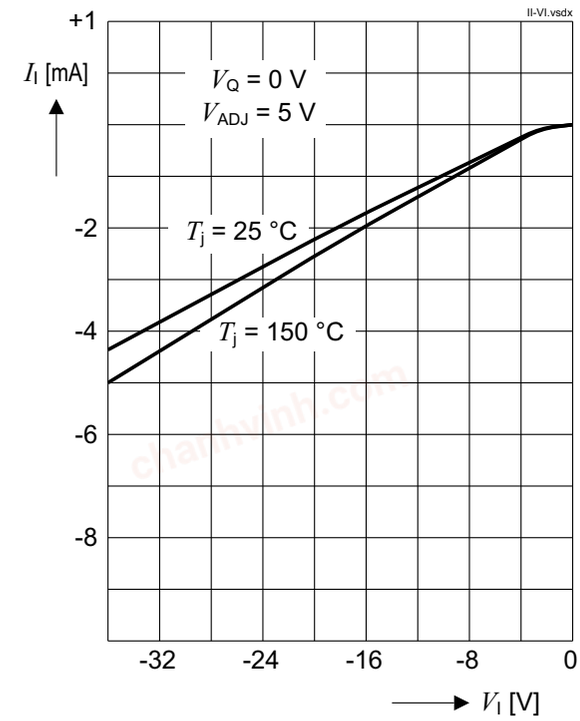

Reverse output current I_Q vs. output voltage V_Q

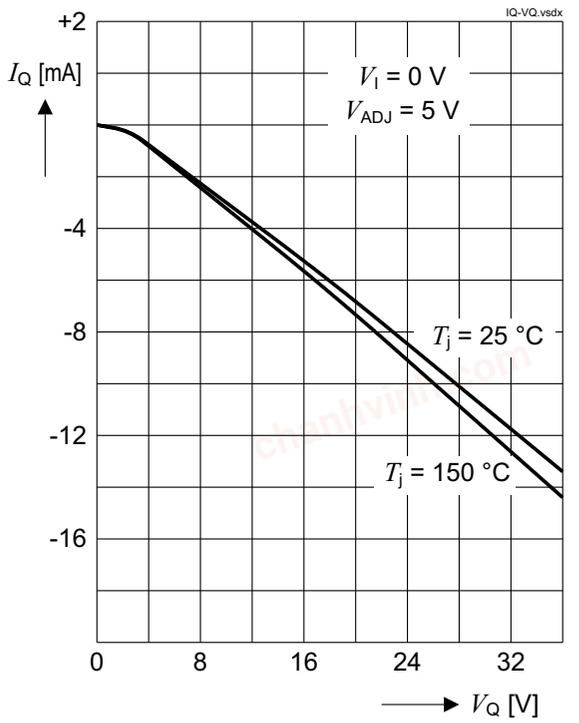

chanhvinh.com

4.2 Current consumption

Table 5 Electrical characteristics current consumption

V_I = 13.5 V; $V_{ADJ/EN}$ ≥ 2.0 V; V_{FB} = V_Q; T_j = -40°C to 150°C;
all voltages with respect to ground (unless otherwise specified).

Parameter	Symbol	Values			Unit	Note or Test Condition	Number
		Min.	Typ.	Max.			
Quiescent current stand-by mode	I_{q1}	–	0	2	µA	V_Q = 0 V; $V_{ADJ/EN}$ ≤ 0.4 V; T_j ≤ 85°C	P_5.2.1
Current consumption $I_q = I_I - I_Q$	I_{q2}	–	120	150	µA	I_Q ≤ 100 µA; $V_{ADJ/EN}$ = 5 V; T_j ≤ 85°C	P_5.2.2
	–	–	7	15	mA	I_Q ≤ 200 mA; $V_{ADJ/EN}$ = 5 V	P_5.2.3
Current consumption dropout region; $I_q = I_I - I_Q$	I_{q3}	–	1	3	mA	V_{ADJ} = V_I = 5 V; I_Q = 0 mA	P_5.2.4

chanhvinh.com

Electrical characteristics

Typical performance characteristics tracking regulator

$V_{ADJ/EN}$ = 5 V; V_{FB} = V_Q (unless otherwise noted)

Current consumption I_{q2} vs. junction temperature T_j

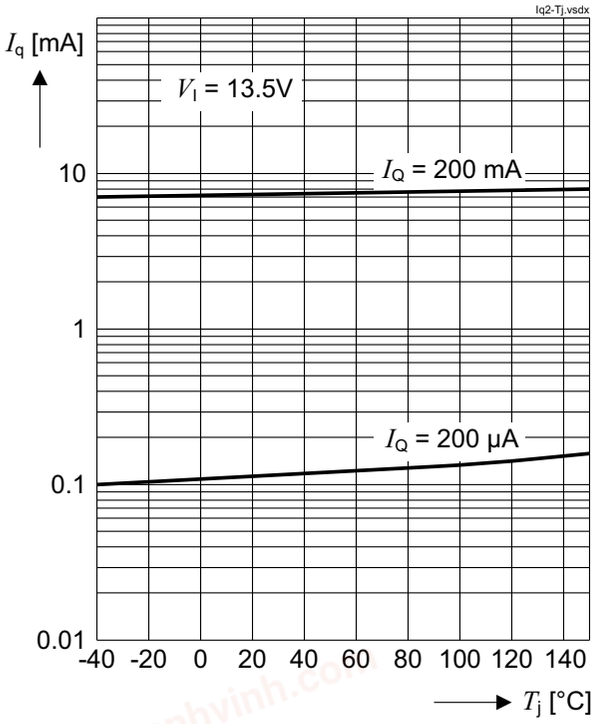

Current consumption I_q vs. output current I_Q

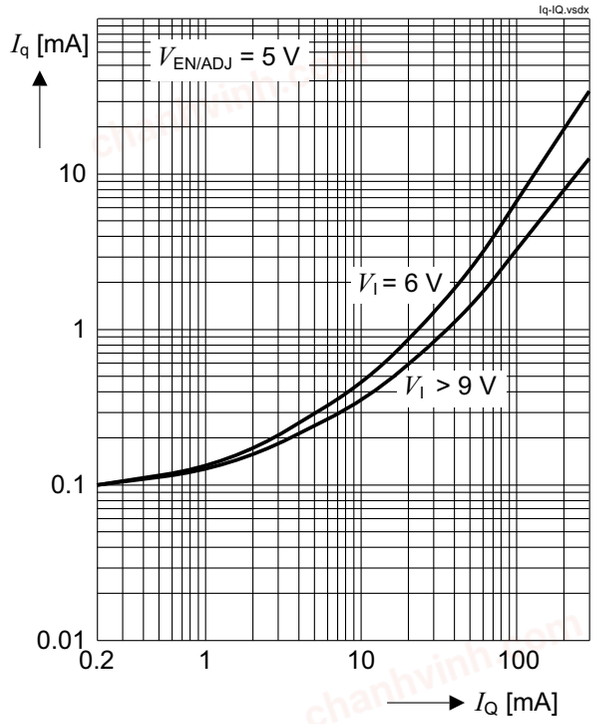

Current consumption I_q vs. input voltageV_I

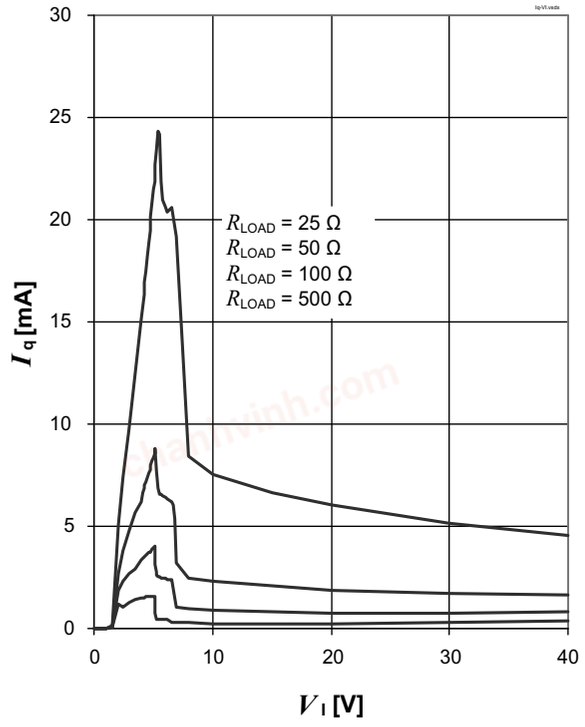

Quiescent current I_{q1} vs. junction temperature T_j

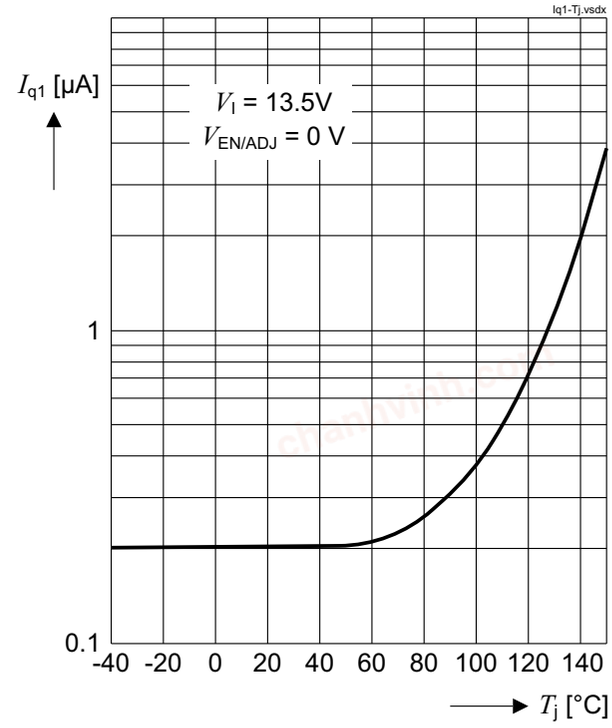

chanhvinh.com

4.3 Adjust / enable input

In order to reduce the quiescent current to a minimum, the TLE4253 can be switched to stand-by mode by setting the adjust/enable input “ADJ/EN” to “low”.
In case the pin “ADJ/EN” is left open, an internal pull-down resistor keeps the voltage at the pin low and therefore ensures that the regulator is switched off.

Table 6 Electrical characteristics adjust / enable

V_I = 13.5 V; $V_{ADJ/EN} \geq$ 2.0 V; $V_{FB} = V_Q$; T_j = -40°C to 150°C;
all voltages with respect to ground (unless otherwise specified).

Parameter	Symbol	Values			Unit	Note or Test Condition	Number
		Min.	Typ.	Max.			
Adjust / enable low signal valid	$V_{ADJ/EN,low}$	–	–	0.4	V	V_Q = 0 V; I_I < 2 µA; $T_j \leq$ 85°C	P_5.3.1
Adjust / enable high signal valid (tracking region)	$V_{ADJ/EN,high}$	2	–	–	V	V_Q settled: $\lvert V_Q - V_{ADJ/EN}\rvert$ < 10 mV; I_Q = 10 mA	P_5.3.2
Adjust / enable input current	$I_{ADJ/EN}$	–	3.8	5.5	µA	$V_{ADJ/EN}$ = 5 V;	P_5.3.3
Adjust / enable internal pull-down resistor	$R_{ADJ/EN}$	1	1.5	2	MΩ	–	P_5.3.4

Typical performance characteristics tracking regulator

$V_{ADJ/EN}$ = 5 V; $V_{FB} = V_Q$ (unless otherwise noted)

Startup sequence

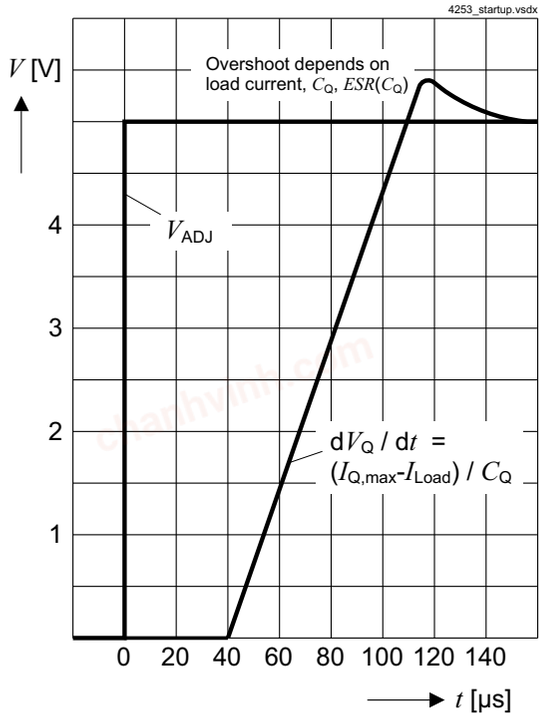

chanhvinh.com

5 Application information

Note: The following information is given as a hint for the implementation of the device only and shall not be regarded as a description or warranty of a certain functionality, condition or quality of the device. The application circuits shown are simplified examples. The function must be verified in the real application.

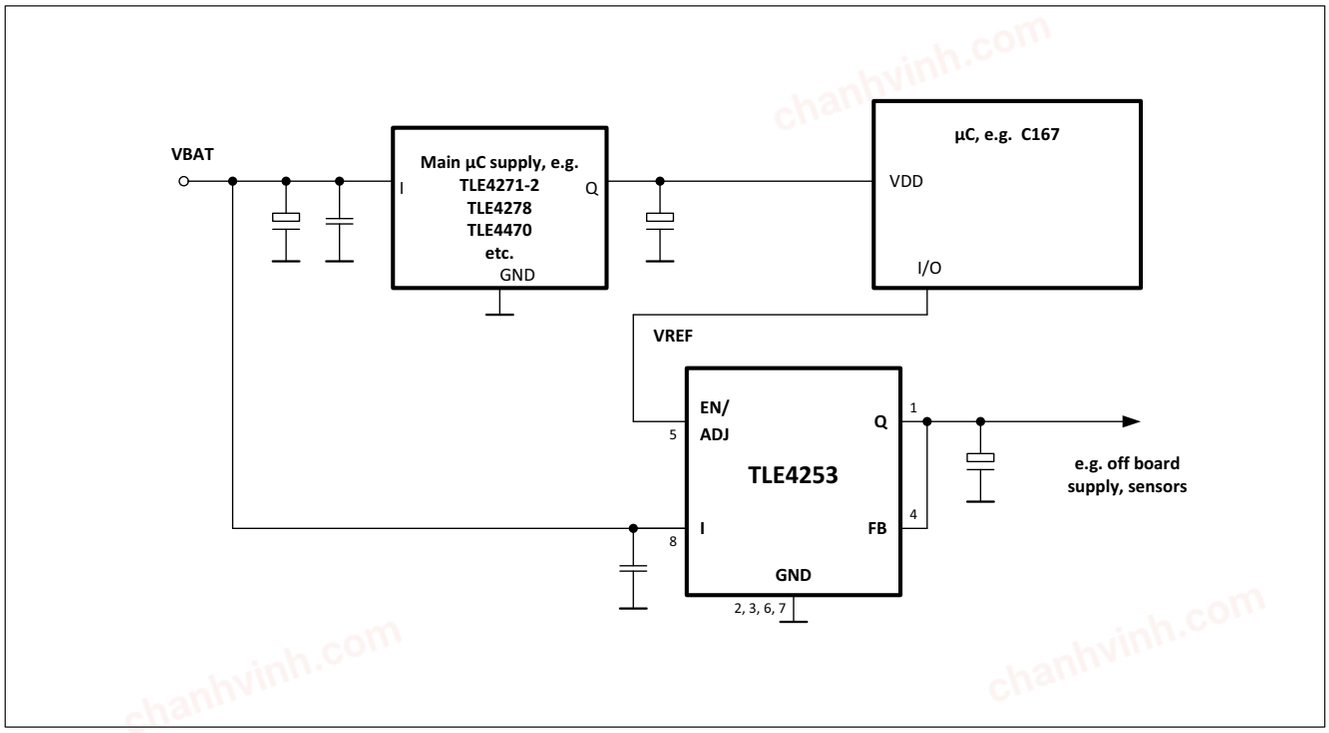

Figure 3 Application circuit: Output voltage V_Q equal to reference voltage V_{REF}

Figure 3 shows the typical schematic for applications where the tracker output voltage equals the reference voltage V_{REF} applied to the pin “EN/ADJ”. The pin “FB” is connected directly to the output. The reference voltage is directly applied “EN/ADJ”.

chanhvinh.com

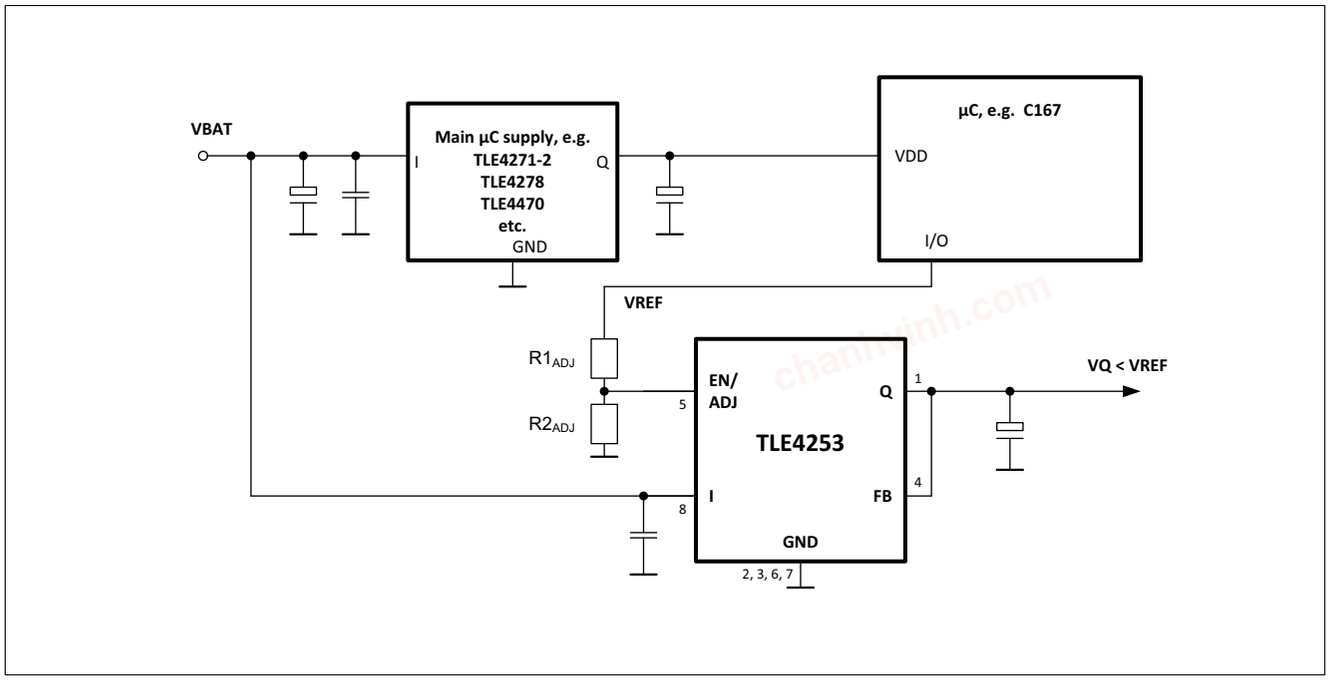

Figure 4 Application circuit: Output voltage V_Q lower than reference voltage V_{REF}

In order to obtain a lower output voltage V_Q at the tracker output than the reference voltage V_{REF}, a voltage divider according to **Figure 4** has to be used. The output voltage V_Q then calculates:

(5.1)

$$V_Q = V_{REF} \cdot \left(\frac{R2_{ADJ}}{R1_{ADJ} + R2_{ADJ}} \right)$$

With a given reference voltage V_{REF}, the desired output voltage V_Q and the resistor value $R1_{ADJ}$, the resistor value for $R2_{ADJ}$ is given by:

(5.2)

$$R2_{ADJ} = R1_{ADJ} \cdot \left(\frac{V_Q}{V_{REF} - V_Q} \right)$$

Taking into consideration also the effect of the internal EN/ADJ pull-down resistor, the external resistor divider's $R2_{ADJ}$ has to be selected to:

(5.3)

$$R2_{ADJ,select} = \left(\frac{R2_{ADJ} \cdot R_{PullDown,min}}{R_{PullDown,min} - R2_{ADJ}} \right)$$

chanhvinh.com

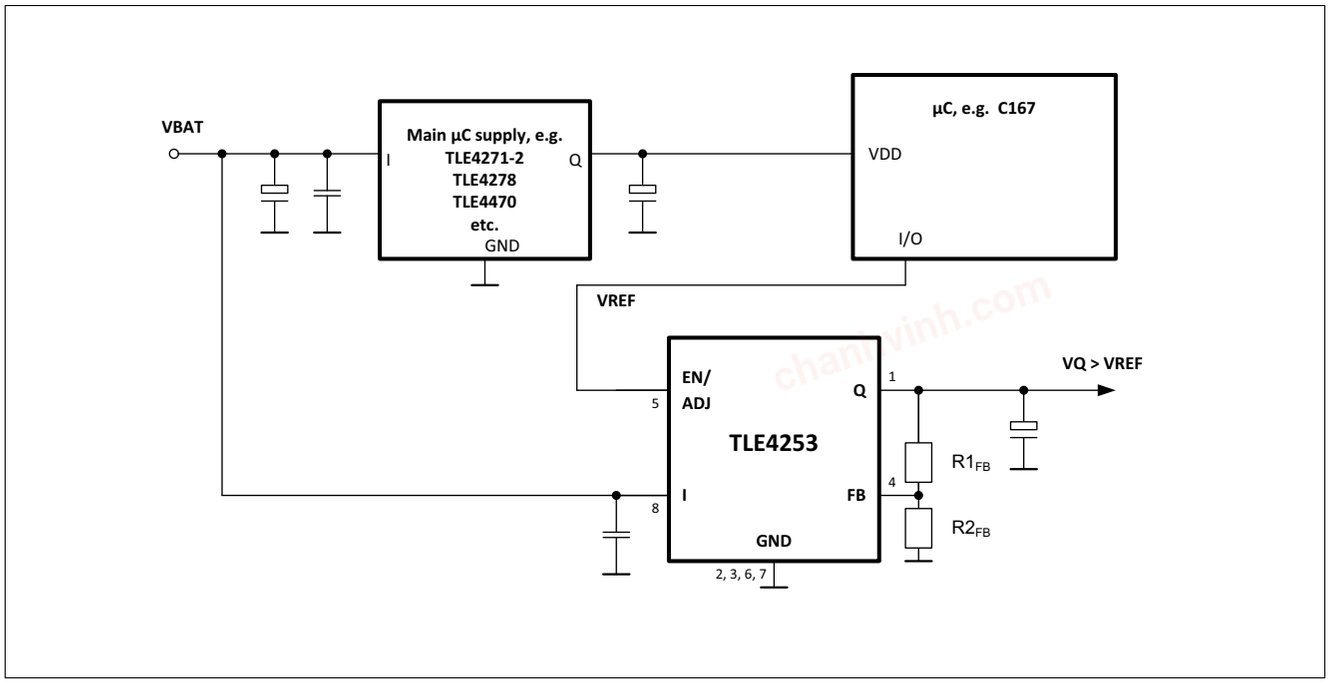

Figure 5 Application circuit: Output voltage V_Q higher than reference voltage V_{REF}

For output voltages higher than the reference voltage, the voltage divider has to be applied between the feedback and the output according to **Figure 5**. The equation for the output voltage with respect to the reference voltage is given by:

(5.4)

$$V_Q = V_{REF} \cdot \left(\frac{R1_{FB} + R2_{FB}}{R2_{FB}}\right)$$

Keep in mind that the input voltage has to be at minimum equal to the output voltage plus the dropout voltage of the regulator.
With a given reference voltage V_{REF}, the desired output voltage V_Q and the resistor value $R1_{FB}$, the resistor value for $R2_{FB}$ is given by:

(5.5)

$$R2_{FB} = R1_{FB} \cdot \left(\frac{V_{REF}}{V_Q - V_{REF}}\right)$$

chanhvinh.com

6 Package outlines

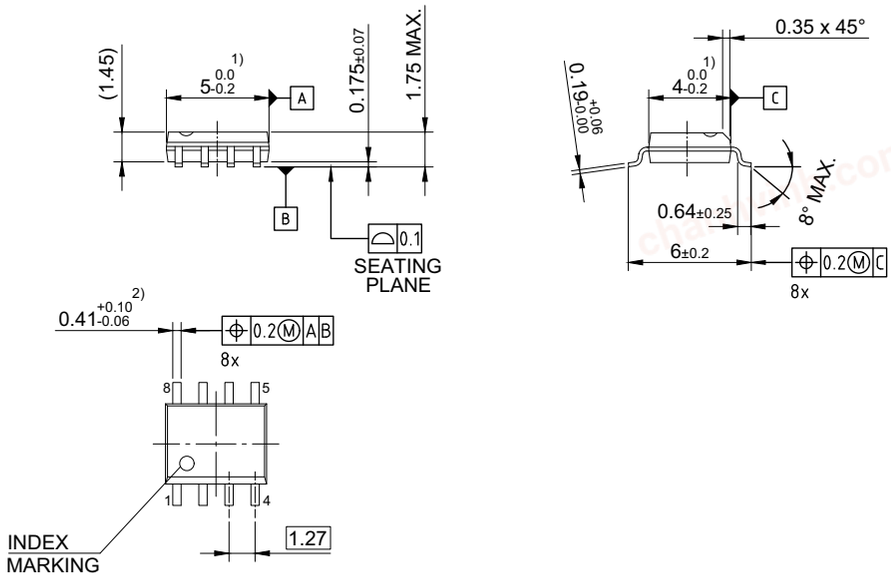

1) Does not include plastic or metal protrusion of 0.15 max. per side
2) Lead width can be 0.61 max. in dambar area
All dimensions are in units mm
The drawing is in compliance with ISO 128-30, Projection Method 1 [ ]

Figure 6 Outline PG-DSO-8[1)]

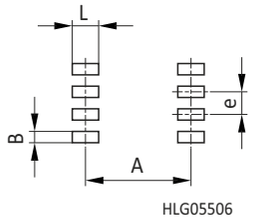

Reflow soldering dimensions:
e = 1.27
A = 5.69
L = 1.31
B = 0.65

Figure 7 Footprint PG-DSO-8[1)]

1) Dimensions in mm.

chanhvinh.com

Package outlines

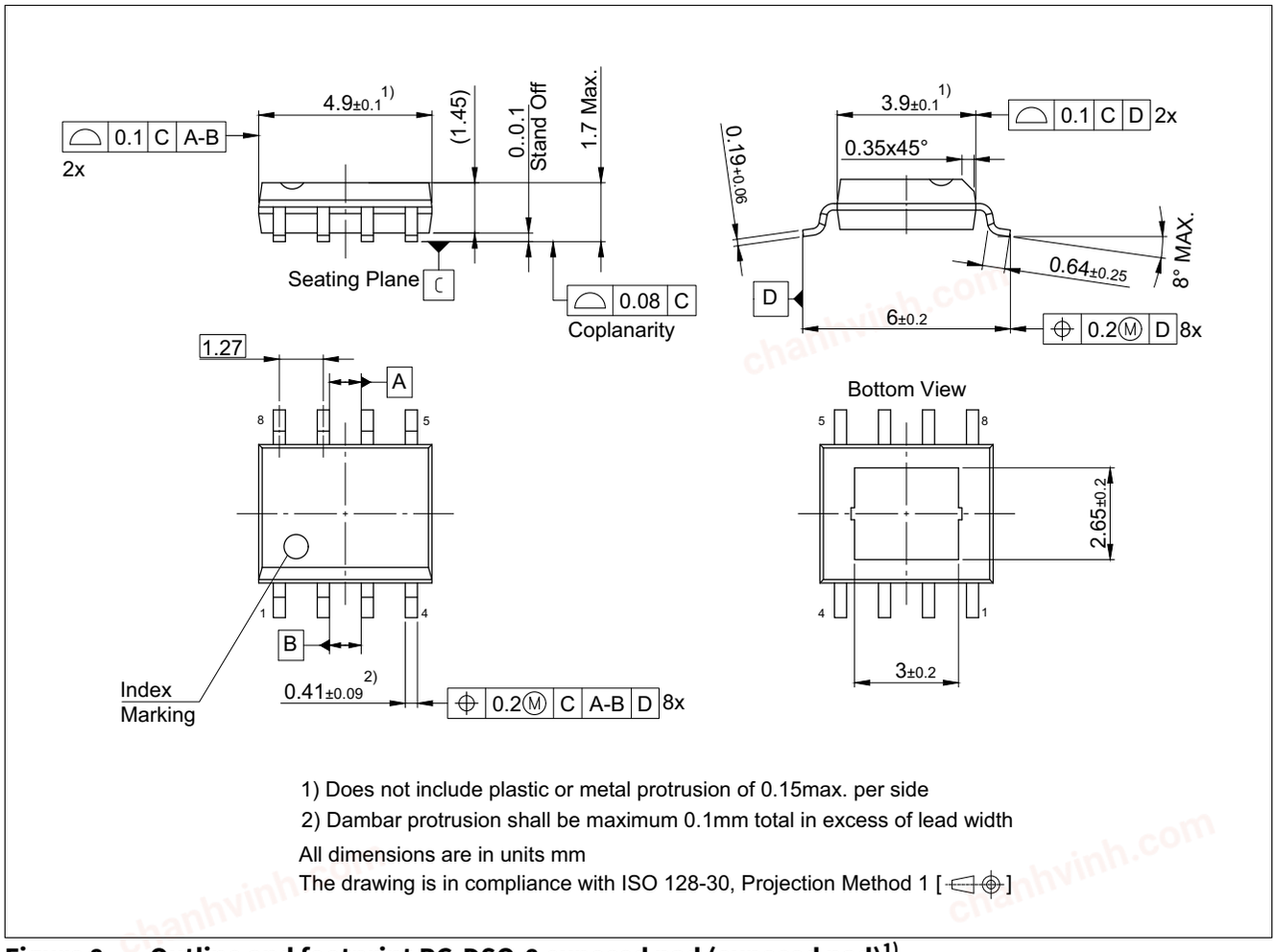

Figure 8 Outline and footprint PG-DSO-8 exposed pad (exposed pad)[1)]

Green product (RoHS compliant)

To meet the world-wide customer requirements for environmentally friendly products and to be compliant with government regulations the device is available as a green product. Green products are RoHS-compliant (i.e Pb-free finish on leads and suitable for Pb-free soldering according to IPC/JEDEC J-STD-020).

Further information on packages

https://www.infineon.com/packages

1) Dimensions in mm.

chanhvinh.com

7 Revision history

Revision	Date	Changes
1.21	2021-04-20	Editorial changes. Correct “Non inverting” to “Inverting” in the description of the **FB** pin in **“Pin definitions and functions” on Page 5**. Assigned the parameter **“Adjust / enable input voltage (voltage tracking range)” on Page 7** the number P_4.2.5. Split the previous figure 6 into **Figure 6 “Outline PG-DSO-8” on Page 21** and **Figure 7 “Footprint PG-DSO-81)” on Page 21**. (The old figure 7 is now **Figure 8 “Outline and footprint PG-DSO-8 exposed pad (exposed pad)” on Page 22**.)
1.2	2009-11-09	Updated Version Data Sheet, version TLE4253E in PG-DSO-8 exposed pad and all related description added: In **“Features” on Page 1** picture for package PG-DSO-8 updated In **“Features” on Page 1** “package” replaced by “packages” In **“Description” on Page 1** “a small PG-DSO-8 package” replaced by “small PG-DSO-8 packages”; “The exposed pad (EP) package variant PG-DSO-8 exposed pad offers extremely low thermal resistance.” added; “suits” replaces by “makes” In **“Pin assignment” on Page 5**, package PG-DSO-8 exposed pad added In **“Pin definitions and functions” on Page 5** all definition for package PG-DSO-8 exposed pad added In **“Thermal resistance” on Page 8** all values for package PG-DSO-8 exposed pad added (P_4.3.6 - P_4.3.10) In **“Adjust / enable input” on Page 17** typo corrected: “resistors” replaced by “resistor” In **“Package outlines” on Page 21** package PG-DSO-8 exposed pad added
1.1	2008-08-19	Updated Version Final Datasheet for TLE4253GS: **“Package outlines” on Page 21** updated; In **“Typical performance characteristics tracking regulator” on Page 16** Graph **“Current consumption Iq vs. input voltageVI” on Page 16** added
1.0	2007-07-10	Initial Final Datasheet for TLE4253GS. For the TLE4253ES (exposed pad) product variant, please refer to the respective datasheet

chanhvinh.com

Trademarks
All referenced product or service names and trademarks are the property of their respective owners.

Edition 2021-04-20
Published by
Infineon Technologies AG
81726 Munich, Germany

© 2021 Infineon Technologies AG.
All Rights Reserved.

Do you have a question about any aspect of this document?
Email: erratum@infineon.com

Document reference
Z8F55248541

IMPORTANT NOTICE

The information given in this document shall in no event be regarded as a guarantee of conditions or characteristics ("Beschaffenheitsgarantie").

With respect to any examples, hints or any typical values stated herein and/or any information regarding the application of the product, Infineon Technologies hereby disclaims any and all warranties and liabilities of any kind, including without limitation warranties of non-infringement of intellectual property rights of any third party.

In addition, any information given in this document is subject to customer's compliance with its obligations stated in this document and any applicable legal requirements, norms and standards concerning customer's products and any use of the product of Infineon Technologies in customer's applications.

The data contained in this document is exclusively intended for technically trained staff. It is the responsibility of customer's technical departments to evaluate the suitability of the product for the intended application and the completeness of the product information given in this document with respect to such application.

For further information on technology, delivery terms and conditions and prices, please contact the nearest Infineon Technologies Office (**www.infineon.com**).

WARNINGS

Due to technical requirements products may contain dangerous substances. For information on the types in question please contact your nearest Infineon Technologies office.

Except as otherwise explicitly approved by Infineon Technologies in a written document signed by authorized representatives of Infineon Technologies, Infineon Technologies' products may not be used in any applications where a failure of the product or any consequences of the use thereof can reasonably be expected to result in personal injury.