chanhvinh.com

TLD2331-3EP

LITIX™ Basic+

AEC Qualified RoHS



Features

- Triple channel device with integrated and protected output stages (current sources), optimized to drive LEDs as additional low cost current source
- High output current (up to 80 mA) per channel
- Very low current consumption in sleep mode
- Very low output leakage when channel is “off”
- Low current consumption during fault
- Additional output current demand supported by LITIX™ Companion direct drive
- Very high precision digital dimming supported
- Intelligent fault management: up to 16 and more devices can share a common error network with only one external resistor
- Reverse polarity protection allows reduction of external components and improves system performance at low battery/input voltages
- Overload protection
- Wide temperature range: -40°C < T_J < 150°C
- Output current control via external low power resistor
- Green product (RoHS compliant)

Potential applications

- Cost effective “stop”/ “tail” function implementation with shared and separated LEDs per function
- Turn indicators
- Position, fog, rear lights and side markers
- Animated light functions like wiping indicators and “welcome/goodbye” functions
- Day Running Light
- Interior lighting functions like ambient lighting (including RGB color control), illumination and dash board lighting
- LED indicators for industrial applications and instrumentation

Product validation

Qualified for Automotive Applications. Product Validation according to AEC-Q100/101.

chanhvinh.com

Description

The LITIX™ Basic+ TLD2331-3EP is a triple channel high-side driver IC with integrated output stages. It is designed to control LEDs with a current up to 80 mA. In typical automotive applications the device is capable of driving 3 red LEDs per chain (total 9 LEDs) with a current up to 60 mA and even above, if not limited by the overall system thermal properties. Practically, the output current is controlled by an external resistor or reference source, independently from load and supply voltage changes.

Table 1 Product summary

Parameter	Symbol	Values
Operating voltage	$V_{S(nom)}$	5.5 V … 40 V
Maximum voltage	$V_{S(max)}$ $V_{OUTx(max)}$	40 V
Nominal output (load) current	$I_{OUTx(nom)}$	60 mA (nominal) when using the automotive supply voltage range 8 V - 18 V. Currents up to $I_{OUTx(max)}$ are possible with low thermal resistance R_{thJA}
Maximum output (load) current	$I_{OUTx(max)}$	80 mA depending on R_{thJA}
Current accuracy at R_{SET} = 10 kΩ	K_{LTx}	300 ±5%
Current consumption in sleep mode	$I_{S(sleep, typ)}$	0.1 µA
Maximum current consumption during fault	$I_{S(fault, ERRN)}$	850 µA or less when fault is detected from another device (disabled via ERRN)

Type	Package	Marking
TLD2331-3EP	PG-TSDSO-14	TLD2331

chanhvinh.com

Table of Contents

1 Block diagram 4
2 Pin configuration 5
2.1 Pin assignment 5
2.2 Pin definitions and functions 5
3 General product characteristics 7
3.1 Absolute maximum ratings 7
3.2 Functional range 8
3.3 Thermal resistance 9
4 Internal supply 10
4.1 Description 10
4.2 Electrical characteristics internal supply and EN pin 12
5 Power stages 14
5.1 Protection 14
5.1.1 Thermal protection 14
5.1.2 Reverse battery protection 15
5.2 Output configuration via IN_SETx and PWMI pins 15
5.2.1 IN_SETx pins 15
5.2.2 Output current adjustment via R_{SET} 15
5.2.3 Output control via IN_SETx 16
5.2.4 IN_SETx pins behavior during device fault management 17
5.2.5 Timing diagrams 17
5.3 Electrical characteristics power stage 19
5.4 Electrical characteristics IN_SETx and PWMI pins for output settings 21
6 Load diagnosis 23
6.1 Error management via ERRN and D-pins 23
6.1.1 ERRN pin 23
6.1.2 D-pin 25
6.2 Open Load (OL) and short OUTx to GND (SC) 26
6.2.1 Fault management (D-pin open or connected with a capacitor to GND) 26
6.2.2 Fault management (D-pin connected to GND) 28
6.3 Single LED Short detection, SLS_REF and DS pins 30
6.3.1 SLS_REF pin 31
6.3.2 DS pin 32
6.3.3 SLS fault detection 32
6.3.4 SLS fault management: D and DS pins open or connected with capacitors to GND (low power consumption mode with retry strategy) 32
6.3.5 SLS fault management: D-pin shorted to GND 33
6.4 Electrical characteristics: Load diagnosis and Overload management 34
7 Application information 37
8 Package outline 38
9 Revision History 39

chanhvinh.com

1 Block diagram

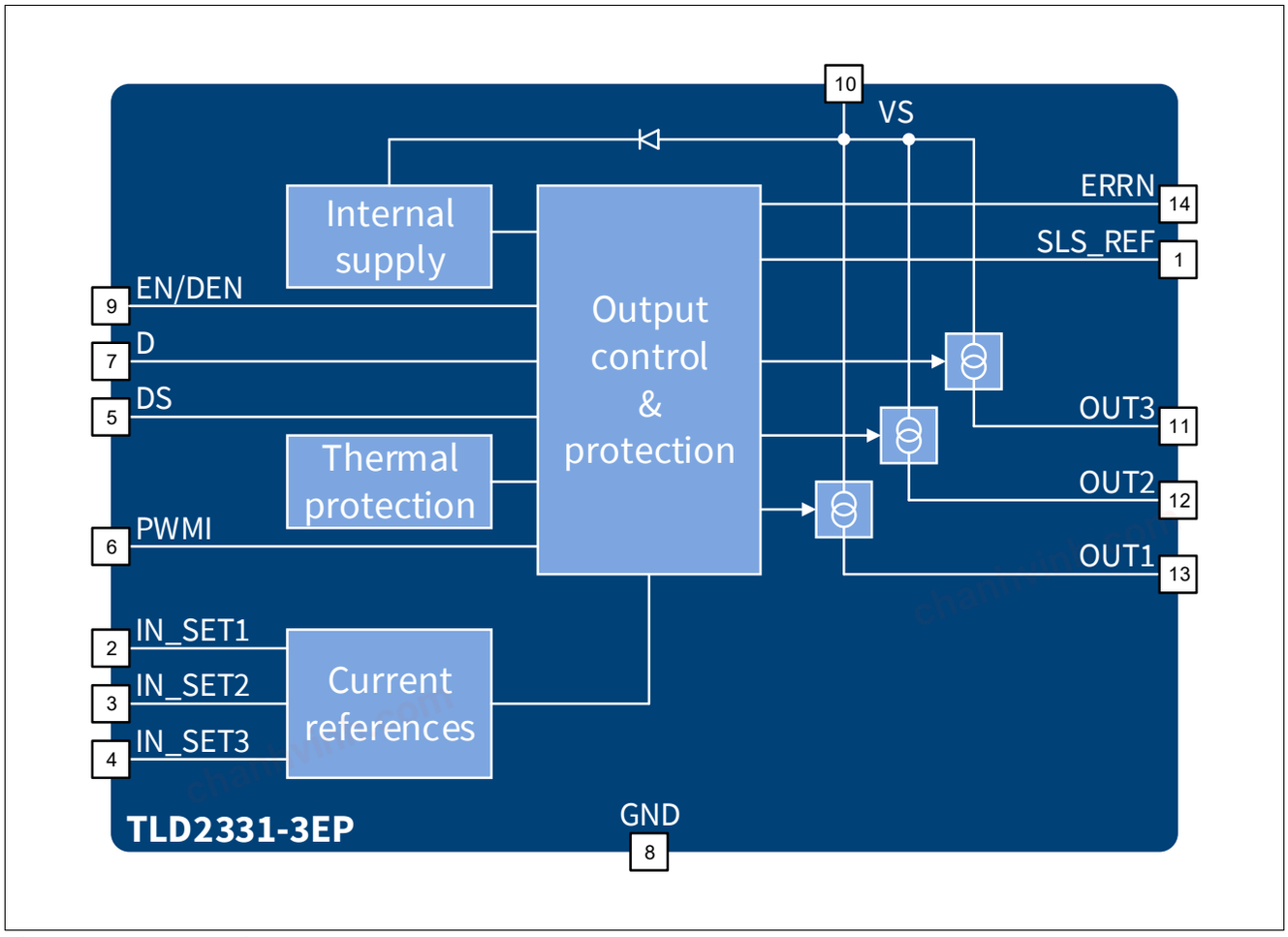

Figure 1 Block diagram

chanhvinh.com

2 Pin configuration

2.1 Pin assignment

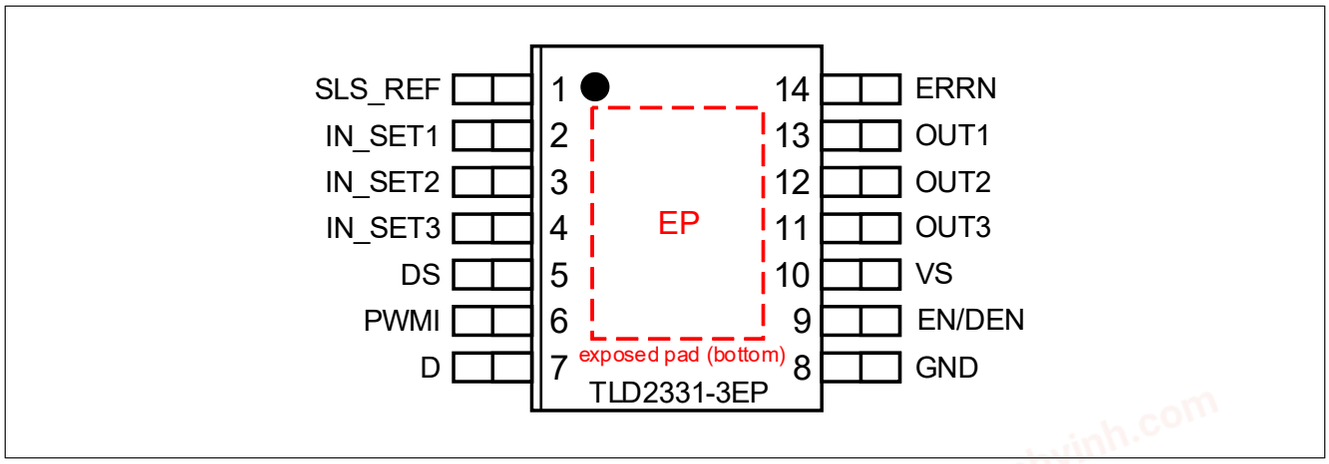

Figure 2 Pin configuration

2.2 Pin definitions and functions

Pin	Symbol	Function
10	VS	**Supply voltage;** Connected to battery or supply control switch, with EMC filter
8	GND	**Ground;** Signal ground
2	IN_SET1	**Control input for OUT1 channel;** Connect to a low power resistor to adjust OUT1 output current. Alternatively, a different current reference (i.e. the OUT_SET of another LITIX™ Basic+ LED Driver) may be connected
3	IN_SET2	**Control input for OUT2 channel;** Connect to a low power resistor to adjust OUT2 output current. Alternatively, a different current reference (i.e. the OUT_SET of another LITIX™ Basic+ LED Driver) may be connected
4	IN_SET3	**Control input for OUT3 channel;** Connect to a low power resistor to adjust OUT3 output current. Alternatively, a different current reference (i.e. the OUT_SET of another LITIX™ Basic+ LED Driver) may be connected
6	PWMI	**PWM input;** Connect to an external PWM controller. If not used, connect to GND
1	SLS_REF	**Single LED short reference input;** Connect to a low power resistor or a voltage reference to adjust Internal SLS threshold. If not used, connect to GND
5	DS	**Single LED short delay/restart input;** Connect to a capacitor, leave open or connect to GND, depending on the required diagnosis management for single LED short detection (see **Chapter 6** for further details)
7	D	**Disable/delay error input;** Connect to a capacitor, leave open or connect to GND, depending on the required diagnosis management (see **Chapter 6** for further details)

chanhvinh.com

Pin configuration

Pin	Symbol	Function
14	ERRN	**ERROR flag I/O;** Open drain, active low. Connect to a pull-up resistor
9	EN/DEN	**Outputs enable and diagnosis control input;** Connect to a control input (i.e. to VS via a resistor divider or a Zener diode) to enable OUTx control and diagnosis capability
13	OUT1	**Channel 1 output pin;** Connect to the target load
12	OUT2	**Channel 2 output pin;** Connect to the target load
11	OUT3	**Channel 3 output pin;** Connect to the target load
Exposed Pad	EP	**Exposed Pad;** Connected to GND-pin in application

chanhvinh.com

3 General product characteristics

3.1 Absolute maximum ratings

Table 2 Absolute maximum ratings[1)]

T_J = -40°C to +150°C; R_{IN_SETx} = 10 kΩ; all voltages with respect to GND, positive current flowing into input and I/O pins, positive current flowing out from output pins (unless otherwise specified)

Parameter	Symbol	Values			Unit	Note or Test Condition	Number
		Min.	Typ.	Max.			
Voltage							
Supply voltage	V_S	-18	–	40	V	–	P_4.1.1
EN/DEN voltage	$V_{EN/DEN}$	-18	–	40	V	–	P_4.1.3
EN/DEN voltage related to V_S: $V_{EN/DEN}$ - V_S	$V_{EN/DEN(VS)}$	-40	–	18	V	–	P_4.1.4
EN/DEN voltage related to V_{OUTx}: $V_{EN/DEN}$ - V_{OUTx}	$V_{EN/DEN(VOUTx)}$	-18	–	40	V	–	P_4.1.5
Output voltages	V_{OUTx}	-1	–	40	V	–	P_4.1.10
Output voltages related to V_S: V_S - V_{OUTx}	$V_{OUTx(VS)}$	-18	–	40	V	–	P_4.1.11
IN_SETx voltages	V_{IN_SETx}	-0.3	–	6	V	–	P_4.1.12
PWMI voltage	V_{PWMI}	-0.3	–	6	V	–	P_4.1.14
ERRN voltage	V_{ERRN}	-0.3	–	40	V	–	P_4.1.18
D Voltage	V_D	-0.3	–	6	V	–	P_4.1.19
DS voltage	V_{DS}	-0.3	–	6	V	–	P_4.1.42
SLS_REF voltage	V_{SLS_REF}	-0.3	–	6	V	–	P_4.1.43
Current							
Output currents (On each output channel OUTn)	I_{OUTx}	0	–	95	mA	–	P_4.1.21
PWMI current	I_{PWMI}	-0.5	–	0.5	mA	–	P_4.1.26
IN_SETx currents	I_{IN_SETx}	0	–	300	µA	–	P_4.1.30
D current	I_D	-0.5	–	0.5	mA	–	P_4.1.31
DS current	I_{DS}	-0.5	–	0.5	mA	–	P_4.1.44
SLS_REF current	I_{SLS_REF}	-0.5	–	0	mA	–	P_4.1.45
Temperature							
Junction temperature	T_J	-40	–	150	°C	–	P_4.1.33
Storage temperature	T_{stg}	-55	–	150	°C	–	P_4.1.34
ESD susceptibility							
ESD susceptibility all pins to GND	V_{ESD}	-2	–	2	kV	HBM[2)]	P_4.1.36

chanhvinh.com

Table 2 Absolute maximum ratings[1)] (cont'd)

T_J = -40°C to +150°C; R_{IN_SETx} = 10 kΩ; all voltages with respect to GND, positive current flowing into input and I/O pins, positive current flowing out from output pins (unless otherwise specified)

Parameter	Symbol	Values			Unit	Note or Test Condition	Number
		Min.	Typ.	Max.			
ESD susceptibility all pins to GND	V_{ESD}	-500	–	500	V	CDM[3)]	P_4.1.37
ESD susceptibility Pin 1, 7, 8, 14 (corner pins) to GND	$V_{ESD1,7,8,14}$	-750	–	750	V	CDM[3)]	P_4.1.38

1) Not subject to production test, specified by design
2) ESD susceptibility, HBM according to ANSI/ESDA/JEDEC JS001 (1.5 kΩ, 100 pF)
3) ESD susceptibility, Charged Device Model "CDM" according JEDEC JESD22-C101

Notes

1. *Stresses above the ones listed here may cause permanent damage to the device. Exposure to absolute maximum rating conditions for extended periods may affect device reliability.*
2. *Integrated protection functions are designed to prevent IC destruction under fault conditions described in the data sheet. Fault conditions are considered as "outside" normal operating range. Protection functions are not designed for continuous repetitive operation.*

3.2 Functional range

Table 3 Functional range

Parameter	Symbol	Values			Unit	Note or Test Condition	Number
		Min.	Typ.	Max.			
Voltage range for normal operation	$V_{S(nom)}$	5.5	–	18	V	–	P_4.2.1
Extended supply voltage for functional range	$V_{S(ext)}$	$V_{SUV(ON)}$	–	40	V	–	P_4.2.2
Junction temperature	T_J	-40	–	150	°C	–	P_4.2.4

Note: Within the Normal Operation range, the IC operates as described in the circuit description. Within the Extended Operation range, parameters deviations are possible. The electrical characteristics are specified within the conditions given in the Electrical Characteristics table.

chanhvinh.com

3.3 Thermal resistance

*Note: This thermal data was generated in accordance with JEDEC JESD51 standards. For more information, go to **www.jedec.org**.*

Table 4 Thermal resistance[1)]

Parameter	Symbol	Values			Unit	Note or Test Condition	Number
		Min.	Typ.	Max.			
Junction to Case	R_{thJC}	–	–	10	K/W	1)2)	P_4.3.1
Junction to Ambient 1s0p board	R_{thJA1}	– –	61 56	– –	K/W	1)3) T_A = 85°C T_A = 135°C	P_4.3.3
Junction to Ambient 2s2p board	R_{thJA2}	– –	45 43	– –	K/W	1)4) T_A = 85°C T_A = 135°C	P_4.3.4

1) Not subject to production test, specified by design

2) Specified R_{thJC} value is simulated at natural convection on a cold plate setup (all pins and exposed pad are fixed to ambient temperature). T_A = 85°C. Total power dissipation = 1.5 W

3) Specified R_{thJA} value is according to Jedec JESD51-3 at natural convection on FR4 1s0p board. The product (chip+package) was simulated on a 76.2 × 114.3 × 1.5 mm board with 70 µm Cu, 300 mm^2 cooling area. Total power dissipation 1.5 W distributed statically and homogenously over all power stages

4) Specified R_{thJA} value is according to Jedec JESD51-5,-7 at natural convection on FR4 2s2p board; The product (chip+package) was simulated on a 76.2 × 114.3 × 1.5 mm board with 2 inner copper layers (2 × 70 µm Cu, 2 × 35 µm Cu). Where applicable a thermal via array under the exposed pad contacted the first inner copper layer. Total power dissipation 1.5 W distributed statically and homogenously over all power stages

chanhvinh.com

4 Internal supply

This chapter describes the internal supply in its main parameters and functionality.

4.1 Description

The internal supply principle is highlighted in the concept diagram of **Figure 3**.

If the voltage applied at the EN/DEN pin is below $V_{EN(th)}$ the device enters sleep mode. In this state all internal functions are switched off and the current consumption is reduced to $I_{S(sleep)}$.

As soon as the voltage applied at the supply pin V_S is above $V_{SUV(ON)}$ and the voltage applied at the EN/DEN pin is above $V_{EN(th)}$, after the power-on reset time t_{POR}, the device is ready to deliver output current from the output stages. The power on reset time t_{POR} has to be taken into account also in relevant application conditions, i. e. with PWM control from *VS* or EN/DEN lines.

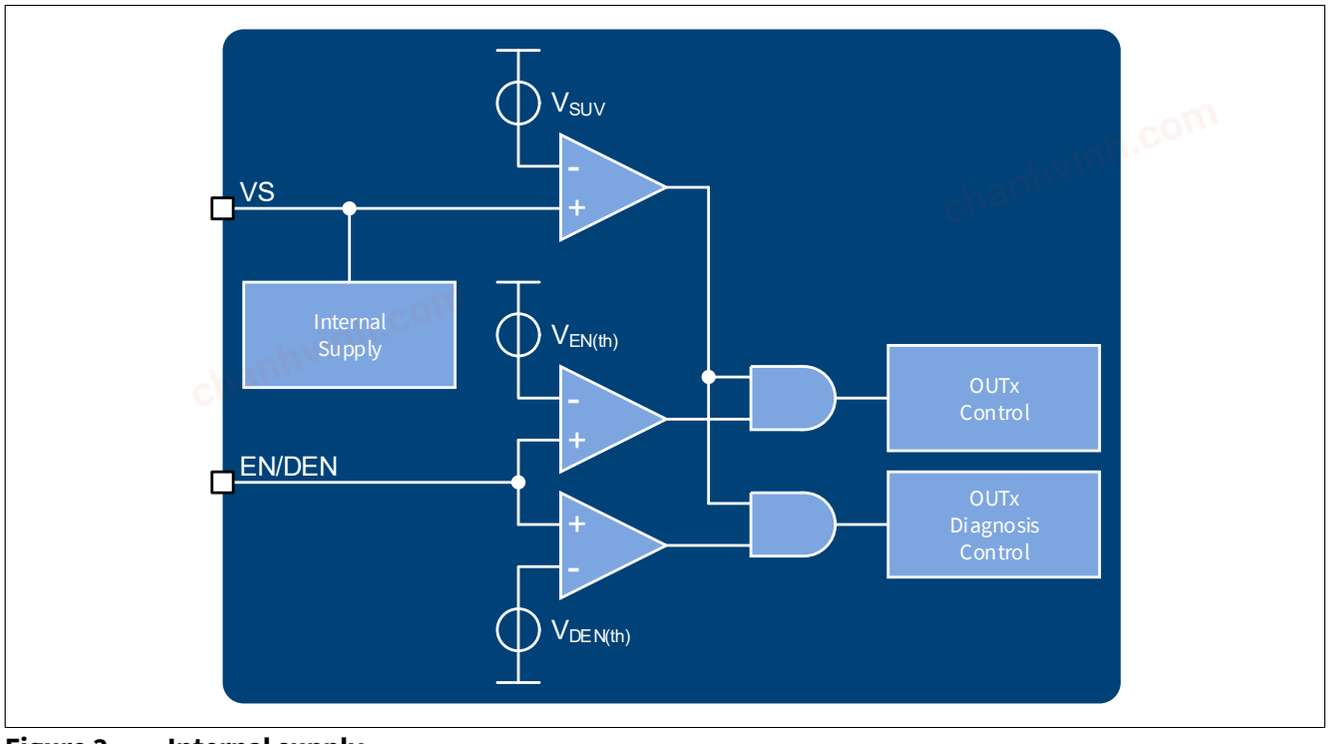

Figure 3 Internal supply

Furthermore, as soon as the voltage applied at the supply pin *VS* is above $V_{SUV(ON)}$ and the voltage applied to the EN/DEN pin V_{EN} is above $V_{DEN(th)}$, the device is ready to detect and report fault conditions via ERRN (error network pin) as described in **Chapter 6**.

To program outputs enable and diagnosis enable via EN/DEN pin there are several possibilities, like a resistor divider from VS to GND, a Zener diode from EN/DEN to VS and also a logic control pin (e.g. from a microcontroller output).

chanhvinh.com

Internal supply

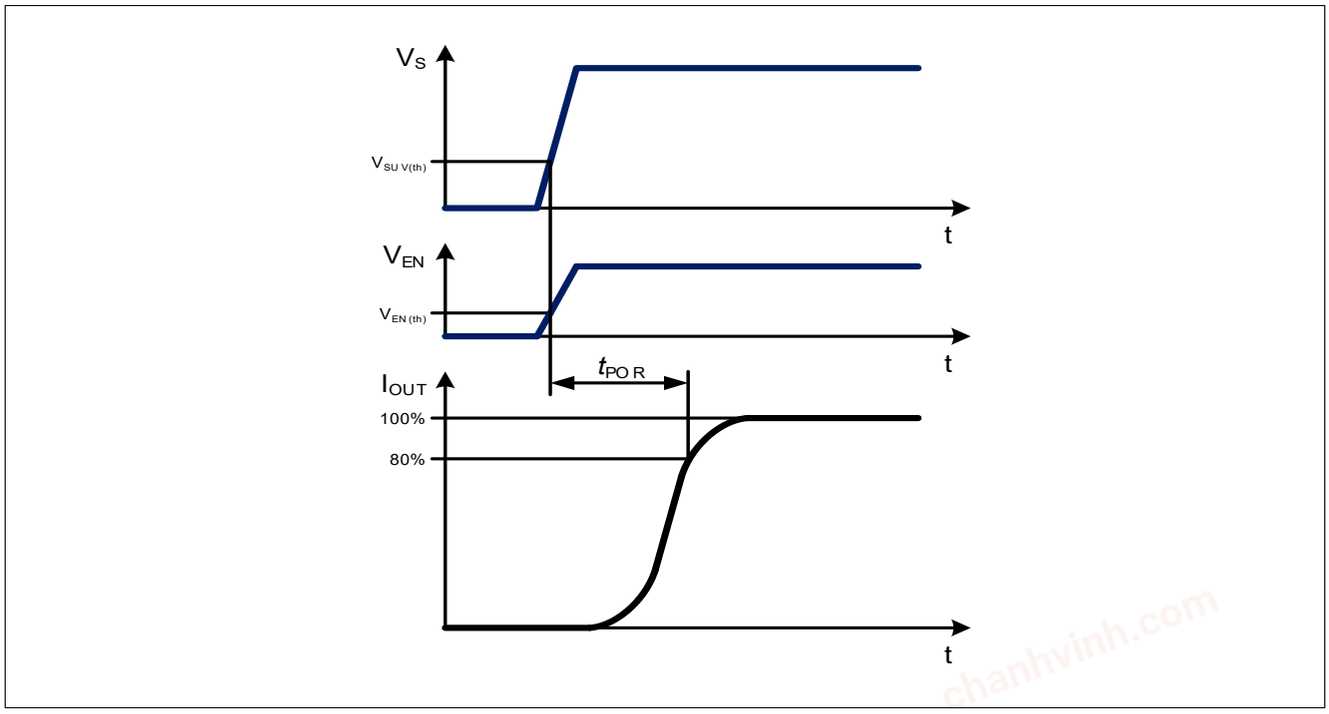

Figure 4 Power on reset timing diagram

chanhvinh.com

4.2 Electrical characteristics internal supply and EN pin

Table 5 Electrical characteristics: Internal supply and EN pin

T_J = -40°C to +150°C; V_S =5.5 V to 18 V; R_{IN_SETx} = 10 kΩ; all voltages with respect to GND, positive current flowing into input and I/O pins, positive current flowing out from output pins (unless otherwise specified)

Parameter	Symbol	Values			Unit	Note or Test Condition	Number
		Min.	Typ.	Max.			
Current consumption, sleep mode	$I_{S(sleep)}$	–	0.1	2	µA	[1] V_{EN} = 0 V T_J < 85°C V_S = 18 V V_{OUTx} = 3.6 V	P_5.2.1
Current consumption, active mode (no fault)	$I_{S(active)}$	–	1.5	3	mA	V_{EN} = 5.5 V I_{IN_SETx} = 0 µA T_J < 105°C V_S = 18 V V_{OUTx} = 3.6 V	P_5.2.3
Current consumption during fault condition triggered from another device sharing ERRN bus (all channels deactivated)	$I_{S(fault, ERRN)}$	–	–	850	µA	V_{EN} = 5.5 V T_J < 105°C V_S = 18 V V_{ERRN} = 0 V V_{OUTx} = 3.6 V D open	P_5.2.4
Current consumption during fault condition (all channels deactivated)	$I_{S(fault, OUT)}$	–	–	1.25	mA	V_{EN} = 5.5 V T_J < 105°C V_S = 18 V V_{OUT1} = 0 V V_{OUT2} = V_{OUT3}= 3.6 V D open	P_5.2.16
Supply thresholds							
Required supply voltage for output activation	$V_{SUV(ON)}$	–	–	5.5	V	V_{EN} = V_S V_{OUTx} = 3 V R_{IN_SETx} = 6.8 kΩ I_{OUTx} > 50% $I_{OUTx(nom)}$	P_5.2.5
Required supply voltage for output deactivation	$V_{SUV(OFF)}$	4.5	–	–	V	V_{EN} = V_S V_{OUTx} = 3 V R_{IN_SETx} = 6.8 kΩ I_{OUTx} < 50% $I_{OUTx(nom)}$	P_5.2.6
Supply voltage activation hysteresis: $V_{SUV(ON)}$ - $V_{SUV(OFF)}$	$V_{SUV(hys)}$	–	200	–	mV	[1] V_{EN} > $V_{EN(th)}$	P_5.2.8

chanhvinh.com

Internal supply

Table 5 Electrical characteristics: Internal supply and EN pin (cont'd)

T_J = -40°C to +150°C; V_S =5.5 V to 18 V; R_{IN_SETx} = 10 kΩ; all voltages with respect to GND, positive current flowing into input and I/O pins, positive current flowing out from output pins (unless otherwise specified)

Parameter	Symbol	Values			Unit	Note or Test Condition	Number
		Min.	Typ.	Max.			
EN pin							
EN outputs enable threshold	$V_{EN(th)}$	1.4	1.65	1.8	V	V_S = 5.5 V V_{PS} = 2 V R_{IN_SETx} = 6.8 kΩ I_{OUTx} = 50% $I_{OUTx(nom)}$	P_5.2.9
DEN diagnosis enable threshold	$V_{DEN(th)}$	2.4	2.5	2.8	V	V_S = 5.5 V	P_5.2.11
DEN diagnosis enable hysteresis	$V_{DEN(hys)}$	–	120	–	mV	1) R_{IN_SETx} = 6.8 kΩ	P_5.2.12
EN/DEN pull-down current	$I_{EN/DEN(PD)}$	–	–	60	µA	1) V_S > 8 V $V_{EN/DEN}$ = 2.8 V	P_5.2.17
EN/DEN pull-down current	$I_{EN/DEN(PD)}$	–	–	110	µA	1) V_S > 8 V $V_{EN/DEN}$ = 5.5 V	P_5.2.14
EN/DEN pull-down current	$I_{EN/DEN(PD)}$	–	–	350	µA	1) V_S > 8 V $V_{EN/DEN}$ = V_S	P_5.2.15
Timing							
Power on reset delay time	t_{POR}	–	–	25	µs	1) V_S rising from 0 V to 13.5 V V_{OUTx} = 3.6 V R_{IN_SETx} = 6.8 kΩ I_{OUTx} = 80% $I_{OUTx(nom)}$	P_5.2.13

1) Not subjected to production test: specified by design

chanhvinh.com

5 Power stages

The three output stages are realized as high-side current sources with an output current up to 80mA. During off state the leakage current at the output stages is minimized in order to prevent a slightly glowing LED.
The maximum output current is limited by the power dissipation and used PCB cooling areas.
For an operating output current control loop, the supply and output voltages have to be considered according to the following parameters:

- Required supply voltage for current control $V_{S(CC)}$
- Voltage drop over through the output stage during current control $V_{PSx(CC)}$
- Required output voltage for current control $V_{OUTx(CC)}$

5.1 Protection

The device provides embedded protective functions, which are designed to prevent IC damage under fault conditions described in this datasheet. Fault conditions are considered as “outside” normal operating range. Protective functions are not designed for continuous nor for repetitive operations.

5.1.1 Thermal protection

A thermal protection circuitry is integrated in the device. It is realized by a temperature monitoring of the output stages.

As soon as the junction temperature exceeds the current reduction temperature threshold $T_{J(CRT)}$ the output current can be reduced by the device by reducing the IN_SETx reference voltage $V_{IN_SETx(ref)}$. This feature greatly helps to avoid LEDs flickering during static output overload conditions. Furthermore, it helps to protect the LEDs, which are mounted thermally close to the device, against overtemperature. If the device temperature still increases, the three output currents decrease close to 0 A. As soon as the device cools down the output currents rise again.

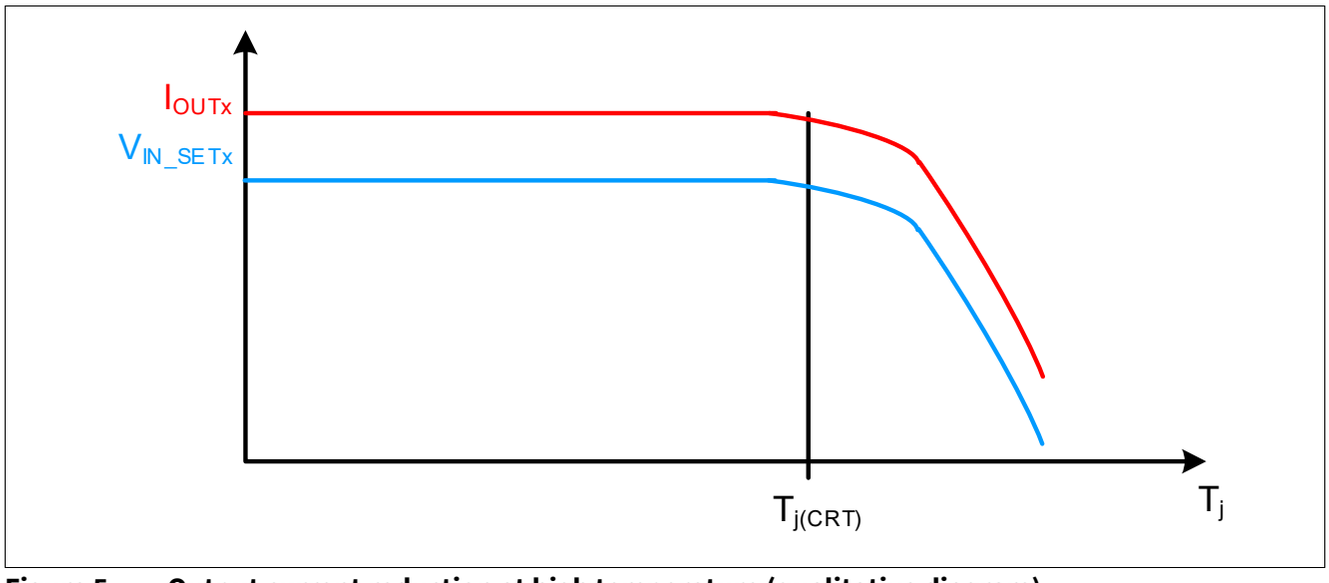

Figure 5 Output current reduction at high temperature (qualitative diagram)

Note: It is assumed that a configuration resistor R_{SET} is applied from IN_SET to GND, and not a current source, to make the protection effective.

chanhvinh.com

5.1.2 Reverse battery protection

The device has an integrated reverse battery protection feature. This feature protects the driver IC itself and, potentially, also connected LEDs. The output reverse current is limited to $I_{OUTx(REV)}$ by the reverse battery protection.

5.2 Output configuration via IN_SETx and PWMI pins

Outputs current can be defined via IN_SETx and pins.

5.2.1 IN_SETx pins

The IN_SETx pins are multiple function pins for the outputs current definition and inputs control.

Output currents definition and analog dimming control can be done defining accordingly the IN_SETx currents.

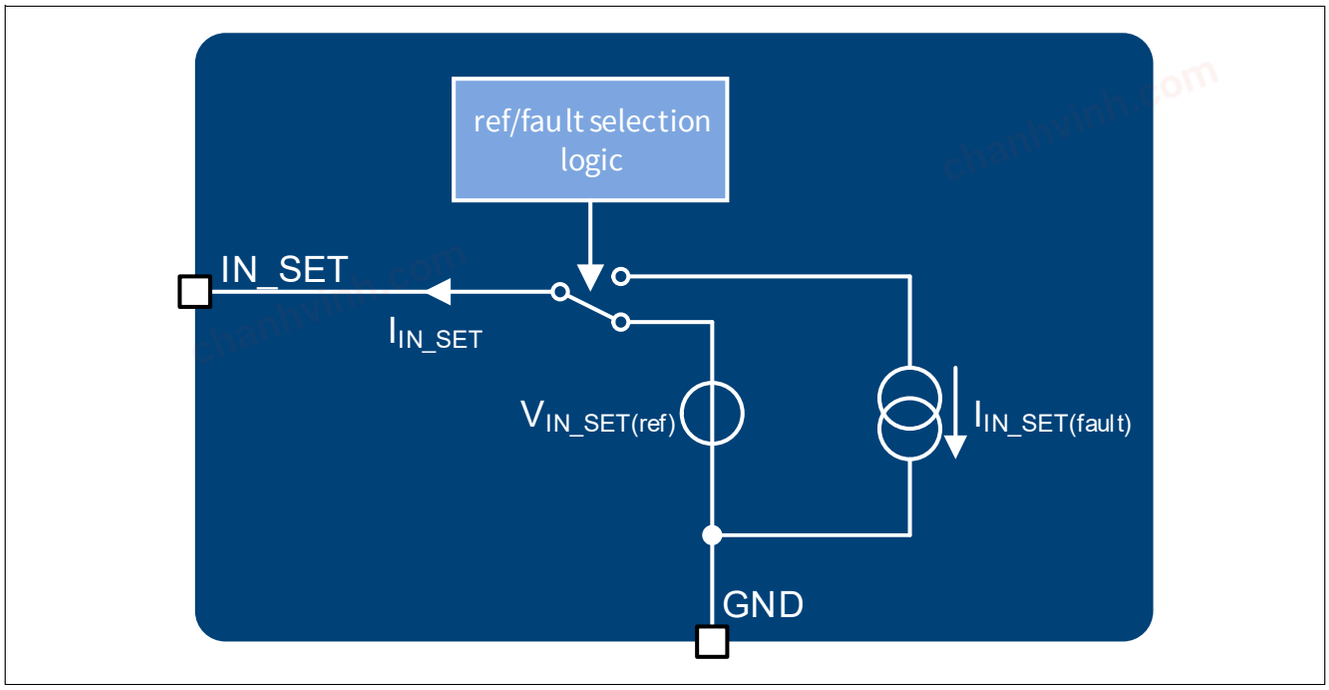

Figure 6 IN_SETx pins block diagram

5.2.2 Output current adjustment via R_{SET}

The output current for the channels can be defined connecting a low power resistor (R_{SETx}) between the IN_SETx pins and GND. The dimensioning of the resistors can be done using the formula:

$$I_{OUTx} = k \cdot I_{IN_SETx} = k \cdot V_{IN_SETx(ref)} / R_{SETx} \quad (5.1)$$

The gain factor k_x (defined as the ratio I_{OUTx}/I_{IN_SETx}) is graphically described in **Figure 7**.

The current through the R_{SETx} is defined by the resistor itself and the reference voltage $V_{IN_SETx(ref)}$, which is applied to the IN_SETx pin when the device is supplied and the channel enabled.

chanhvinh.com

5.2.3 Output control via IN_SETx

The IN_SETx pins can be connected via their R_{SETx} to the open-drain outputs of a microcontroller or to an external NMOS transistor as described in **Figure 9**. This signal can be used to turn off the relative output stages of the IC.

A minimum IN_SETx current of $I_{IN_SETx(ACT)}$ is required to turn on the output stages. This feature is implemented to prevent glowing of LEDs caused by leakage currents on the IN_SETn pins, see again **Figure 7** for details.

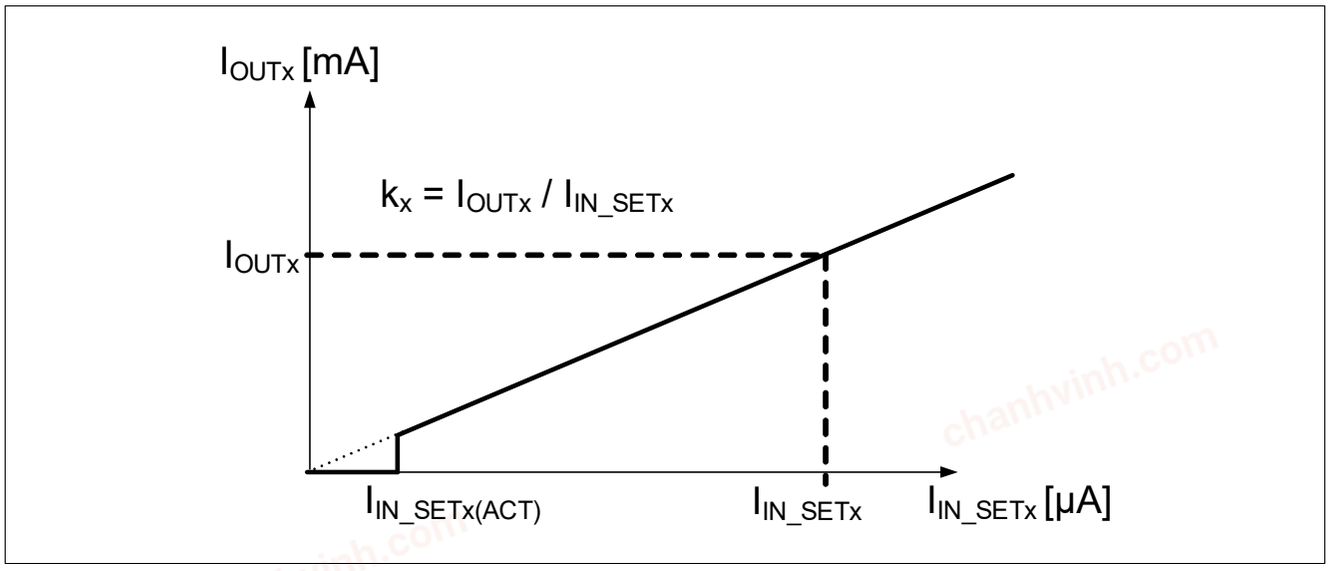

Figure 7 I_{OUTx} vs I_{IN_SETx}

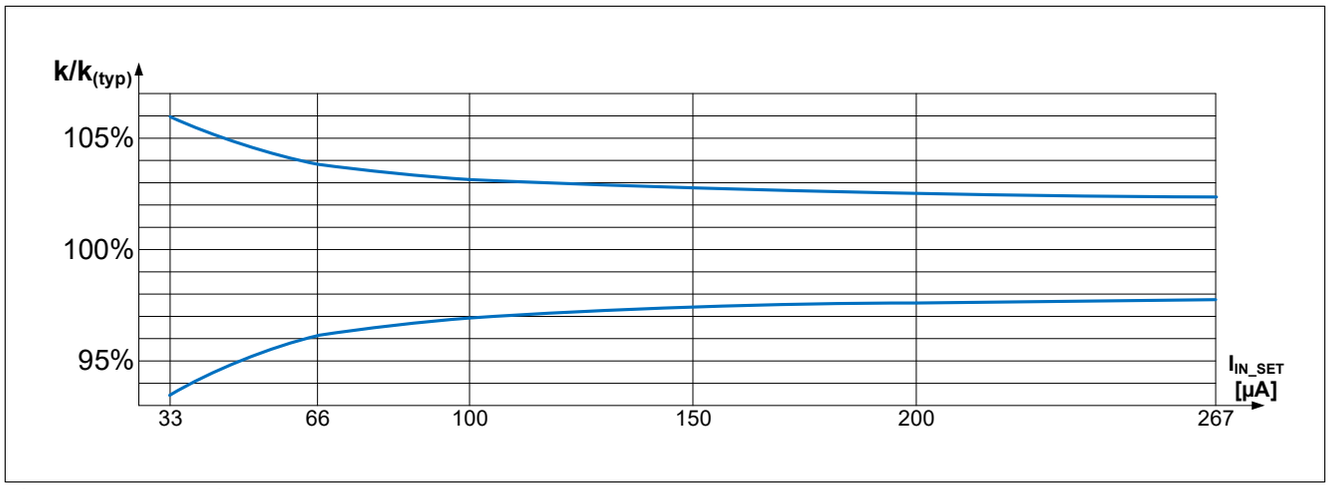

Figure 8 Typical output current accuracy I_{OUT} / I_{IN_SET} at T_J = 25°C

chanhvinh.com

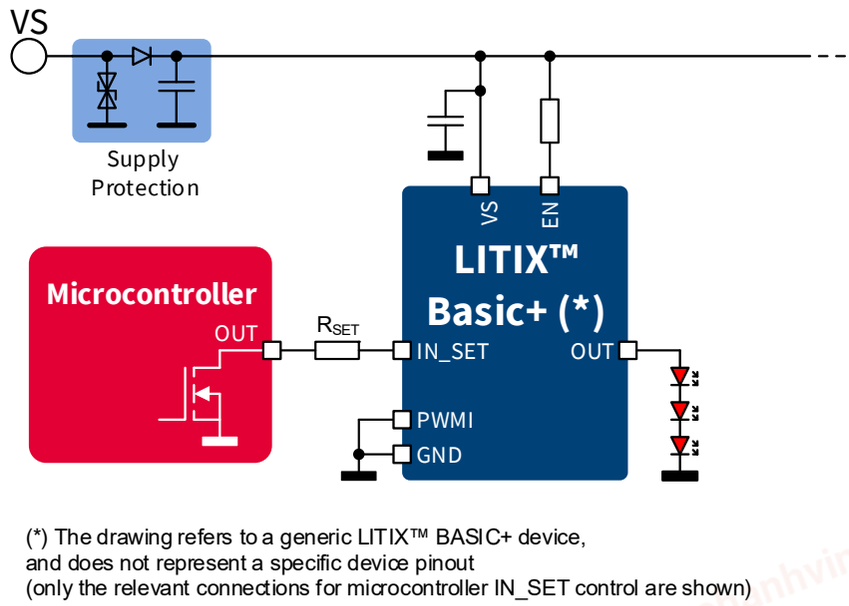

Figure 9 Output control via IN_SET pin and open-drain microcontroller out (simplified diagram)

5.2.4 IN_SETx pins behavior during device fault management

If a fault condition arises on the channel controlled by the IN_SETx pins, once the D-pin reaches the high level threshold $V_{D(th)}$, the current of all the IN_SETx pins is reduced to $I_{IN_SETx(fault)}$, in order to minimise the current consumption of the whole device under fault condition (detailed description is in the load diagnosis section, **Chapter 6**).

5.2.5 Timing diagrams

In the following diagrams (**Figure 10**, **Figure 11**) the influences of different driving inputs on output activation delays are shown.

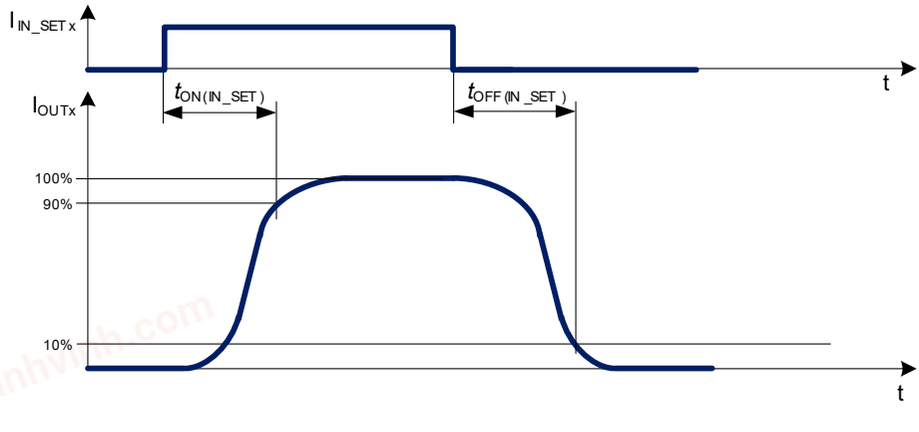

Figure 10 IN_SET turn on and turn off delay timing diagram

chanhvinh.com

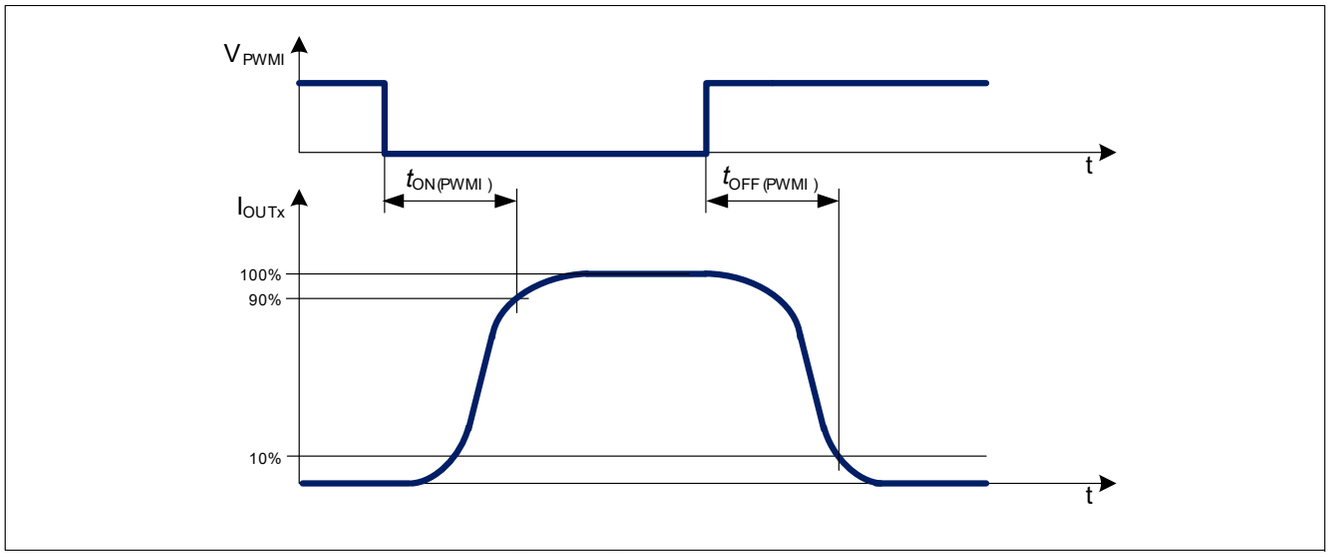

Figure 11 PWMI turn on and turn off timing diagram

chanhvinh.com

5.3 Electrical characteristics power stage

Table 6 Electrical characteristics: Power stage

T_J = -40°C to +150°C; V_S =5.5 V to 18 V; R_{IN_SETx} = 10 kΩ; all voltages with respect to GND, positive current flowing into input and I/O pins, positive current flowing out from output pins (unless otherwise specified)

Parameter	Symbol	Values			Unit	Note or Test Condition	Number
		Min.	Typ.	Max.			
Output leakage currents	$I_{OUTx(leak)}$	–	–	3	µA	[1] V_{ENx} = 5.5 V I_{IN_SETx} = 0 µA V_{OUTx} = 2.5 V T_J = 85°C	P_6.5.1
Output leakage currents	$I_{OUTx(leak)}$	–	–	7	µA	[1] V_{ENx} = 5.5 V I_{IN_SETx} = 0 µA V_{OUTx} = 2.5 V T_J = 150°C	P_6.5.59
Reverse output currents	$I_{OUTx(rev)}$	–	–	3	µA	[1] V_{EN} = V_s V_{Sx} = -18 V Output load: LED with break down voltage < - 0.6 V	P_6.5.2
Output current accuracy							
Output current accuracy	K_{LTx}	279	300	321	–	[1] T_J = 25... 115°C V_S = 8... 18 V V_{PSx} = 2 V I_{IN_SETx} = 33 µA	P_6.5.30
Output current accuracy	K_{ALLx}	267	300	333	–	[1] T_J = -40... 115°C V_S = 8... 18 V V_{PSx} = 2 V I_{IN_SETx} = 33 µA	P_6.5.31
Output current accuracy	K_{LTx}	285	300	315	–	[1] T_J = 25... 115°C V_S = 8... 18 V V_{PSx} = 2 V I_{IN_SETx} = 66 µA	P_6.5.32
Output current accuracy	K_{ALLx}	279	300	321	–	[1] T_J = -40... 115°C V_S = 8... 18 V V_{PSx} = 2 V I_{IN_SETx} = 66 µA	P_6.5.33
Output current accuracy	K_{LTx}	288	300	312	–	[1] T_J = 25... 115°C V_S = 8... 18 V V_{PSx} = 2 V I_{IN_SETx} = 200 µA	P_6.5.34
Output current accuracy	K_{ALLx}	285	300	315	–	[1] T_J = -40... 115°C V_S = 8... 18 V V_{PSx} = 2 V I_{IN_SETx} = 200 µA	P_6.5.35

chanhvinh.com

Table 6 Electrical characteristics: Power stage (cont'd)

T_J = -40°C to +150°C; V_S =5.5 V to 18 V; R_{IN_SETx} = 10 kΩ; all voltages with respect to GND, positive current flowing into input and I/O pins, positive current flowing out from output pins (unless otherwise specified)

Parameter	Symbol	Values			Unit	Note or Test Condition	Number
		Min.	Typ.	Max.			
Required voltage drop during current control $V_{PSx(CC)} = V_S - V_{OUTx}$	$V_{PSx(CC)}$	1.0	–	–	V	[2] V_S = 8... 18 V I_{OUTx} > 90% of $K_{x(typ)}$*I_{IN_SETx}	P_6.5.36
Required voltage drop during current control $V_{PSx(CC)} = V_S - V_{OUTx}$	$V_{PSx(CC)}$	0.65	–	–	V	[2] V_S = 8... 18 V I_{IN_SETx} = 133 µA I_{OUTx} > 90% of $K_{x(typ)}$*I_{IN_SETx} T_J = -40°C	P_6.5.37
Required voltage drop during current control $V_{PSx(CC)} = V_S - V_{OUTx}$	$V_{PSx(CC)}$	0.75	–	–	V	[2] V_S = 8... 18 V I_{IN_SETx} = 133 µA I_{OUTx} > 90% of $K_{x(typ)}$*I_{IN_SETx} T_J = 25°C	P_6.5.38
Required voltage drop during current control $V_{PSx(CC)} = V_S - V_{OUTx}$	$V_{PSx(CC)}$	0.85	–	–	V	[2] V_S = 8... 18V I_{IN_SETx} = 133 µA I_{OUTx} > 90% of $K_{x(typ)}$*I_{IN_SETx} T_J = 150°C	P_6.5.39
Required supply voltage for current control	$V_{S(CC)}$	5.5	–	–	V	V_{EN} = 5.5 V V_{OUTx} = 3 V R_{IN_SETx} = 6.8 kΩ I_{OUTx} > 90% of K_x*I_{IN_SETx}	P_6.5.40
Required output voltage for current control	$V_{OUTx(CC)}$	1.4	–	–	V	V_S = 8... 18 V I_{OUTx} > 90% of K_x*I_{IN_SETx}	P_6.5.41
Current reduction temperature threshold	$T_{J(CRT)}$	–	140	–	°C	[1]	P_6.5.44
Output current during current reduction at high temperature	$I_{OUT(CRT)}$	85% of $I_{OUT(typ)}$	–	–	mA	[1] T_J = 150°C	P_6.5.45

1) Not subjected to production test: specified by design

2) In these test conditions, the parameter $K_{(typ)}$ represents the typical value of output current accuracy.

chanhvinh.com

5.4 Electrical characteristics IN_SETx and PWMI pins for output settings

Table 7 Electrical characteristics: IN_SETx and PWMI pins

T_J = -40°C to +150°C; V_S =5.5 V to 18 V; R_{IN_SETx} = 10 kΩ; all voltages with respect to GND, positive current flowing into input and I/O pins, positive current flowing out from output pins (unless otherwise specified)

Parameter	Symbol	Values			Unit	Note or Test Condition	Number
		Min.	Typ.	Max.			
IN_SETx reference voltage	$V_{IN_SETx(ref)}$	1.195	1.22	1.245	V	[1] V_{EN} = 5.5 V T_J = 25°C	P_6.6.1
IN_SETx reference voltage	$V_{IN_SETx(ref)}$	1.184	1.22	1.256	V	[1] V_{EN} = 5.5 V T_J = -40... 115°C	P_6.6.17
IN_SETx output activation current	$I_{IN_SETx(ACT)}$	–	–	15	µA	V_{EN} = 5.5 V V_{PSx} = 3 V I_{OUTx} > 50% of $K_{x(typ)}$ * I_{IN_SETx}	P_6.6.2
PWMI low threshold	$V_{PWMI(L)}$	1.5	1.7	2	V	V_S = 8 V to 18 V V_{EN} = 5.5 V	P_6.6.6
PWMI high threshold	$V_{PWMI(H)}$	2.5	2.7	3	V	V_S = 8 V to 18 V V_{EN} = 5.5 V	P_6.6.7
Timing							
IN_SETx turn on time	$t_{ON(IN_SETx)}$	–	–	20	µs	[1][2] V_S = 13.5 V V_{PSx} = 4 V I_{IN_SETx} rising from 0 to 180 µA I_{OUTx} = 90% of K_x * I_{IN_SETx}	P_6.6.8
IN_SETx turn off time	$t_{OFF(IN_SETx)}$	–	–	10	µs	[1][2] V_S = 13.5 V V_{PSx} = 4 V I_{IN_SETx} falling from 180 to 0 µA I_{OUTx} = 10% of K_x * I_{IN_SETx}	P_6.6.9
PWMI turn on time	$t_{ON(PWMI)}$	–	–	15	µs	[1][3] V_S = 8 V to 18 V V_{EN} = 5.5 V V_{PWMI} falling from 5 V to 0 V I_{OUTx} = 90% of K_x * I_{IN_SETx} T_J = -40... 115°C	P_6.6.12
PWMI turn off time	$t_{OFF(PWMI)}$	–	–	10	µs	[1][3] V_S = 8 V to 18 V V_{EN} = 5.5 V V_{PWMI} = 0 rising from 0 V to 5 V I_{OUTx} = 10% of K_x * I_{IN_SETx} T_J = -40... 115°C	P_6.6.13

chanhvinh.com

Power stages

1) Not subjected to production test: specified by design
2) Refer to **Figure 10**
3) Refer to **Figure 11**

chanhvinh.com

6 Load diagnosis

6.1 Error management via ERRN and D-pins

Several diagnosis features are integrated in the TLD2331-3EP:

- Open load detection (OL) for any of the output channels OUTx.
- Short circuit OUTx-GND (SC) for any of the output channels OUTx.
- Single LED Short detection (SLS).

6.1.1 ERRN pin

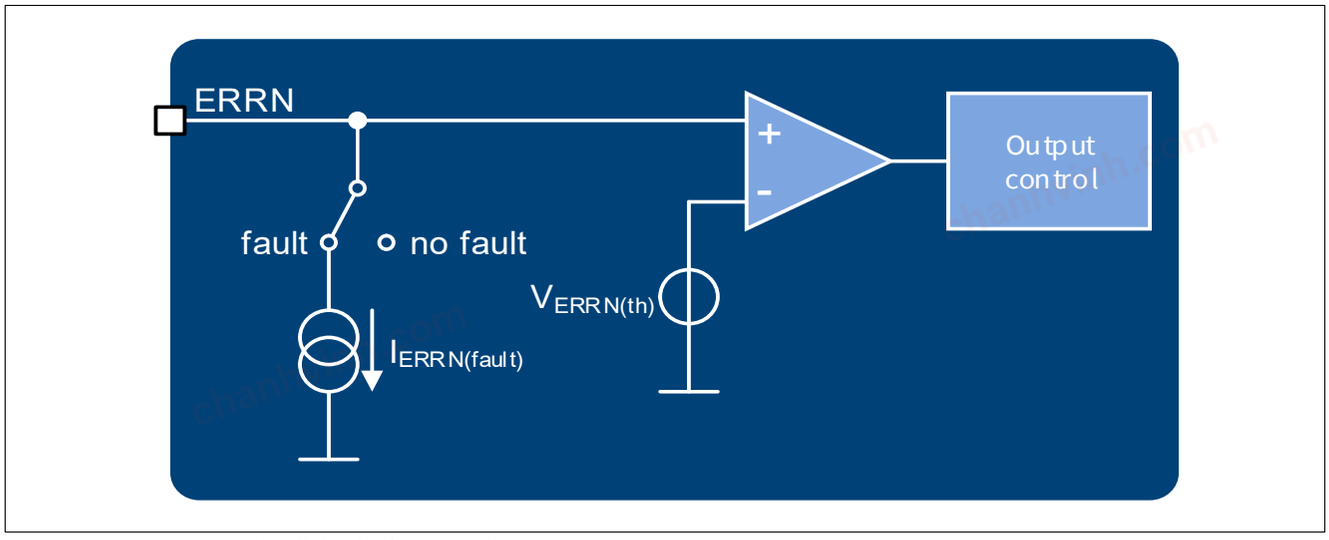

Figure 12 ERRN pin (block diagram)

The device is able to report a detected failure in one of its driven loads and react to a fault detected by another LED driver in the system if a shared error network is implemented (i. e. driving LED chains of the same light function). This is possible with the usage of an external pull-up resistor, allowing multiple devices to share the open drain diagnosis output pin ERRN. All devices sharing the common error network are capable to detect the fault from any of the channels driven by the LITIX™ Basic+ LED drivers and, if desired, to switch multiple loads off.

chanhvinh.com

Load diagnosis

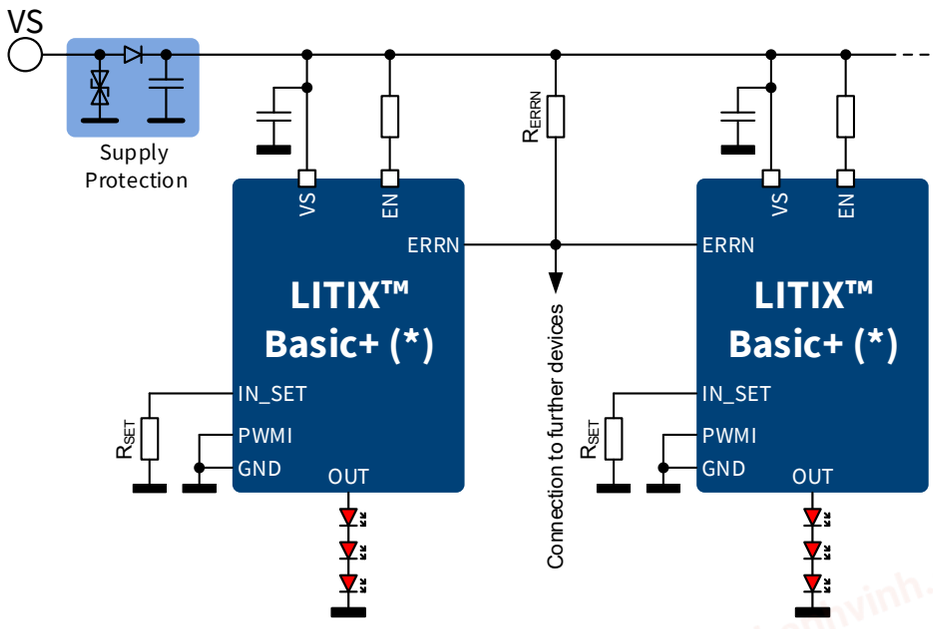

Figure 13 Shared error network principle between LITIX™ Basic+ family devices

When one of the channels is detected to be under fault conditions (for, at least, a filter time t_{fault}), the open-drain ERRN pin sinks a pull-down current $I_{ERRN(fault)}$ toward GND. Therefore an active low state can be detected at ERRN pin when $V_{ERRN} < V_{ERRN(fault)}$ and if this condition is reached, provided the proper setup of the delay pin D, all the channels are switched off. Similarly, when the fault is removed, ERRN pin is put back in high impedance state, and the channels reactivation procedure can be completed once D-pin voltage is below the value $V_{D(th)}$, as illustrated in the timing diagrams in this chapter.

chanhvinh.com

6.1.2 D-pin

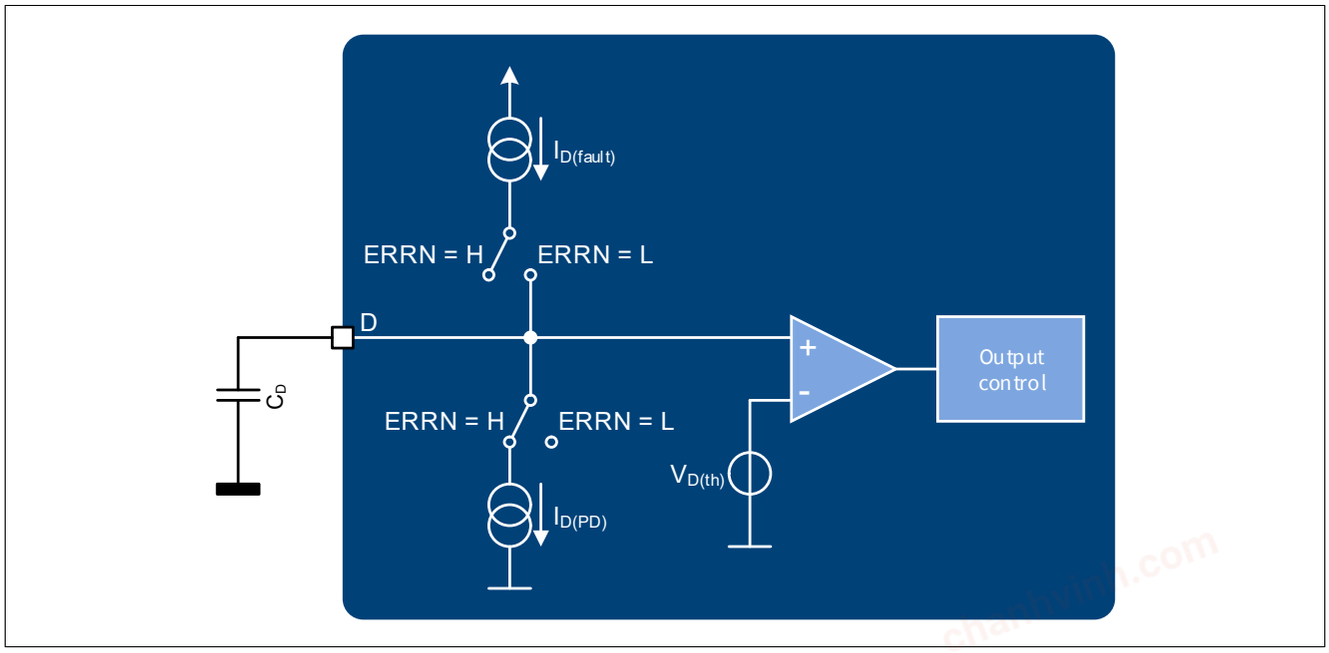

Figure 14 D-pin (block diagram).

The D-pin is designed for 2 main purposes:

- To react to error conditions in LED arrays according to the implemented fault management policy, in systems where multiple LED chains are used for a given light function.
- To extend the channels deactivation delay time of a value t_D, adding a small signal capacitor from the D-pin to GND. In this way, an unstable or noisy fault condition may be prevented from switching off all the channels of a given light function (i.e. driven by several driver ICs sharing the same error network).

The functionality of the D-pin is shown in the **Figure 14** simplified block diagram:

If one LED within one chain fails in open load condition or one of the device outputs are shorted to GND, the respective LED chain is off. Different automotive applications require a complete deactivation of a light function, if the desired brightness of the function (LED array) can not be achieved due to an internal error condition.

In normal operative status (no fault) a pull-down current $I_{D(PD)}$ is sunk from the D-pin to GND. If there is a fault condition (for, at least, a filter time t_{fault}) in one of the LED channels driven by the IC or in any of the devices sharing the same ERRN error network line, a pull-up current $I_{D(fault)}$ is instead sourced from the D-pin. As a consequence, if a capacitive or open load is applied at this pin, its voltage starts rising.

When $V_{D(th)}$ is reached at D-pin, all the channels driven by the device are switched off and if other devices share the same ERRN and D-pins nodes, all the devices turn their outputs off.

Alternatively, if the D-pin is tied to GND, only the channel that has been detected with a fault is safely deactivated.

chanhvinh.com

The capacitor value used at the D-pin, C_D, sets the delay times $t_{D(set/reset)}$ according to the following equations:

$$t_{D(set)} = \frac{C_D \cdot V_{D(th)}}{I_{D(fault)}} \quad (6.1)$$

$$t_{D(reset)} = \frac{C_D \cdot (V_{D(CL)} - V_{D(th)})}{I_{D(PD)}} \quad (6.2)$$

*Note: If the device detects a Single LED Short failure, the D-pin behavior and the overall fault management is slightly different (allows periodical retries with load reactivation, according to DS pin settings too), as described in **Chapter 6.3**.*

6.2 Open Load (OL) and short OUTx to GND (SC)

The behavior of the device during overload conditions that lead to an excess of internal heating up to overtemperature condition, is already described in **Chapter 5**.

Open load (OL) and OUTx shorted to GND (SC) diagnosis features are also integrated in the TLD2331-3EP.

An open load condition is detected if the voltage drop over one of the output stages V_{PSx} is below the threshold $V_{PSx(OL)}$ at least for a filter time t_{fault}.

A short to GND condition is detected if the voltage of one output stages V_{OUTx} is below the threshold $V_{OUTx(SC)}$ at least for a filter time t_{fault}.

6.2.1 Fault management (D-pin open or connected with a capacitor to GND)

With D-pin open or connected with a capacitor to GND configuration, it is possible to switch off all the channels which share a common error network, without the need of an auxiliary microcontroller. For more details refer also to the timing diagram of **Figure 15**, **Figure 16**.

If there is an OL or SC condition on one of the outputs, a pull-up current $I_{OUT(fault)}$ then flows out from the affected channel, replacing the configured output current (but limited by the actual load impedance, e.g. reduced to zero with an ideal open load). Under these conditions, the ERRN pin starts sinking a current $I_{ERRN(fault)}$ toward GND and (with proper dimensioning of the external pull-up resistor) reaches a voltage level below $V_{ERRN(fault)}$.

After $t_{D(set)}$, the voltage $V_{D(th)}$ is reached at D-pin, the IN_SETx goes in a weak pull-down state with a current consumption $I_{IN_SETx(fault)}$ after an additional latency time $t_{IN_SETx(del)}$. The ERRN low voltage can also be used as input signal for a microcontroller to perform the desired diagnosis policy.

The OL and SC error conditions are not latched: as soon as the fault condition is no longer present (at least for a filter time t_{fault}) ERRN goes back to high impedance. When its voltage is above $V_{ERRN(fault)}$, the D-pin voltage starts decreasing and after $t_{D(reset)}$ goes below ($V_{D(th)}$ - $V_{D(th,hys)}$). Then the IN_SETx voltages go up to $V_{IN_SETx(ref)}$, again after a time $t_{IN_SETx(del)}$: at this point, the output stages are activated again. The total time between the fault removal and the IN_SET reactivation $t_{ERR(reset)}$ is extended by an additional latency which depends on the external ERRN pin pull-up and filter circuitry.

chanhvinh.com

Load diagnosis

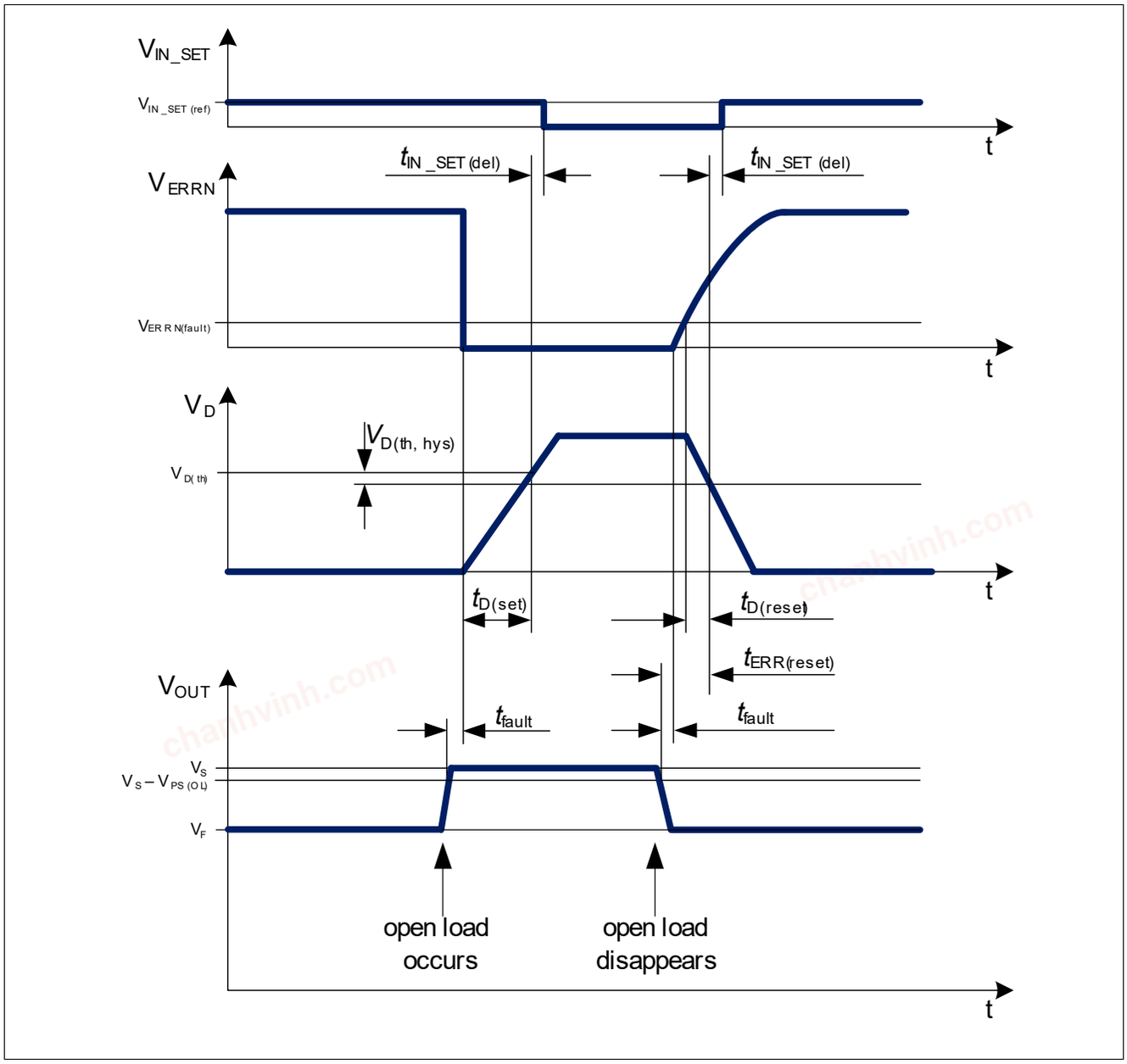

Figure 15 Open load condition timing diagram example (D-pin unconnected or connected to external capacitor to GND, V_F represents the typical forward voltage of the output load)

chanhvinh.com

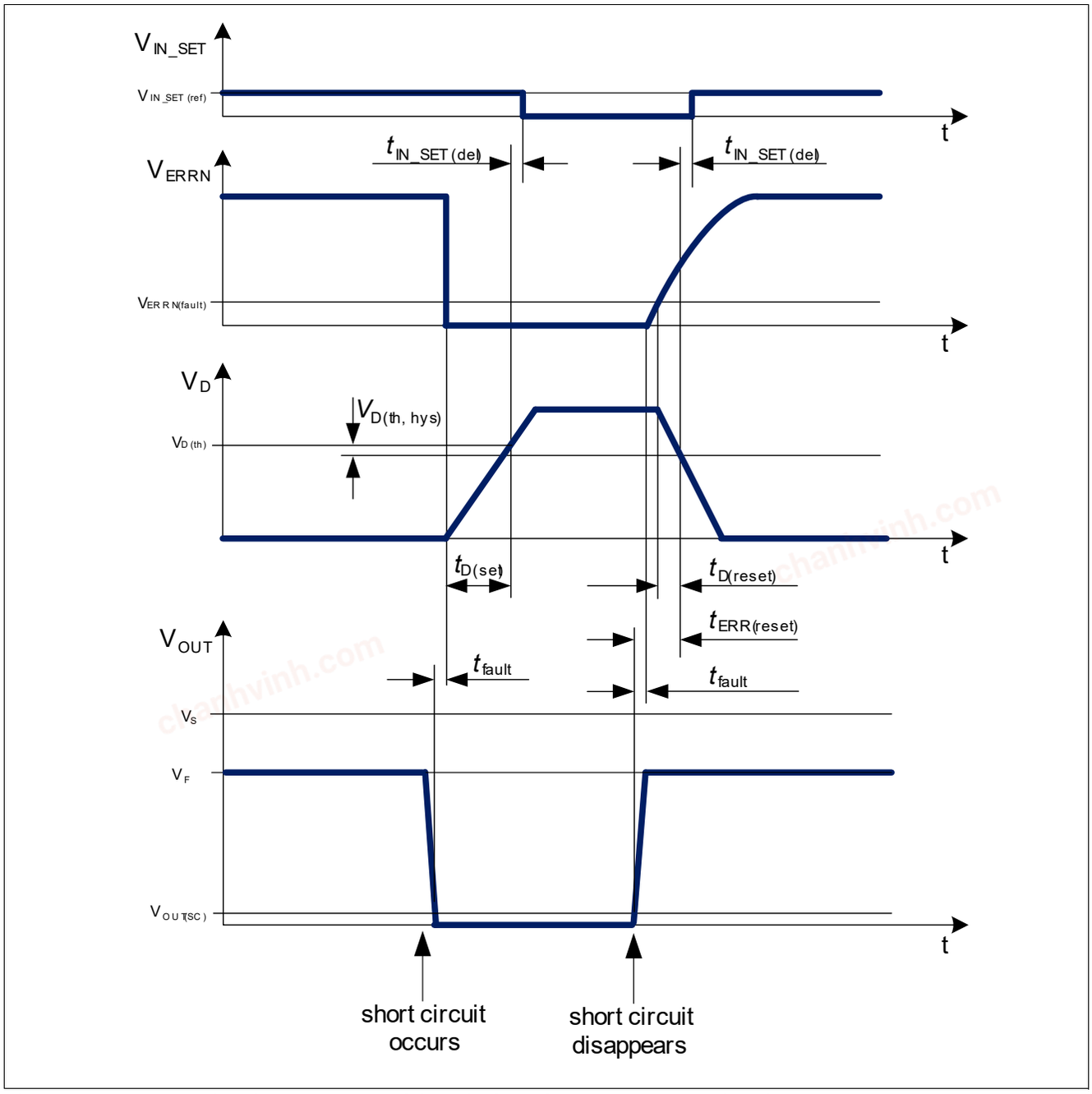

Figure 16 Short circuit to GND condition timing diagram example (D-pin not connected or connected to external capacitor to GND, V_{Fxyz} represents the forward voltage of the output loads)

6.2.2 Fault management (D-pin connected to GND)

With D-pin connected to GND configuration, it is possible to deactivate only the channel under fault conditions, still sharing ERRN pin in a common error network with other devices of LITIX™ Basic+ family.

If there is fault condition on one of the outputs, a pull-up current $I_{OUT(fault)}$ flows out from the affected channel, replacing the configured output current (but limited by the actual load impedance, e.g. reduced to zero with an ideal open load). Under fault conditions the ERRN pin starts sinking a current $I_{ERRN(fault)}$ to ground and the voltage level on this pin will drop below $V_{ERRN(fault)}$ if the external pull-up resistor is properly dimensioned. The ERRN low voltage can also be used as input signal for a µC to perform the desired diagnosis policy.

chanhvinh.com

Load diagnosis

The fault status is not latched: as soon as the fault condition is no longer present (at least for a filter time t_{fault}), ERRN goes back to high impedance and, once its voltage is above $V_{ERRN(fault)}$, finally the output stages are activated again.

Examples of open load or short to GND diagnosis with D-pin open or connected to GND are shown in the timing diagrams of **Figure 17** and **Figure 18**.

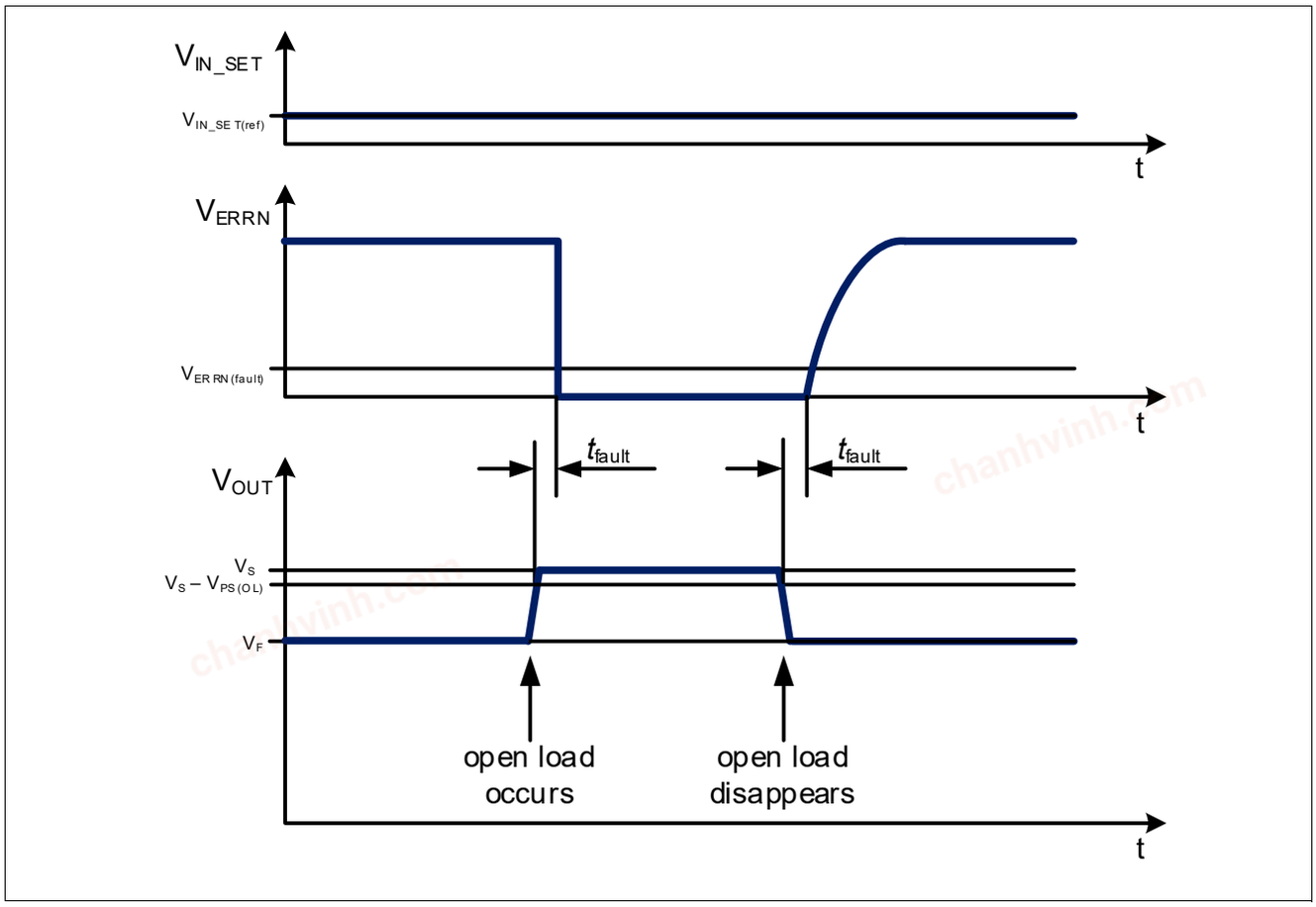

Figure 17 Open load condition timing diagram example (D-pin connected to GND, V_F represents the forward voltage of the output load)

chanhvinh.com

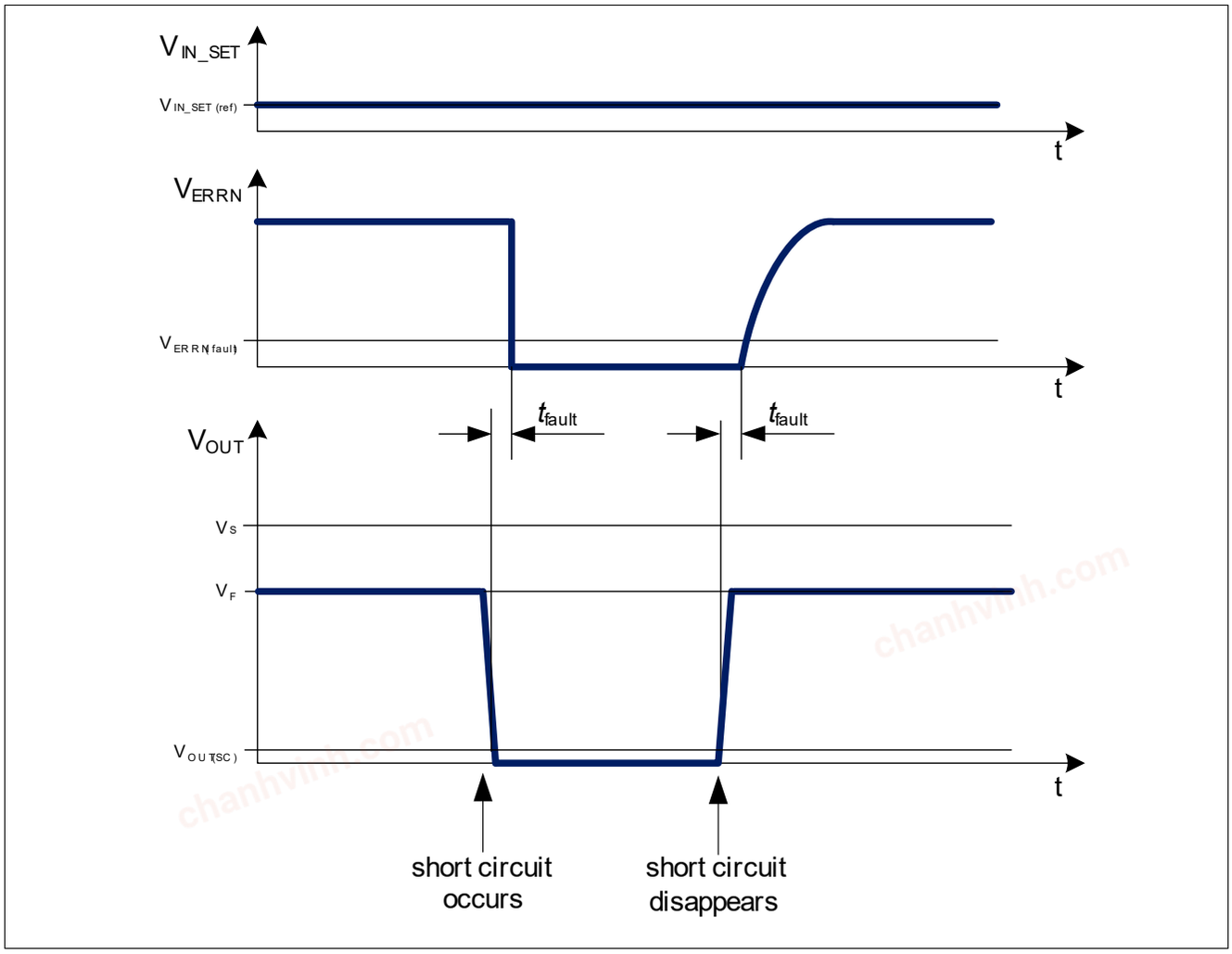

Figure 18 Short circuit condition timing diagram example (D-pin connected to GND, V_F represents the forward voltage of the output load)

6.3 Single LED Short detection, SLS_REF and DS pins

An output single LED short circuit (SLS) detection diagnosis feature is available. This allows an easy detection of loss of luminous flux in the light function due to this failure mode, which does not necessarily result in a condition similar or equivalent to an open load or short to GND condition. To make the SLS error management compliant with the majority of system requirements, the TLD2331-3EP allows the possibility to manage a low current consumption mode with a load reactivation and retry strategy (via D and DS pins connected to external capacitors), or with error detection via ERRN pin monitoring (with D-pin shorted to GND).

chanhvinh.com

6.3.1 SLS_REF pin

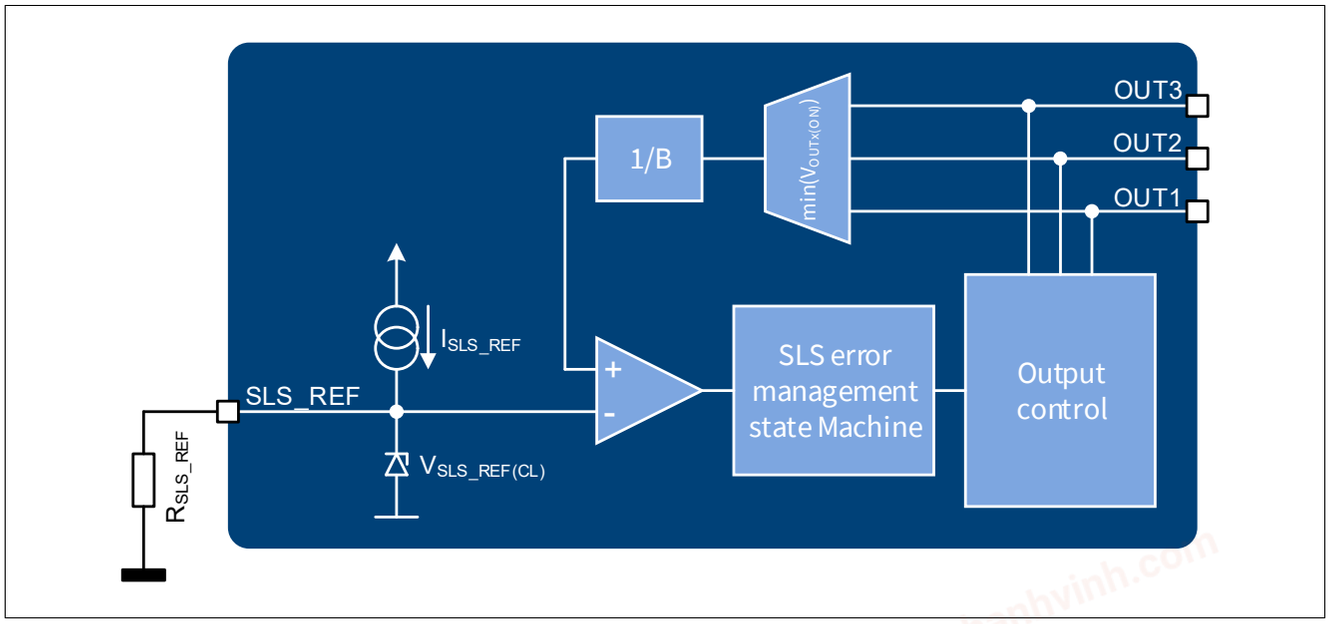

Figure 19 SLS_REF pin (block diagram) with resistor termination

The SLS_REF pin is designed to generate an accurate and tunable reference voltage to allow reliable detection of SLS failure.

This reference can be programmed to adapt the SLS detection to the load related variables (as number of LED in series, load currents, LED forward voltages fluctuation and mismatches, etc.).

The pin provides an accurate reference current I_{SLS_REF} (a replica of I_{IN_SET2}) which can be used to generate the desired reference voltage with an external low cost precision resistor. The voltage V_{SLS_REF} is then internally compared with a fraction of the OUT voltage: if the OUT voltage is below the minimum expected value, then the SLS error management starts (see **Chapter 6.3.3** for more detailed description and reference formulas).

Figure 19 shows the basic block diagram of SLS_REF pin.

chanhvinh.com

6.3.2 DS pin

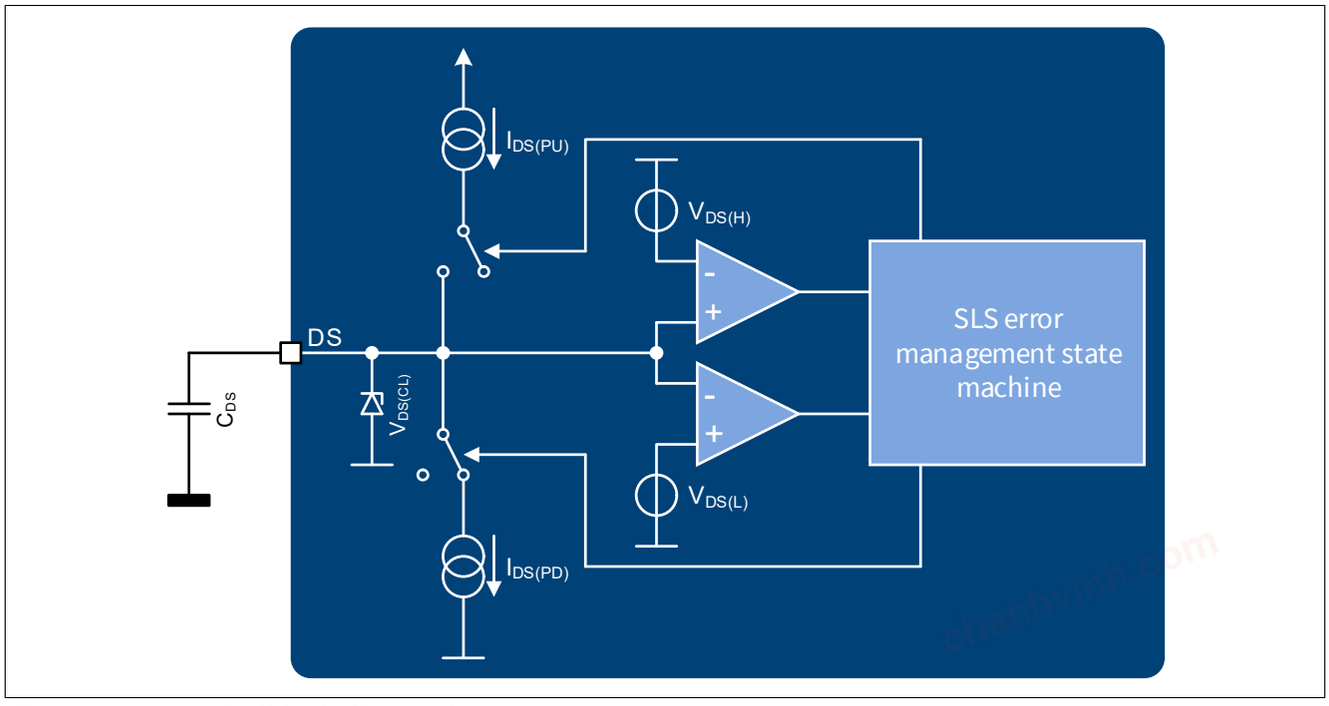

Figure 20 DS pin (block diagram)

The DS pin is used to implement a timer function which allows load reactivation retries during SLS failure.

By default, when no SLS fault is detected, a pull-down current $I_{DS(PD)}$ is sunk from the DS pin to GND. If a SLS fault condition is verified, a capacitor on DS pin allows fault management with minimal current consumption of the device for a time which depends on the capacitive load applied, according to the detailed description of **Chapter 6.3.4**.

6.3.3 SLS fault detection

A single LED anode-cathode short circuit condition is detected if the lowest voltage between OUT1, OUT2 and OUT3 is below a fixed multiple B_{SLS} of the voltage at SLS_REF pin, according to **Equation (6.3)**.The voltage V_{SLS_REF} can be adjusted applying a resistor from SLS_REF to GND, according to **Equation (6.4)** and the parameter K_{SLS_REF} (P_7.5.13).

$$\min(V_{OUT1}, V_{OUT2}, V_{OUT3}) \leq B_{SLS} \cdot V_{SLS_REF} \tag{6.3}$$

$$V_{SLS_REF} = I_{SLS_REF} \cdot R_{SLS_REF} \tag{6.4}$$

6.3.4 SLS fault management: D and DS pins open or connected with capacitors to GND (low power consumption mode with retry strategy)

Under this pin configuration, as described in the title of this chapter, if there is an SLS condition the outputs are turned off when the voltage level $V_{D(th)}$ is reached at D-pin.

Under fault condition the ERRN pin starts sinking a current $I_{ERRN(fault)}$ to ground and the voltage level on this pin will drop below $V_{ERRN(fault)}$ if the external pull-up resistor is properly dimensioned. After $t_{D(set)}$, the voltage $V_{D(th)}$ is reached at D-pin and the IN_SETx pins go into a weak pull-down state with a current consumption $I_{IN_SETx(fault)}$, after an additional latency time $t_{IN_SETx(del)}$.

chanhvinh.com

Load diagnosis

Then (differently from the management of OL and SC detection) the voltage at DS pin also starts rising with a pull-up current $I_{DS(PU)}$, until it reaches the threshold $V_{DS(H)}$, when it starts discharging with the current $I_{DS(PD)}$. Now the DS voltage can cross the lower voltage threshold $V_{DS(L)}$: at this time a full wait time cycle t_{SL_WAIT} is completed and the device performs a load reactivation retry, turning the output currents back on. If the SLS fault condition persists, a new t_{SL_WAIT} cycle is started. If at the end of one wait cycle the fault is not detected anymore, the device goes back to normal operation. The dimensioning of typical t_{SL_WAIT} is ruled by the following equations.

$$t_{DS(rise)} = \frac{C_{DS} \cdot V_{DS(H)}}{I_{DS(PU)}} \tag{6.5}$$

$$t_{DS(fall)} = \frac{C_{DS} \cdot \left(V_{DS(H)} - V_{DS(L)}\right)}{I_{DS(PD)}} \approx \frac{C_{DS} \cdot V_{DS(H)}}{I_{DS(PD)}} \tag{6.6}$$

$$t_{SL(wait)} = t_{DS(rise)} + t_{DS(fall)} + t_{IN_SET(del)} \approx t_{DS(rise)} \tag{6.7}$$

A graphical description is shown in the timing diagram example of **Figure 21**.

With this error management algorithm, it is possible to detect the SLS fault monitoring the device consumption from the VS line, which remains as low as $I_{S(fault)}$ during the whole wait cycle.

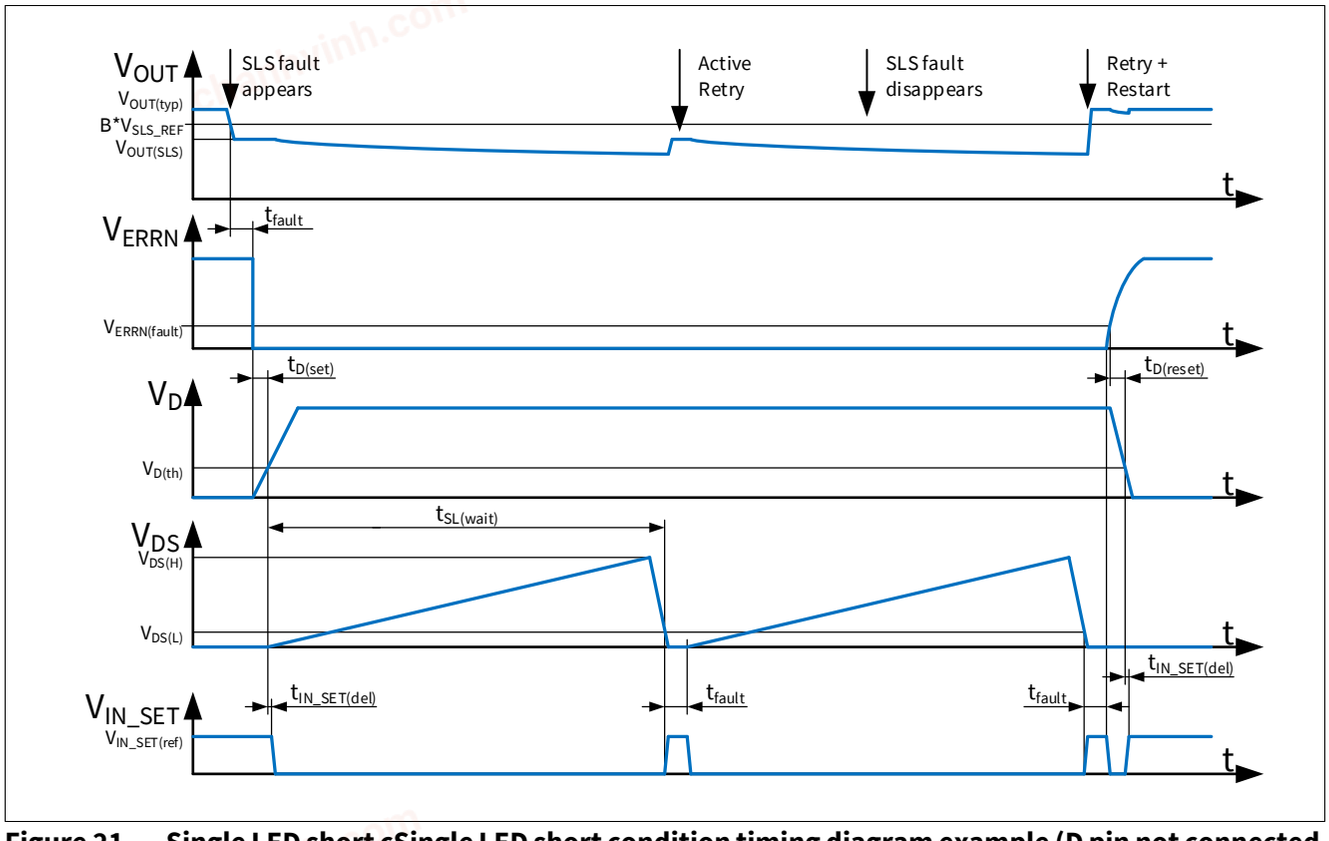

Figure 21 Single LED short cSingle LED short condition timing diagram example (D pin not connected or connected to external capacitor to GND)

6.3.5 SLS fault management: D-pin shorted to GND

Under D-pin shorted to GND configuration, the output affected by a single LED short fault is not turned off, different from an open load or short circuit to GND fault condition. The potential on the IN_SETx pins remains

chanhvinh.com

$V_{IN_SETx(ref)}$, the ERRN pin starts sinking a current $I_{ERRN(fault)}$ toward GND. Again, the resulting ERRN low voltage can be used as input signal for a microcontroller to perform the desired diagnosis policy. Also the SLS status is not latched: as soon as the fault condition is no longer present (at least for a filter time t_{fault}) ERRN goes back to high impedance.

An examples of this SLS diagnosis condition is shown in the timing diagrams of **Figure 22**.

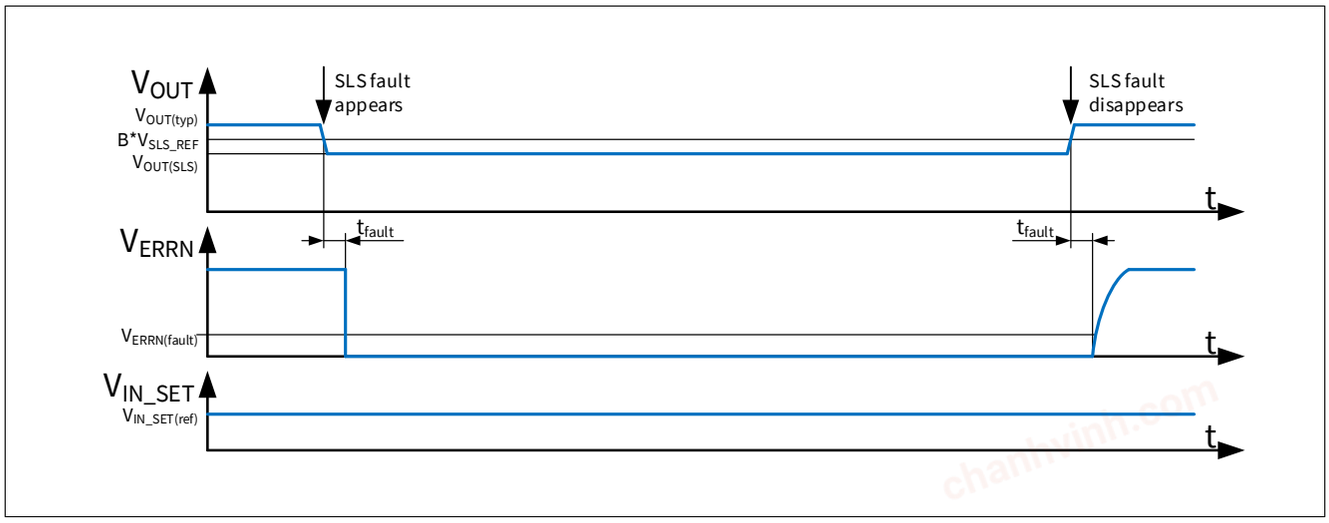

Figure 22 Single LED short condition timing diagram example (D pin shorted to GND)

6.4 Electrical characteristics: Load diagnosis and Overload management

Table 8 Electrical Characteristics: Fault management

T_J = -40°C to +150°C; V_S =5.5 V to 18 V; R_{IN_SETx} = 10 kΩ; all voltages with respect to GND, positive current flowing into input and I/O pins, positive current flowing out from output pins (unless otherwise specified)

Parameter	Symbol	Values			Unit	Note or Test Condition	Number
		Min.	Typ.	Max.			
IN_SET fault current	$I_{IN_SETx(fault)}$	–	–	10	µA	[1] V_S > 8 V V_{OUTx} = 3.6 V V_{ERRN} = 0 V V_{IN_SETx} = 1 V D open V_{EN} > $V_{DEN(th,max)}$	P_7.5.1
ERRN fault current	$I_{ERRN(fault)}$	2	–	–	mA	[1] V_S > 8 V V_{ERRN} = 0.8 V Fault condition V_{EN} > $V_{DEN(th,max)}$	P_7.5.2
ERRN input threshold	$V_{ERRN(th)}$	0.8	–	2.0	V	[1] V_S > 8 V	P_7.5.3
OL detection threshold	$V_{PSx(OL)}$	0.2	–	0.4	V	V_S > 8 V V_{EN} > $V_{DEN(th, max)}$	P_7.5.5
SC detection threshold	$V_{OUTx(SC)}$	0.8	–	1.35	V	V_S > 8 V V_{EN} > $V_{DEN(th, max)}$	P_7.5.6

chanhvinh.com

Table 8 Electrical Characteristics: Fault management (cont'd)

T_J = -40°C to +150°C; V_S =5.5 V to 18 V; R_{IN_SETx} = 10 kΩ; all voltages with respect to GND, positive current flowing into input and I/O pins, positive current flowing out from output pins (unless otherwise specified)

Parameter	Symbol	Values			Unit	Note or Test Condition	Number
		Min.	Typ.	Max.			
Fault detection current	$I_{OUTx(fault)}$	50	–	180	µA	V_S > 8 V V_{OUTx} = 0 V V_{EN} > $V_{DEN(th, max)}$	P_7.5.7
D-pin							
Threshold voltage for function de-activation	$V_{D(th)}$	1.4	1.7	2	V	V_S > 8 V V_{EN}= 5.5 V	P_7.5.8
Threshold hysteresis	$V_{D(hys)}$	–	100	–	mV	[1] V_S > 8 V V_{EN} = 5.5 V V_{OUTx} = $V_{OUTx(OL)}$	P_7.5.9
Fault pull-up current	$I_{D(fault)}$	20	35	50	µA	V_S > 8 V V_{OUTx} = $V_{OUTx(OL)}$ V_D = 2 V	P_7.5.10
Pull-down current	$I_{D(PD)}$	40	60	95	µA	V_S > 8 V V_{EN} = 5.5 V V_D = 1.4 V V_{ERRN} = 2 V V_{PSx} = 3 V No fault conditions	P_7.5.11
Internal clamp voltage	$V_{D(CL)}$	4	–	6	V	V_S > 8 V V_{OUTx} = $V_{OUTx(OL)}$ D-pin open	P_7.5.12
SLS_REF pin							
Relative pull-up current, related to IN_SET2 I_{SLS_REF} / I_{INSET2}	K_{SLS_REF}	0.972	1	1.028	–	V_S > 8 V V_{SLS_REF} = 0.75... 3.25 V I_{IN_SET2} = 50... 270 µA	P_7.5.13
Output attenuation factor for internal reference comparison	B_{SLS}	3.77	3.93	4.09	–	V_S > 14.65 V $min(V_{OUTx})$ = 13 V	P_7.5.21
Output attenuation factor for internal reference comparison	B_{SLS}	3.76	3.93	4.10	–	V_S > 8 V $min(V_{OUTx})$ = 7 V	P_7.5.22
Output attenuation factor for internal reference comparison	B_{SLS}	3.75	3.93	4.11	–	V_S > 8 V $min(V_{OUTx})$ = 5 V	P_7.5.23
Output attenuation factor for internal reference comparison	B_{SLS}	3.73	3.93	4.13	–	V_S > 8 V $min(V_{OUTx})$ = 3 V	P_7.5.24

chanhvinh.com

Load diagnosis

Table 8 Electrical Characteristics: Fault management (cont'd)

T_J = -40°C to +150°C; V_S =5.5 V to 18 V; R_{IN_SETx} = 10 kΩ; all voltages with respect to GND, positive current flowing into input and I/O pins, positive current flowing out from output pins (unless otherwise specified)

Parameter	Symbol	Values			Unit	Note or Test Condition	Number
		Min.	Typ.	Max.			
SLS saturation voltage threshold	$V_{SLS_REF(CL)}$	3.5	–	6	V	V_S > 8 V V_{EN} = 5.5 V V_{PWMI} = 0 V SLS_REF open	P_7.5.14
DS pin							
High threshold voltage (to trigger from pull up to pull-down current)	$V_{DS(H)}$	2.3	2.5	2.7	V	V_S > 8 V V_{SLS_REF} = 1.5 V V_{OUT1} = V_{OUT2} = 7 V V_{OUT3} = 5 V	P_7.5.15
Low threshold voltage for retry activation	$V_{DS(L)}$	0.2	0.3	0.4	V	V_S > 8 V V_{SLS_REF} = 1.5 V V_{OUT1} = V_{OUT2} = 7 V V_{OUT3} = 5 V	P_7.5.16
Pull-up current	$I_{DS(PU)}$	25	35	50	µA	V_S > 8 V V_{SLS_REF} = 1.5 V V_{OUT1} = V_{OUT2} = 7 V V_{OUT3} = 5 V	P_7.5.17
Pull-down current	$I_{DS(PD)}$	300	500	750	µA	V_S > 8 V V_{EN} = 5.5 V V_{DS} = 0.4 V V_{ERRN} = 2 V V_{PSx} = 3 V No fault conditions	P_7.5.18
Timing							
Fault to ERRN activation delay	t_{fault}	40	–	150	µs	[1] V_S > 8 V V_{OUTx} rising from 5 V to V_S V_{EN} > $V_{DEN(th, max)}$	P_7.5.19
Fault appearance/removal to IN_SET deactivation/activation delay	$t_{IN_SET(del)}$	–	–	10	µs	[1] V_S > 8 V OUT open D rising from 0 V to 5 V V_{EN} > $V_{DEN(th, max)}$	P_7.5.20

1) Not subjected to production test: specified by design.

chanhvinh.com

7 Application information

Note: The following information is given as a hint for the implementation of the device only and shall not be regarded as a description or warranty of a certain functionality, condition or quality of the device.

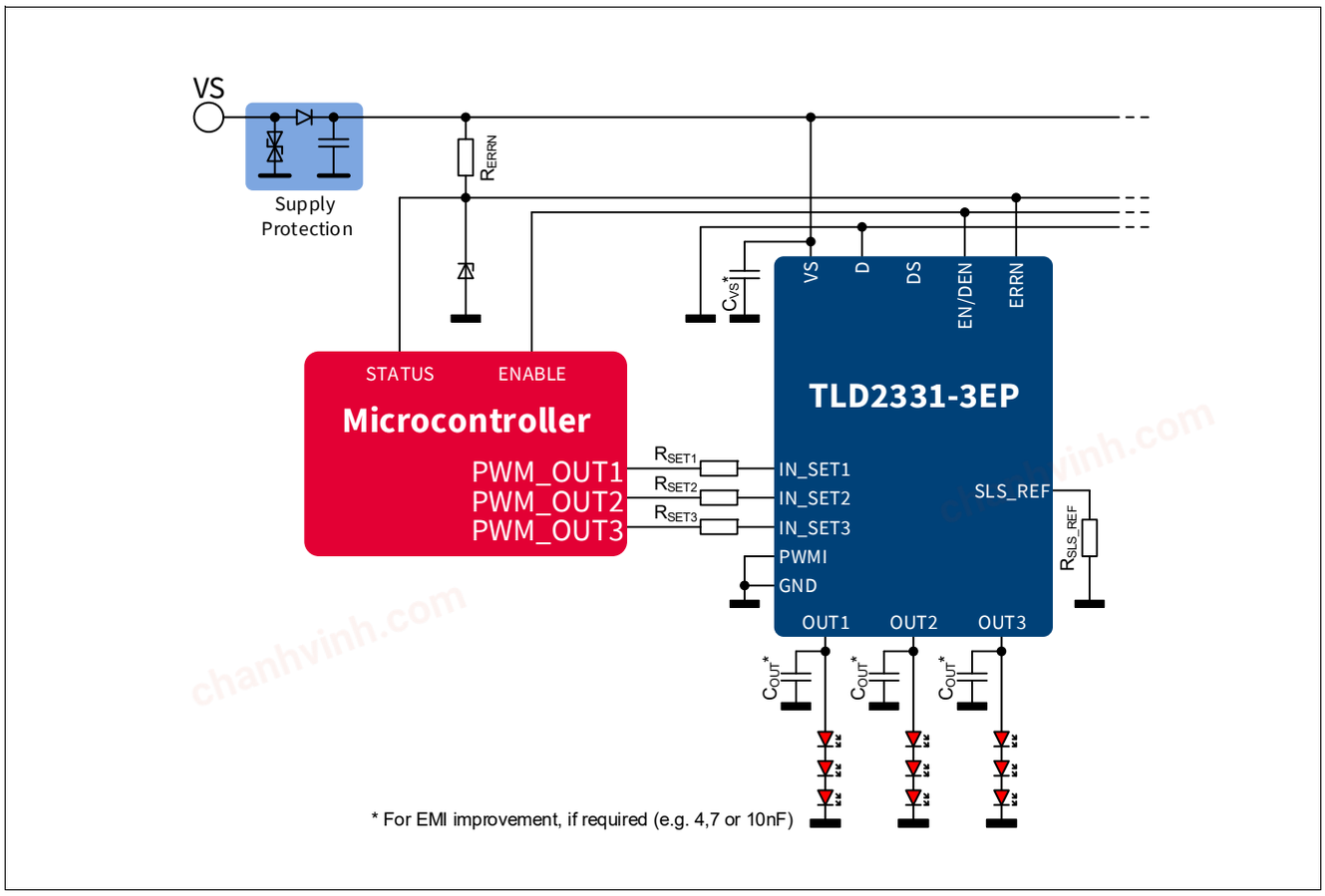

Figure 23 Application diagram example

Note: This is a very simplified example of an application circuit. The function must be verified in the real application.

chanhvinh.com

8 Package outline

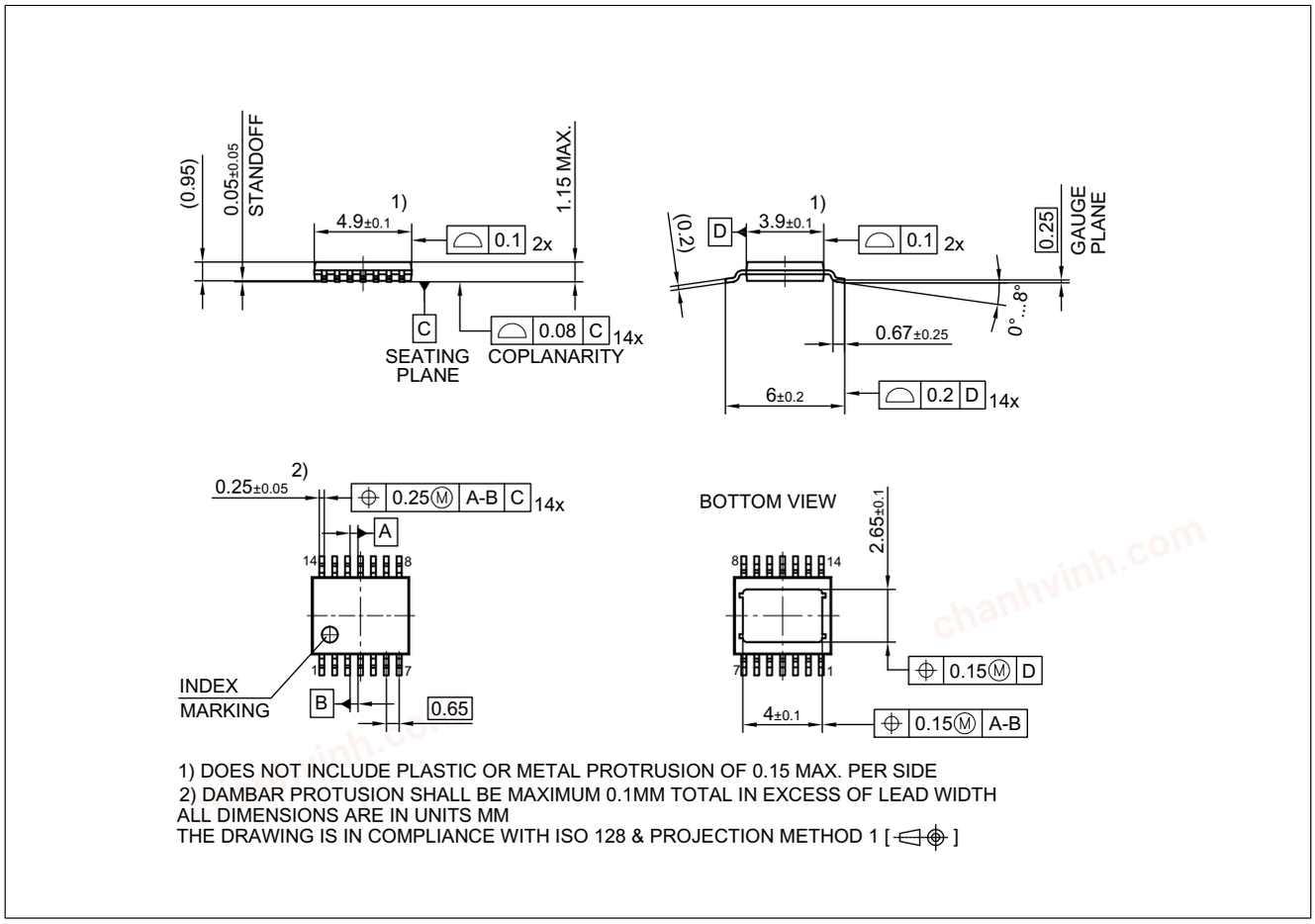

Figure 24 PG-TSDSO-14

Green product (RoHS compliant)

To meet the world-wide customer requirements for environmentally friendly products and to be compliant with government regulations the device is available as a green product. Green products are RoHS-Compliant (i.e Pb-free finish on leads and suitable for Pb-free soldering according to IPC/JEDEC J-STD-020).

Further information on packages

https://www.infineon.com/packages

chanhvinh.com

9 Revision History

Revision	Date	Changes
1.10	2019-09-26	Updated P_4.1.21
1.10	2019-09-26	Corrected copper dimensions in footnote[4] in **Table 4**
1.10	2019-09-26	Updated **Equation (6.1)** and **Equation (6.2)**
1.10	2019-09-26	Specified typical value for $V_{D(th)}$. See P_7.5.8
1.00	2018-10-09	Initial datasheet created

chanhvinh.com

Trademarks
All referenced product or service names and trademarks are the property of their respective owners.

Edition 2019-09-26
Published by
Infineon Technologies AG
81726 Munich, Germany

© 2019 Infineon Technologies AG.
All Rights Reserved.

Do you have a question about any aspect of this document?
Email: erratum@infineon.com

Document reference
LITIX™ Basic+ **TLD2331-3EP**

IMPORTANT NOTICE

The information given in this document shall in no event be regarded as a guarantee of conditions or characteristics ("Beschaffenheitsgarantie").

With respect to any examples, hints or any typical values stated herein and/or any information regarding the application of the product, Infineon Technologies hereby disclaims any and all warranties and liabilities of any kind, including without limitation warranties of non-infringement of intellectual property rights of any third party.

In addition, any information given in this document is subject to customer's compliance with its obligations stated in this document and any applicable legal requirements, norms and standards concerning customer's products and any use of the product of Infineon Technologies in customer's applications.

The data contained in this document is exclusively intended for technically trained staff. It is the responsibility of customer's technical departments to evaluate the suitability of the product for the intended application and the completeness of the product information given in this document with respect to such application.

For further information on technology, delivery terms and conditions and prices, please contact the nearest Infineon Technologies Office (**www.infineon.com**).

WARNINGS

Due to technical requirements products may contain dangerous substances. For information on the types in question please contact your nearest Infineon Technologies office.

Except as otherwise explicitly approved by Infineon Technologies in a written document signed by authorized representatives of Infineon Technologies, Infineon Technologies' products may not be used in any applications where a failure of the product or any consequences of the use thereof can reasonably be expected to result in personal injury.