chanhvinh.com

MOSFET

Metal Oxide Semiconductor Field Effect Transistor

CoolMOS™ C3 800V

800V CoolMOS™ C3 Power Transistor
SPW55N80C3

Data Sheet

Rev. 2.0
Final

Industrial & Multimarket

chanhvinh.com

1 Description

800V CoolMOS™ C3 designed for:
• Industrial application with high DC bulk voltage
• Switching Application (i.e. active clamp forward)

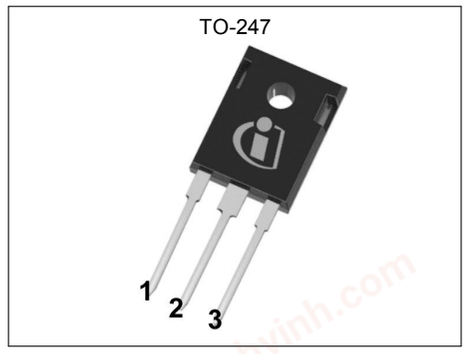

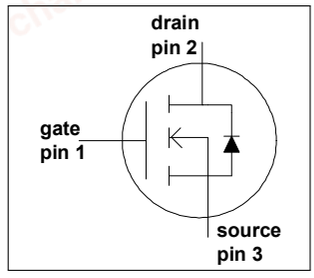

Features

New revolutionary high voltage technology
• Extreme dv/dt rated
• High peak current capability
• Qualified according to JEDEC1) for target applications
• Pb-free lead plating; RoHS compliant
• Ultra low gate charge
• Ultra low effective capacitances

Applications

PFC stages, hard switching PWM stages and resonant switching PWM stages for e.g. PC Silverbox, Adapter, LCD & PDP TV, Lighting, Server, Telecom, UPS and Solar.

Table 1 Key Performance Parameters

Parameter	Value	Unit
V_{DS} @ $T_{j\ max}$	850	V
RDS(on),max	0.085	Ω
Qg,typ	288	nC
ID,pulse	150	A
Eoss @ 400V	21.5	µJ
Body diode di/dt	100	A/µs

Type / Ordering Code	Package	Marking	Related Links
SPW55N80C3	PG-TO 247	55N80C3	see Appendix A

chanhvinh.com

Table of Contents

Description 2
Table of Contents 3
Maximum ratings 4
Thermal characteristics 5
Electrical characteristics 6
Electrical characteristics diagrams 8
Test Circuits 12
Package Outlines 13
Appendix A 14
Revision History 15
Disclaimer 15

chanhvinh.com

2 Maximum ratings

at T_j = 25°C, unless otherwise specified

Table 2 Maximum ratings

Parameter	Symbol	Values			Unit	Note / Test Condition
		Min.	Typ.	Max.		
Continuous drain current[1]	I_D			54.9	A	T_C = 25°C
				34.7		T_C = 100°C
Pulsed drain current[2]	$I_{D,pulse}$			150	A	T_C = 25°C
Avalanche energy, single pulse	E_{AS}			2150	mJ	I_D = 9.5A, V_{DD} = 50V
Avalanche energy, repetitive	E_{AR}			3.26	mJ	I_D = 9.5A, V_{DD} = 50V
Avalanche current, repetitive	I_{AR}			9.5	A	
MOSFET dv/dt ruggedness	dv/dt			50	V/ns	V_{DS} = 0 ... 400V
Gate source voltage	V_{GS}	-20		20	V	static
		-30		30		AC (f > 1 Hz)
Power dissipation (non FullPAK) TO-247	P_{tot}			500.0	W	T_C = 25°C
Operating and storage temperature	T_j, T_{stg}	-55		150	°C	
Mounting torque (non FullPAK) TO-247				60	Ncm	M3 and M3.5 screws
Continuous diode forward current	I_S			47.6	A	T_C = 25°C
Diode pulse current	$I_{S,pulse}$			150	A	T_C = 25°C
Reverse diode dv/dt[3]	dv/dt			4	V/ns	V_{DS} = 0 ... 400V, $I_{SD} \le I_D$, T_j = 25°C
Maximum diode commutation speed	di_f/dt			100	A/µs	

[1] Limited by $T_{j\,max}$. Maximum duty cycle D=0.75
[2] Pulse width t_p limited by $T_{j\,max}$
[3] $V_{peak}<V_{(BR)DSS}$, $T_j<T_{j\,max}$, identical low and high side switch with same Rg

chanhvinh.com

3 Thermal characteristics

Table 3 Thermal characteristics TO-247

Parameter	Symbol	Values			Unit	Note / Test Condition
		Min.	Typ.	Max.		
Thermal resistance, junction - case	R_{thJC}			0.25	°C/W	
Thermal resistance, junction - ambient	R_{thJA}			62	°C/W	leaded
Soldering temperature, wavesoldering only allowed at leads	T_{sold}			260	°C	1.6 mm (0.063 in.) from case for 10s

chanhvinh.com

4 Electrical characteristics

at T_j = 25°C, unless otherwise specified

Table 4 Static characteristics

Parameter	Symbol	Values			Unit	Note / Test Condition
		Min.	Typ.	Max.		
Drain-source breakdown voltage	$V_{(BR)DSS}$	800			V	V_{GS} = 0V, I_D = 0.25mA
Gate threshold voltage	$V_{GS(th)}$	2.1	3	3.9	V	V_{DS} = V_{GS}, I_D = 3.3mA
Zero gate voltage drain current	I_{DSS}			25	µA	V_{DS} = 800V, V_{GS} = 0V, T_j = 25°C
			150			V_{DS} = 800V, V_{GS} = 0V, T_j = 150°C
Gate-source leakage current	I_{GSS}			100	nA	V_{GS} = 20V, V_{DS} = 0V
Drain-source on-state resistance	$R_{DS(on)}$		0.077	0.085	Ω	V_{GS} = 10V, I_D = 32.6A, T_j = 25°C
			0.199			V_{GS} = 10V, I_D = 32.6A, T_j = 150°C
Gate resistance	R_G		0.8		Ω	f = 1MHz, open drain

Table 5 Dynamic characteristics

Parameter	Symbol	Values			Unit	Note / Test Condition
		Min.	Typ.	Max.		
Input capacitance	C_{iss}		7520		pF	V_{GS} = 0V, V_{DS} = 100V, f = 1MHz
Output capacitance	C_{oss}		305		pF	
Effective output capacitance, energy related[1)]	$C_{o(er)}$		1535		pF	V_{GS} = 0V, V_{DS} = 0 ... 400V
Effective output capacitance, time related[2)]	$C_{o(tr)}$		277		pF	I_D = constant, V_{GS} = 0V, V_{DS} = 0 ... 400V
Turn-on delay time	$t_{d(on)}$		45		ns	V_{DD} = 400V, V_{GS} = 13V, I_D = 54.9A, R_G = 3.4Ω
Rise time	t_r		21		ns	
Turn-off delay time	$t_{d(off)}$		200		ns	
Fall time	t_f		9		ns	

Table 6 Gate charge characteristics

Parameter	Symbol	Values			Unit	Note / Test Condition
		Min.	Typ.	Max.		
Gate to source charge	Q_{gs}		42		nC	V_{DD} = 480V, I_D = 54.9A, V_{GS} = 0 to 10V
Gate to drain charge	Q_{gd}		125		nC	
Gate charge total	Q_g		288		nC	
Gate plateau voltage	$V_{plateau}$		5.5		V	

[1)] $C_{o(er)}$ is a fixed capacitance that gives the same stored energy as C_{oss} while V_{DS} is rising from 0 to 400V

[2)] $C_{o(tr)}$ is a fixed capacitance that gives the same charging time as C_{oss} while V_{DS} is rising from 0 to 400V

chanhvinh.com

Table 7 Reverse diode characteristics

Parameter	Symbol	Values			Unit	Note / Test Condition
		Min.	Typ.	Max.		
Diode forward voltage	V_{SD}		0.95		V	V_{GS} = 0V, I_F = 54.9A, T_j = 25°C
Reverse recovery time	t_{rr}		1050		ns	V_R = 400V, I_F = 54.9A, dI_F/dt = 100A/µs
Reverse recovery charge	Q_{rr}		43		µC	
Peak reverse recovery current	I_{rrm}		78		A	

chanhvinh.com

5 Electrical characteristics diagrams

Table 8

Power dissipation	Safe operating area
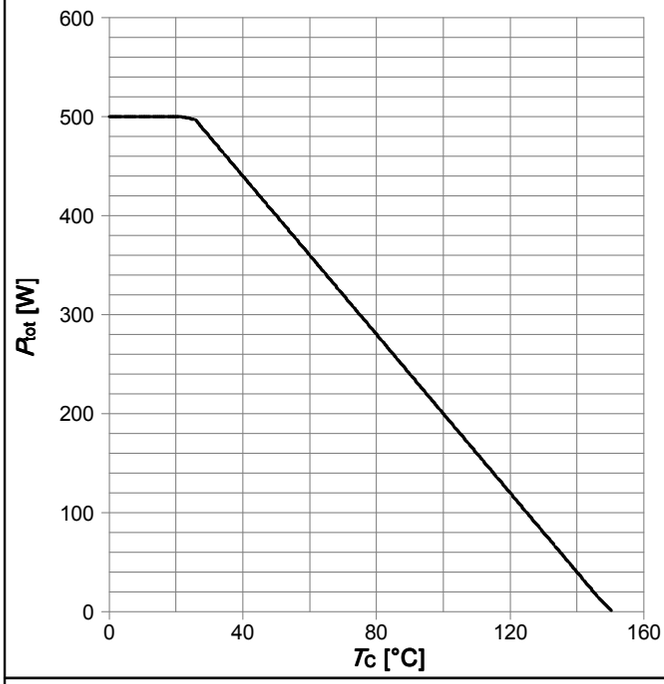	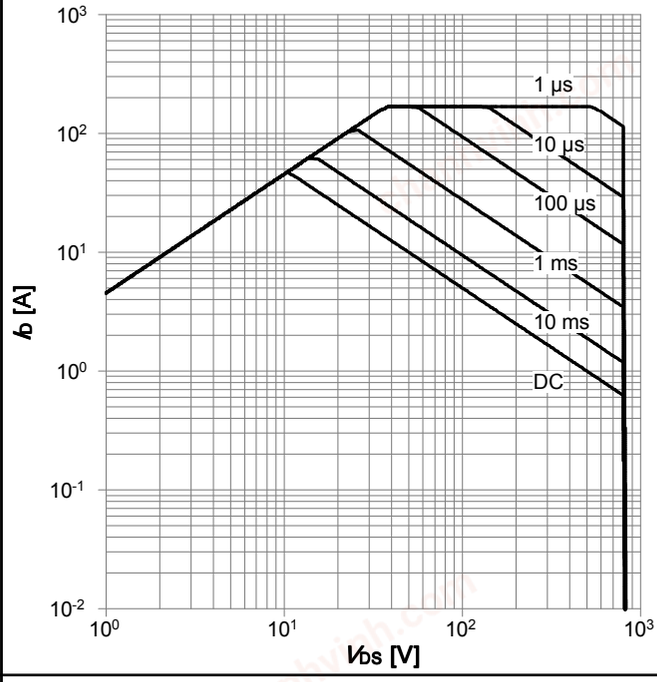
$P_{tot}=f(T_C)$	$I_D=f(V_{DS})$; VGS>7V; T_C=25 °C; D=0; parameter: t_p

Table 9

Safe operating area	Max. transient thermal impedance
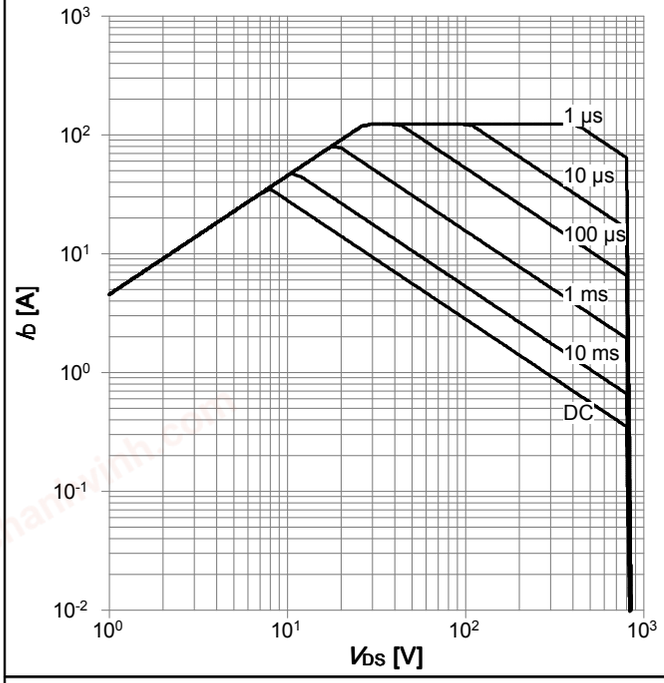	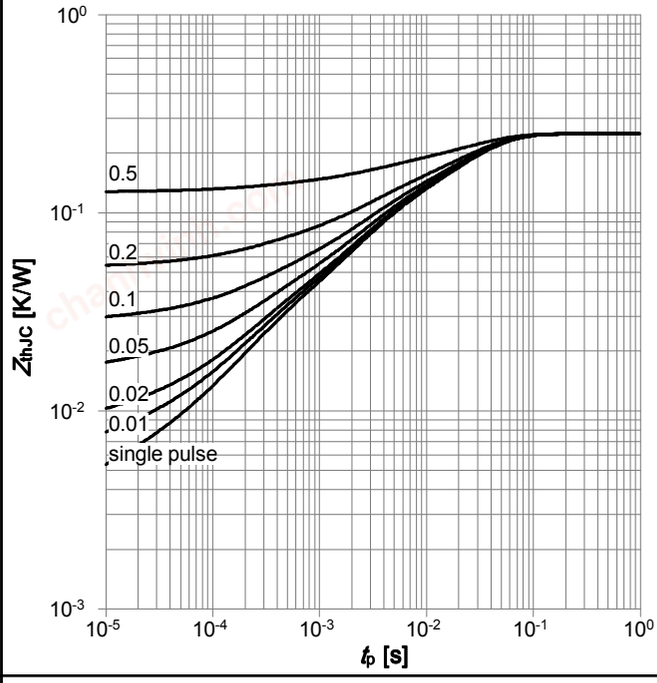
$I_D=f(V_{DS})$;VGS>7V; T_C=80 °C; D=0; parameter: t_p	$Z_{thJC}=f(t_P)$; parameter: $D=t_p/T$

chanhvinh.com

Table 10

Typ. output characteristics	Typ. output characteristics
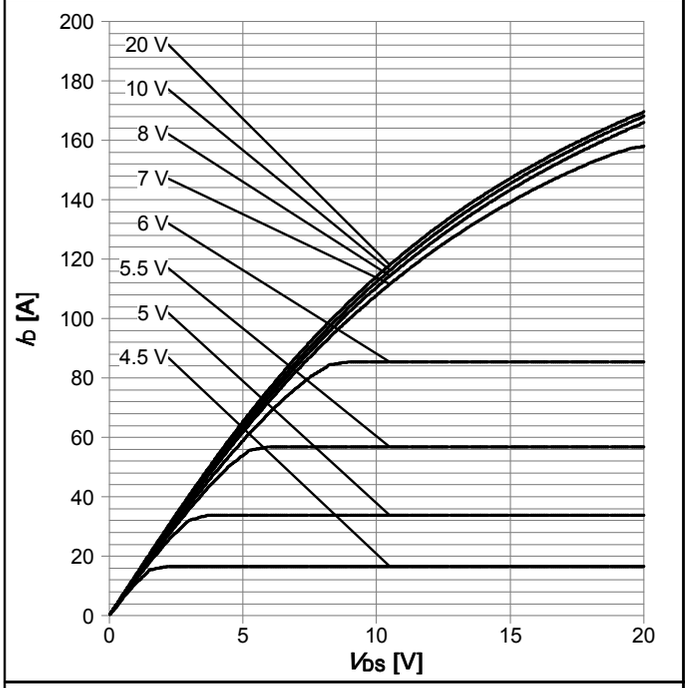	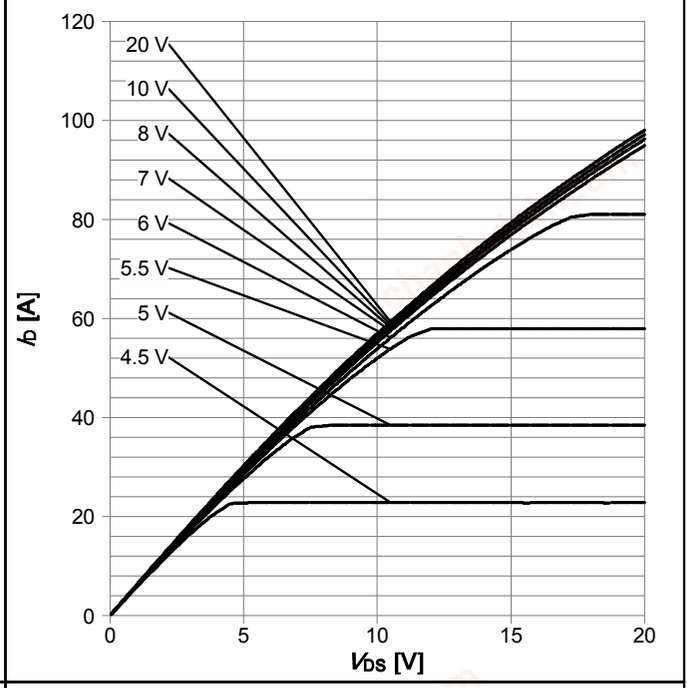
$I_D=f(V_{DS})$; $T_j=25$ °C; parameter: V_{GS}	$I_D=f(V_{DS})$; $T_j=125$ °C; parameter: V_{GS}

Table 11

Typ. drain-source on-state resistance	Drain-source on-state resistance
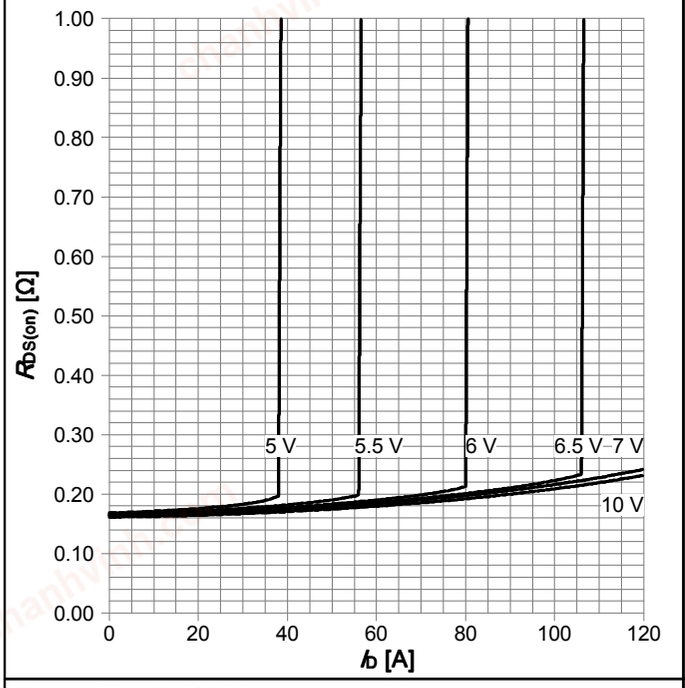	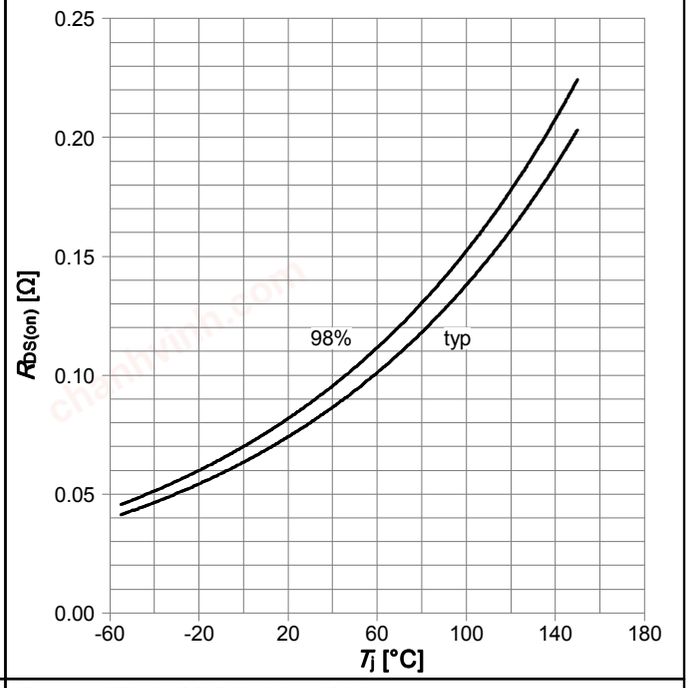
$R_{DS(on)}=f(I_D)$; $T_j=125$ °C; parameter: V_{GS}	$R_{DS(on)}=f(T_j)$; $I_D=32.6$ A; $V_{GS}=10$ V

chanhvinh.com

Table 12

Typ. transfer characteristics	Typ. gate charge
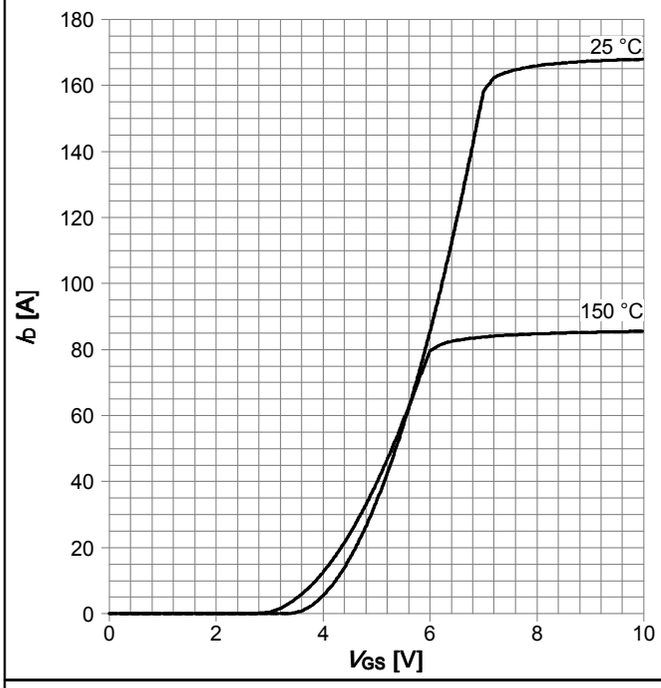	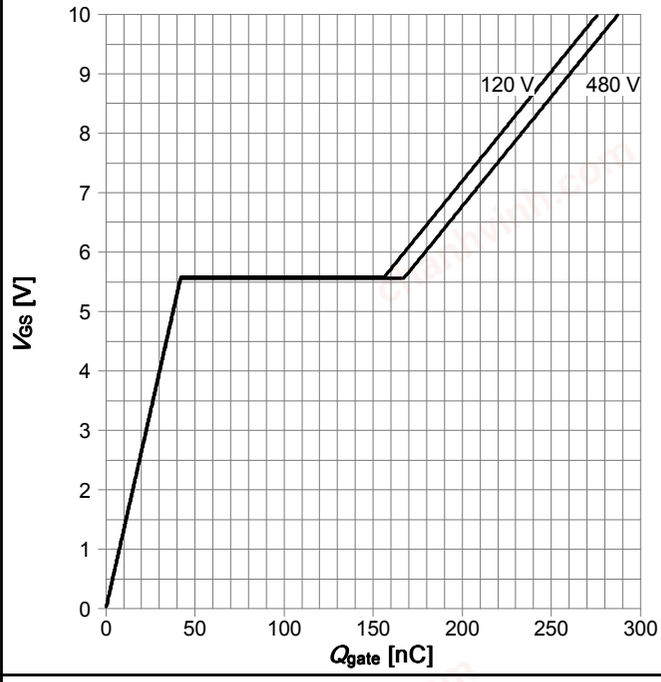
I_D=f(V_{GS}); |V_{DS}|=20V;	V_{GS}=f(Q_{gate}); I_D=54.9 A pulsed; parameter: V_{DD}

Table 13

Forward characteristics of reverse diode	Avalanche energy
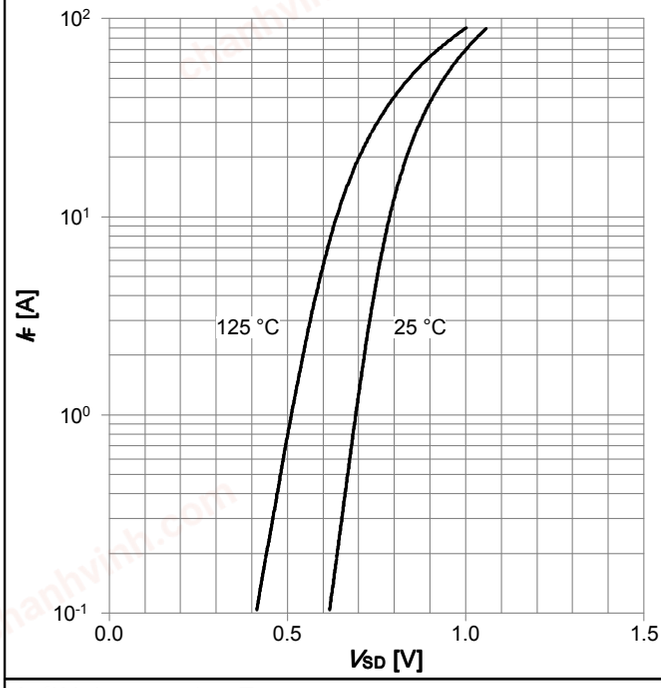	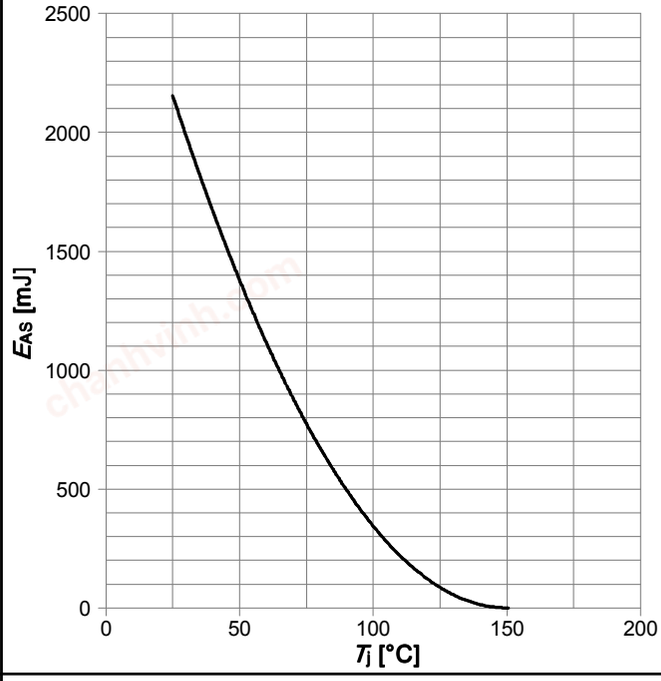
I_F=f(V_{SD}); parameter: T_j	E_{AS}=f(T_j); I_D=9.5 A; V_{DD}=50 V

chanhvinh.com

Table 14

Drain-source breakdown voltage	Typ. capacitances
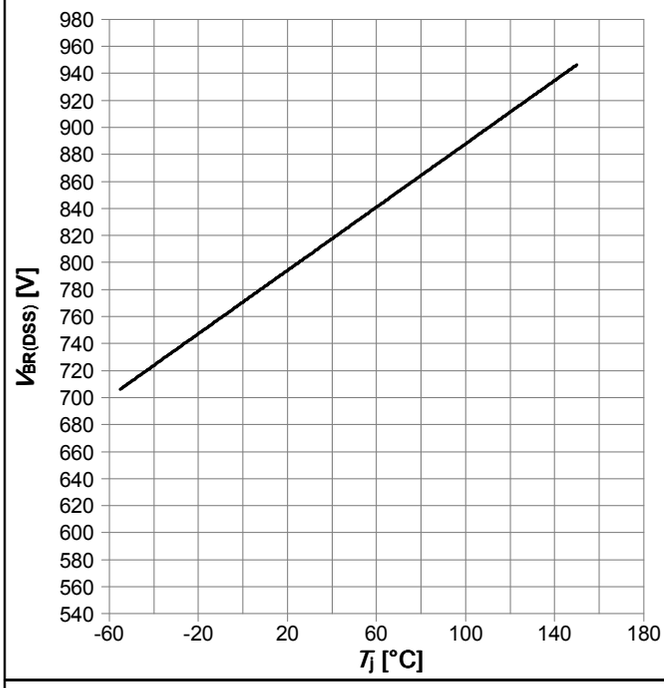	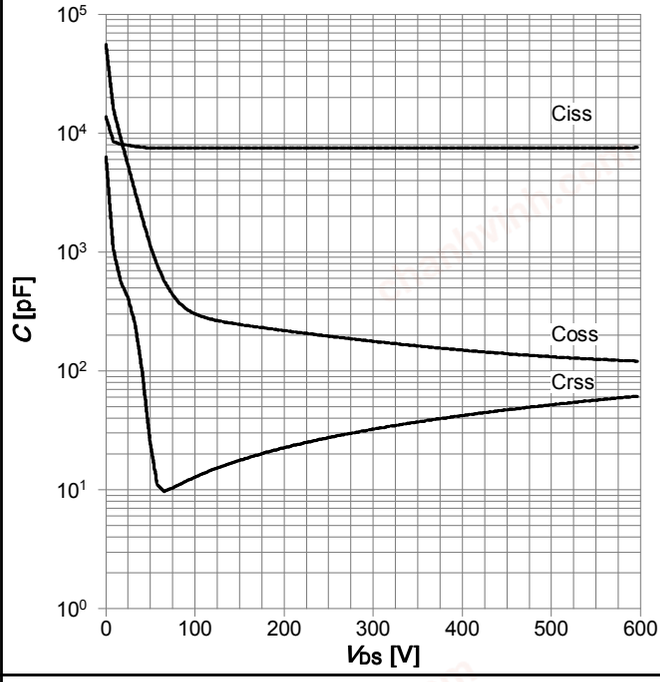
$V_{BR(DSS)}$=f(T_j); I_D=0.25 mA	C=f(V_{DS}); V_{GS}=0 V; f=1 MHz

Table 15

Typ. Coss stored energy
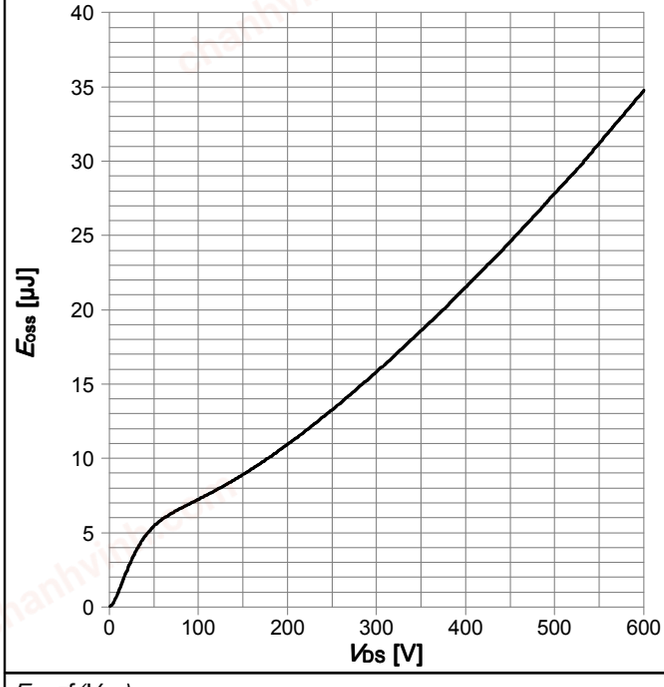
E_{oss}=f(V_{DS})

chanhvinh.com

6 Test Circuits

Table 16 Diode_characteristics

Test circuit for diode characteristics	Diode recovery waveform
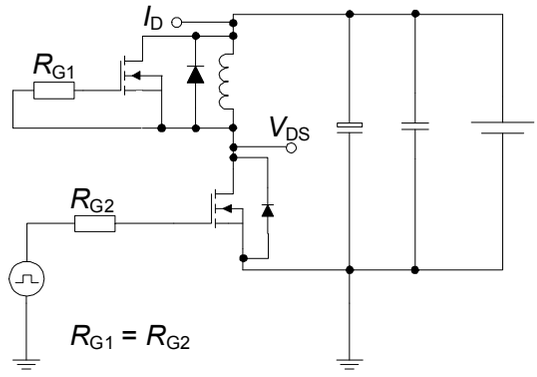	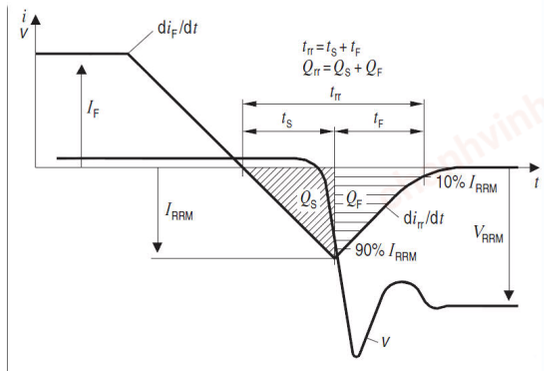

Table 17 Switching_times

Switching times test circuit for inductive load	Switching times waveform
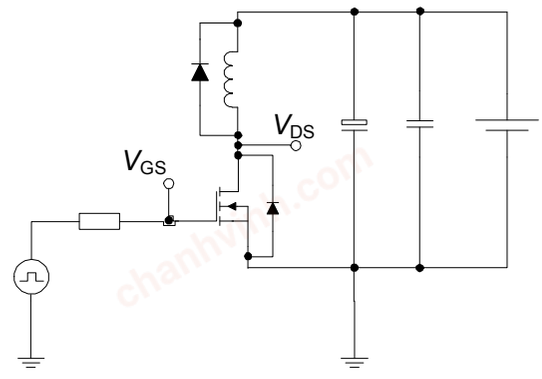	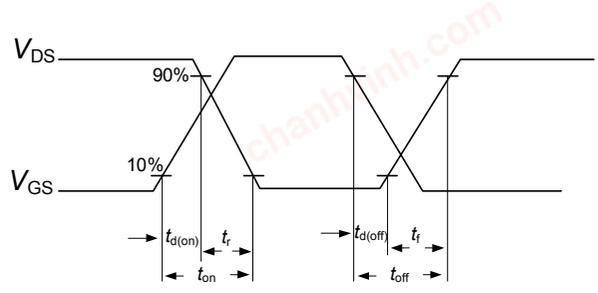

Table 18 Unclamped_inductive

Unclamped inductive load test circuit	Unclamped inductive waveform
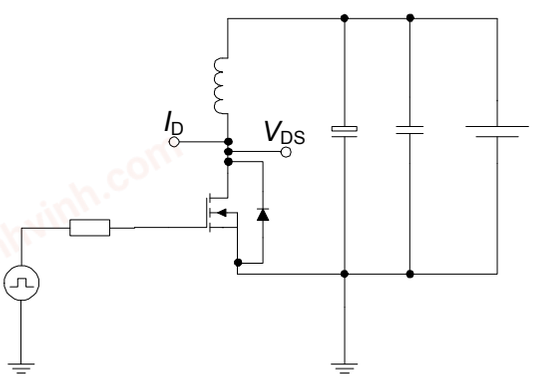	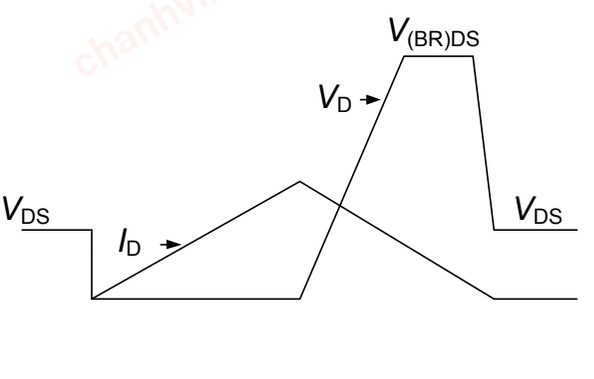

chanhvinh.com

7 Package Outlines

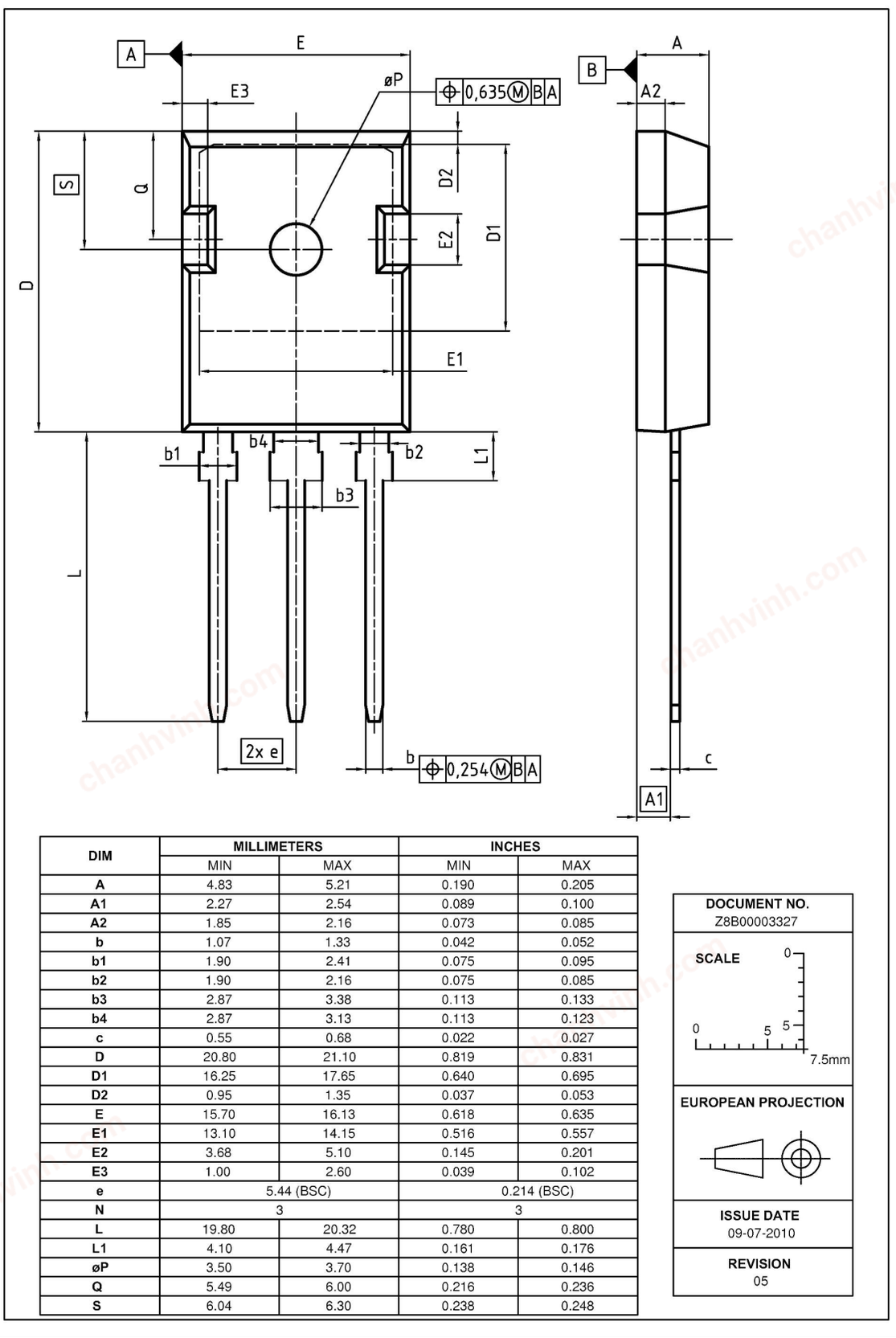

DIM	MILLIMETERS		INCHES	
	MIN	MAX	MIN	MAX
A	4.83	5.21	0.190	0.205
A1	2.27	2.54	0.089	0.100
A2	1.85	2.16	0.073	0.085
b	1.07	1.33	0.042	0.052
b1	1.90	2.41	0.075	0.095
b2	1.90	2.16	0.075	0.085
b3	2.87	3.38	0.113	0.133
b4	2.87	3.13	0.113	0.123
c	0.55	0.68	0.022	0.027
D	20.80	21.10	0.819	0.831
D1	16.25	17.65	0.640	0.695
D2	0.95	1.35	0.037	0.053
E	15.70	16.13	0.618	0.635
E1	13.10	14.15	0.516	0.557
E2	3.68	5.10	0.145	0.201
E3	1.00	2.60	0.039	0.102
e	5.44 (BSC)		0.214 (BSC)	
N	3		3	
L	19.80	20.32	0.780	0.800
L1	4.10	4.47	0.161	0.176
øP	3.50	3.70	0.138	0.146
Q	5.49	6.00	0.216	0.236
S	6.04	6.30	0.238	0.248

DOCUMENT NO.
Z8B00003327

SCALE
0 5 5 7.5mm

EUROPEAN PROJECTION

ISSUE DATE
09-07-2010

REVISION
05

Figure 1 Outline PG-TO 247, dimensions in mm/inches

chanhvinh.com

8 Appendix A

Table 19 Related Links

- **IFX CoolMOS Webpage:**
  http://www.infineon.com/cms/en/product/channel.html?channel=ff80808112ab681d0112ab6a628704d8
- **IFX Design Tools:**
  http://www.infineon.com/cms/en/product/promopages/designtools/index.html

chanhvinh.com

Revision History

SPW55N80C3

Revision: 2011-10-12, Rev. 2.2

Previous Revision

Revision	Date	Subjects (major changes since last revision)
2.0	2011-09-26	release of final datasheet

We Listen to Your Comments
Any information within this document that you feel is wrong, unclear or missing at all? Your feedback will help us to continuously improve the quality of this document. Please send your proposal (including a reference to this document) to:
erratum@infineon.com

Edition 2011-08-01
Published by
Infineon Technologies AG
81726 München, Germany
© 2011 Infineon Technologies AG
All Rights Reserved.

Legal Disclaimer
The information given in this document shall in no event be regarded as a guarantee of conditions or characteristics. With respect to any examples or hints given herein, any typical values stated herein and/or any information regarding the application of the device, Infineon Technologies hereby disclaims any and all warranties and liabilities of any kind, including without limitation, warranties of non-infringement of intellectual property rights of any third party.

Information
For further information on technology, delivery terms and conditions and prices please contact your nearest Infineon Technologies Office (**www.infineon.com**).

Warnings
Due to technical requirements, components may contain dangerous substances. For information on the types in question, please contact the nearest Infineon Technologies Office.
The Infineon Technologies component described in this Data Sheet may be used in life-support devices or systems and/or automotive, aviation and aerospace applications or systems only with the express written approval of Infineon Technologies, if a failure of such components can reasonably be expected to cause the failure of that life-support, automotive, aviation and aerospace device or system or to affect the safety or effectiveness of that device or system. Life support devices or systems are intended to be implanted in the human body or to support and/or maintain and sustain and/or protect human life. If they fail, it is reasonable to assume that the health of the user or other persons may be endangered.