chanhvinh.com

150 W LCC LED driver demonstration board with ICL5102HV

A 980 V combo PFC+ half-bridge resonant controller

Order code: REF-ICL5102HV-U150W

About this document

Scope and purpose

ICL5102HV is a superior 980 V integrated combo controller IC to control and drive the two-stage PFC + LLC/LCC topologies. These topologies are increasingly popular in LED lighting, battery chargers and other power supply applications at low or medium power levels. A High Voltage (HV) 150 W, 3 A PFC + LCC dimmable LED driver has been designed to demonstrate the performance of ICL5102HV. The output stage of the LCC converter is equipped with Synchronous Rectification (SR) for better efficiency.

This document briefly introduces the feature set of ICL5102HV and then reports on the performance of this HV demonstration board across its wide operating range.

Intended audience

This document is intended for anyone who uses this ICL5102HV demonstration board, either for their own application tests or as a reference for a new ICL5102HV-based development.

Table of contents

About this document **1**
Table of contents **1**
1 IC introduction **3**
1.1 Features 3
1.2 Protection mechanisms with auto-restart reaction 3
2 Board description **4**
2.1 Electrical specifications 4
2.2 Schematics and layout 5
2.3 Board set-up 9
3 Electrical performance **10**
3.1 Efficiency, power factor and THD 11
3.2 PFC performance 13
3.2.1 Start-up 13
3.2.2 Steady-state 14
3.3 LCC performance 16
3.3.1 Start-up 16
3.3.2 Steady-state 17
3.4 Response to load step 17
4 Thermal performance **18**

chanhvinh.com

Table of contents

5 EMI 19
6 Magnetic components 20
7 Bill of Materials (BOM) 26
8 Reference 29
Revision history 30

chanhvinh.com

1 IC introduction

ICL5102HV is the HV version of ICL5102. Its integrated HV half-bridge driver can handle 900 V (recommended value) thanks to Infineon's coreless transformer technology, which also exhibits supreme robustness against dV/dt and negative voltage peak. Sealed in a PG-DSO-19-1 package Figure 1, ICL5102HV has its pin-16 left open for sufficient clearance distance. The features of ICL5102HV are summarized as follows.

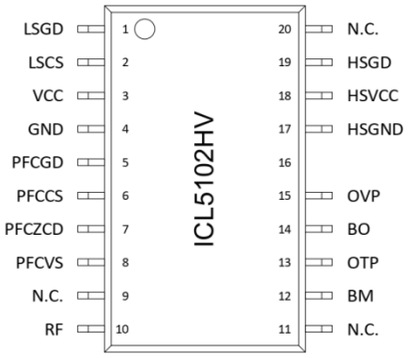

Figure 1 ICL5102HV pin map (PG-DSO-19-1 package)

1.1 Features

- 900 V (recommended value) integrated high-side MOSFET driver
- Integrated two-stage combo controller allows for a reduced number of external components, and optimizes the Bill of Materials (BOM) and form factor
- PFC controller with Critical Conduction Mode (CrCM) and Discontinuous Conduction Mode (DCM)
- Resonant Half-Bridge (HB) controller with fixed or variable switching frequency control
- Maximum 500 KHz HB switching frequency and soft-start frequency up to 1.3 MHz
- Resonant HB Burst Mode (BM) ensures power limitation and low standby power at less than 300 mW
- Supports universal AC input voltage (90 to 480 V_{rms}) nominal
- Excellent system efficiency up to 94 percent
- THD optimization ensures low harmonic distortion down to 30 percent nominal load

1.2 Protection mechanisms with auto-restart reaction

- Input brown-out protection
- PFC bus Over-Voltage Protection (OVP)
- PFC Over-Current Protection (OCP)
- Output OVP, OCP/short-circuit protection, Output Over-Power (OPP)/over-load protection
- Capacitive mode protection
- External Over-Temperature Protection (OTP)

chanhvinh.com

2 Board description

This 150 W demonstration board is developed for industrial lighting applications with line-to-line input voltage (277 V_{rms} ~ 528 V AC). The system architecture of this design is given in Figure 2.

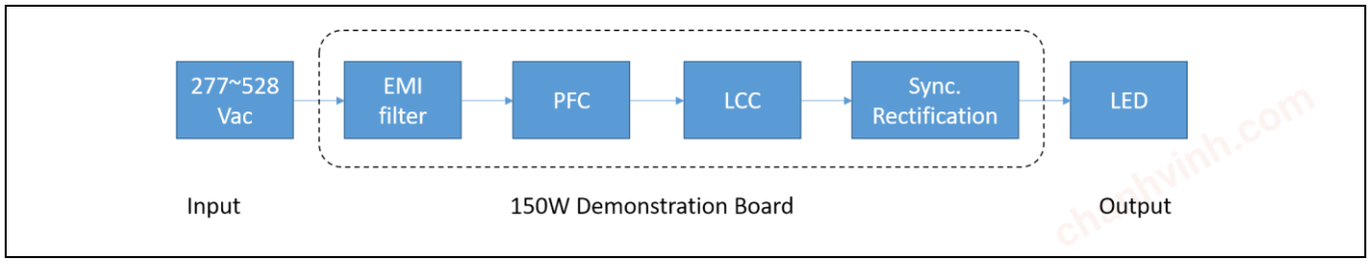

Figure 2 System architecture

Key features of this demonstration board are:

- Boost PFC + LCC topology for wide output voltage range
- 800 V bus voltage to cover 528 V_{rms} maximum input voltage
- Single-side PCB (70 µm/2 oz copper thickness) for cost savings
- Galvanically isolated 0 to 10 V analog dimming
- SR at LCC output for better efficiency (based on IR11688S)
- Current transformer used to pass the LCC transformer output current information to its primary side (faster control response)

Note that ICL5102HV, like ICL5102, has BM operation; however, this mode is not used for the light load operation in this demonstration.

2.1 Electrical specifications

Table 1 lists the key electrical specifications of this demonstration board.

Table 1 Key electrical specifications

Item	Symbol	Min.	Typ.	Max.	Unit	Remarks
AC input voltage	$V_{in.ac}$	277	380 to 480	528	V_{rms}	
Input frequency	f_{in}	47		63	Hz	
Inrush current	$I_{in.pk}$			35	A_{pk}	
Total Harmonic Distortion	THD			10 percent	–	50 percent load, 380 V_{rms}
				15 percent	–	50 percent load, 480 V_{rms}
Efficiency	η	92 percent			–	100 percent load at 380 V_{rms} and 480 V_{rms}
Rated LED voltage	V_{LED}	17		48	V DC	
Full LED current	$I_{LED.full}$	2.97		3.03	A	V_{dim} = 10 V
LCC frequency range	f_{LCC}	40		130	kHz	

chanhvinh.com

Line regulation	$\Delta I_{out.line}$			±1	Percent	Current regulation
Load regulation	$\Delta V_{out.Load}$			±1	Percent	I_{LED} = 1 to 100 percent
EMI	EN 55015					
Harmonics	EN 61000-3-2 class C					

2.2 Schematics and layout

Figure 3-Figure 5 illustrate the schematics and layout of this board. On the top side of this single-side PCB are through-hole components only. The copper thickness is 70 µm (2 oz).

chanhvinh.com

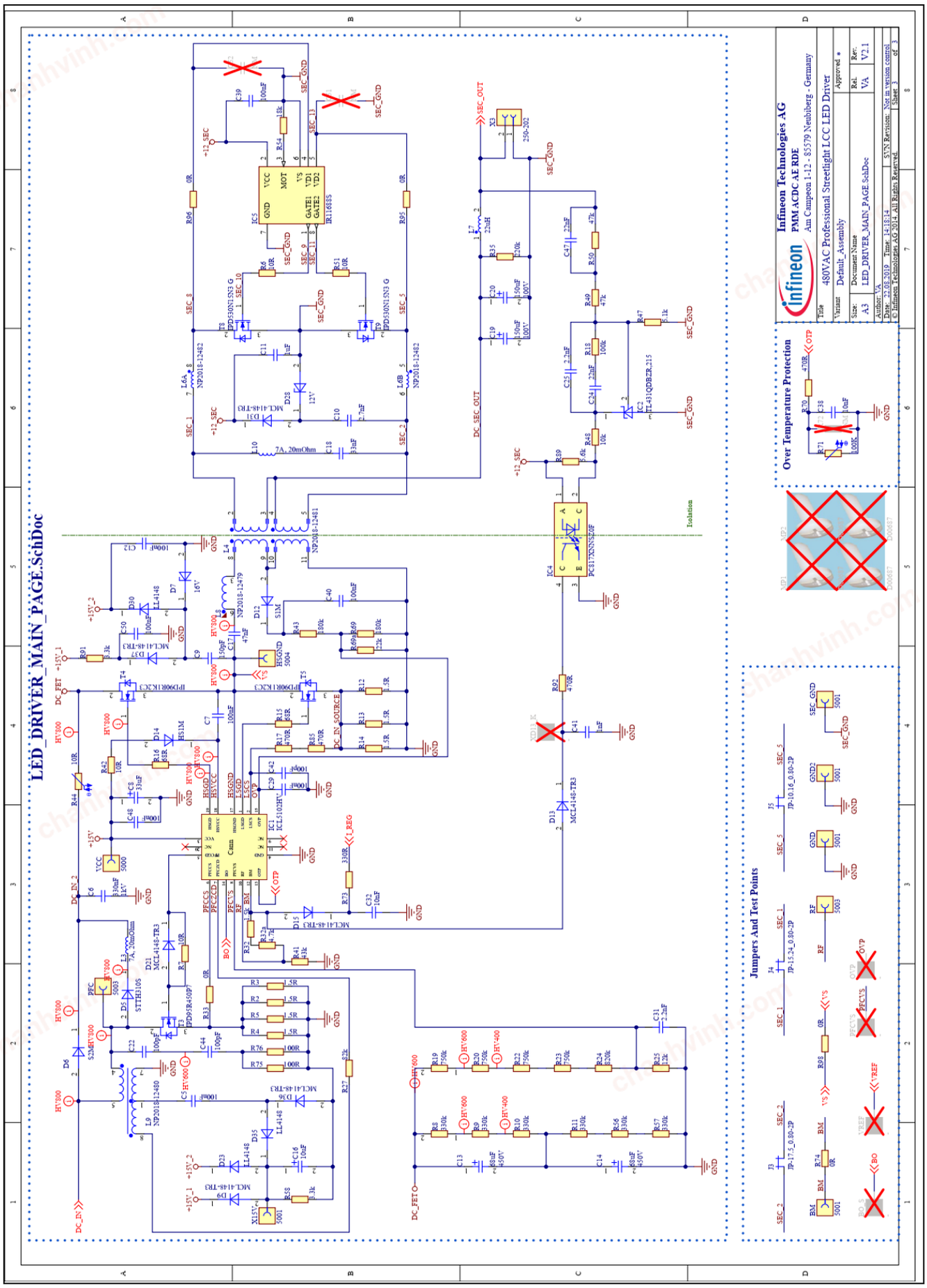

Figure 3 Schematics – power stage

chanhvinh.com

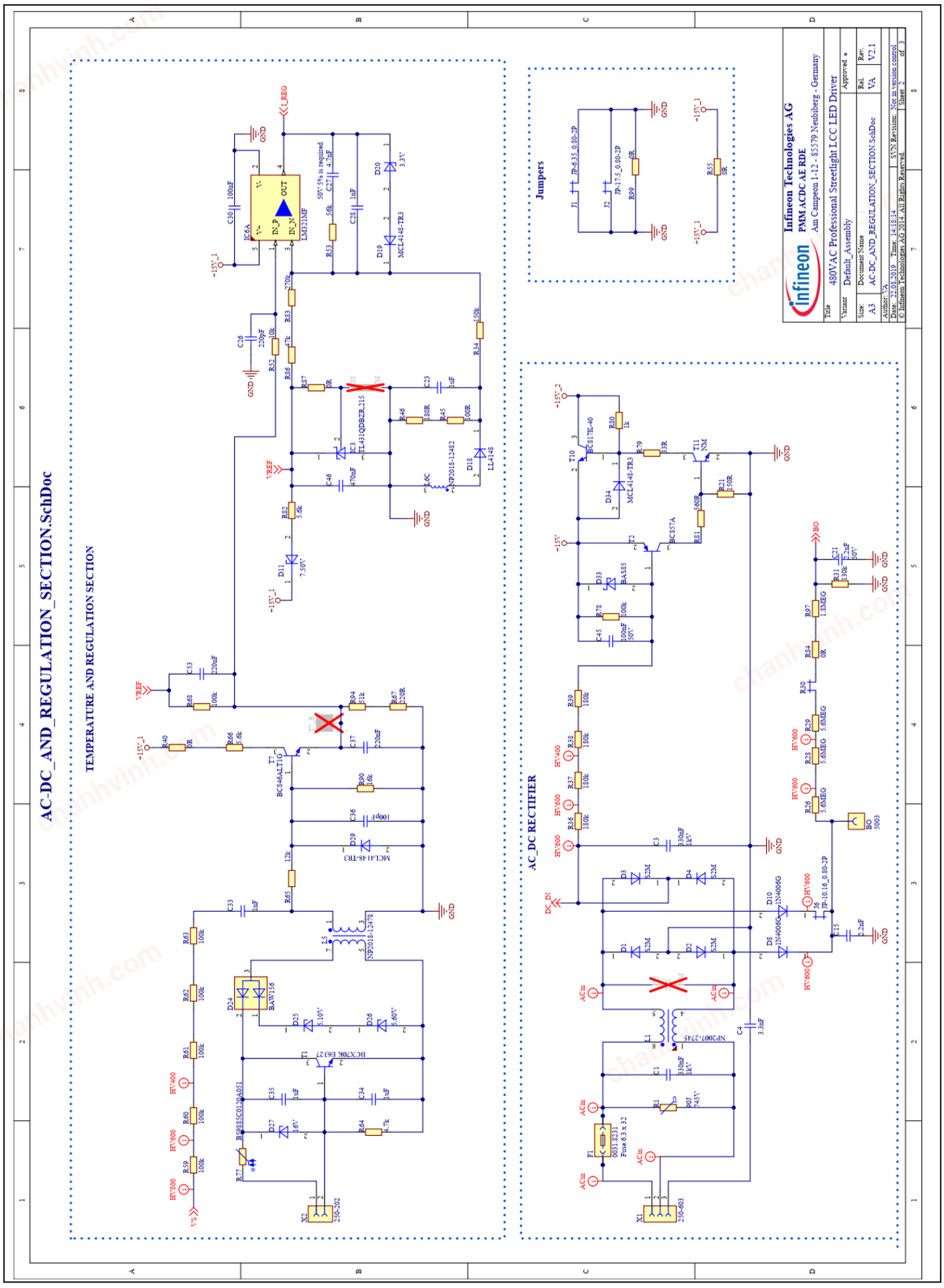

Figure 4 Schematics – *supply, control and dimming circuit*

chanhvinh.com

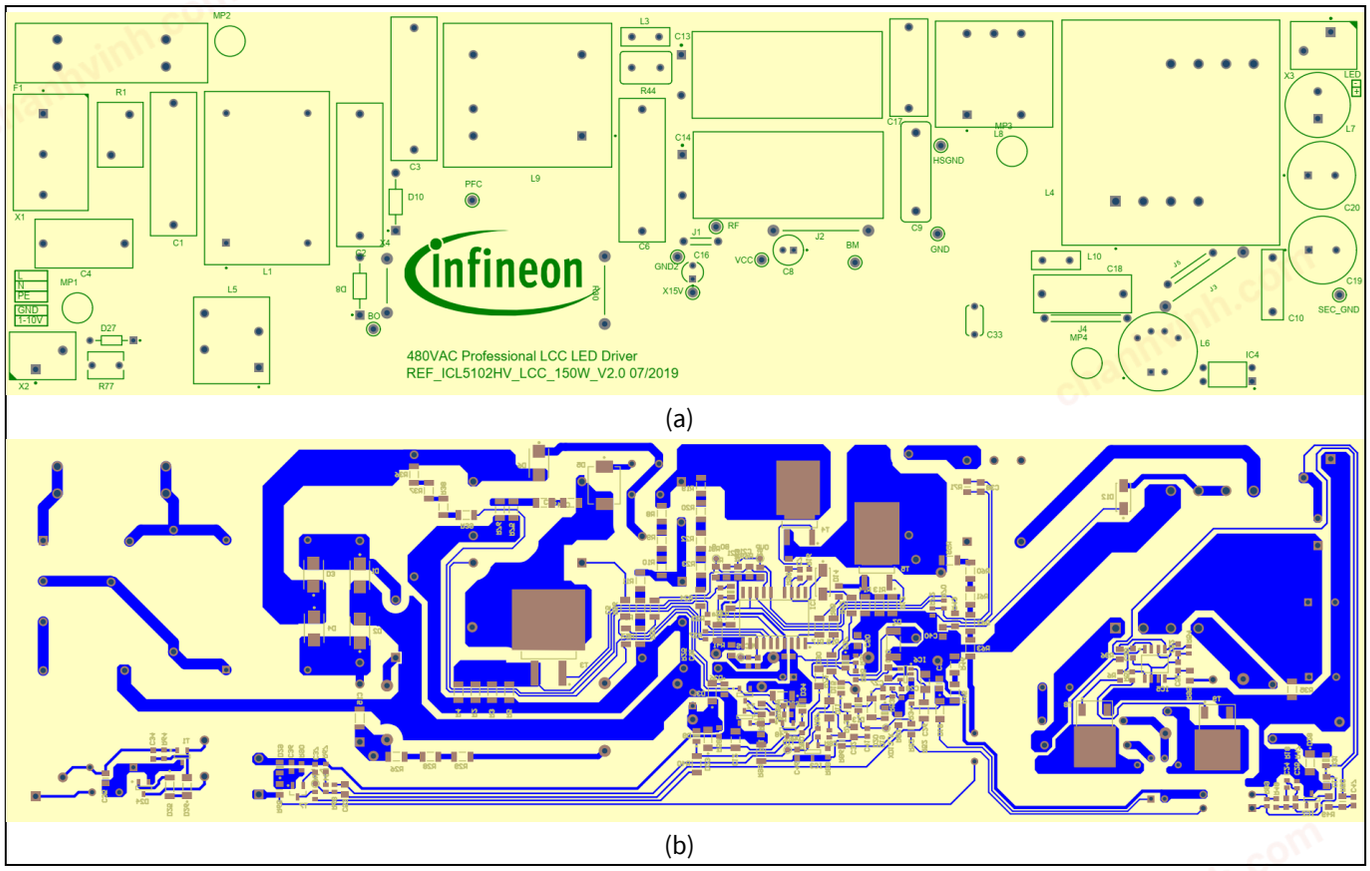

Figure 5 Board layout – (a) top side and (b) bottom side

chanhvinh.com

2.3 Board set-up

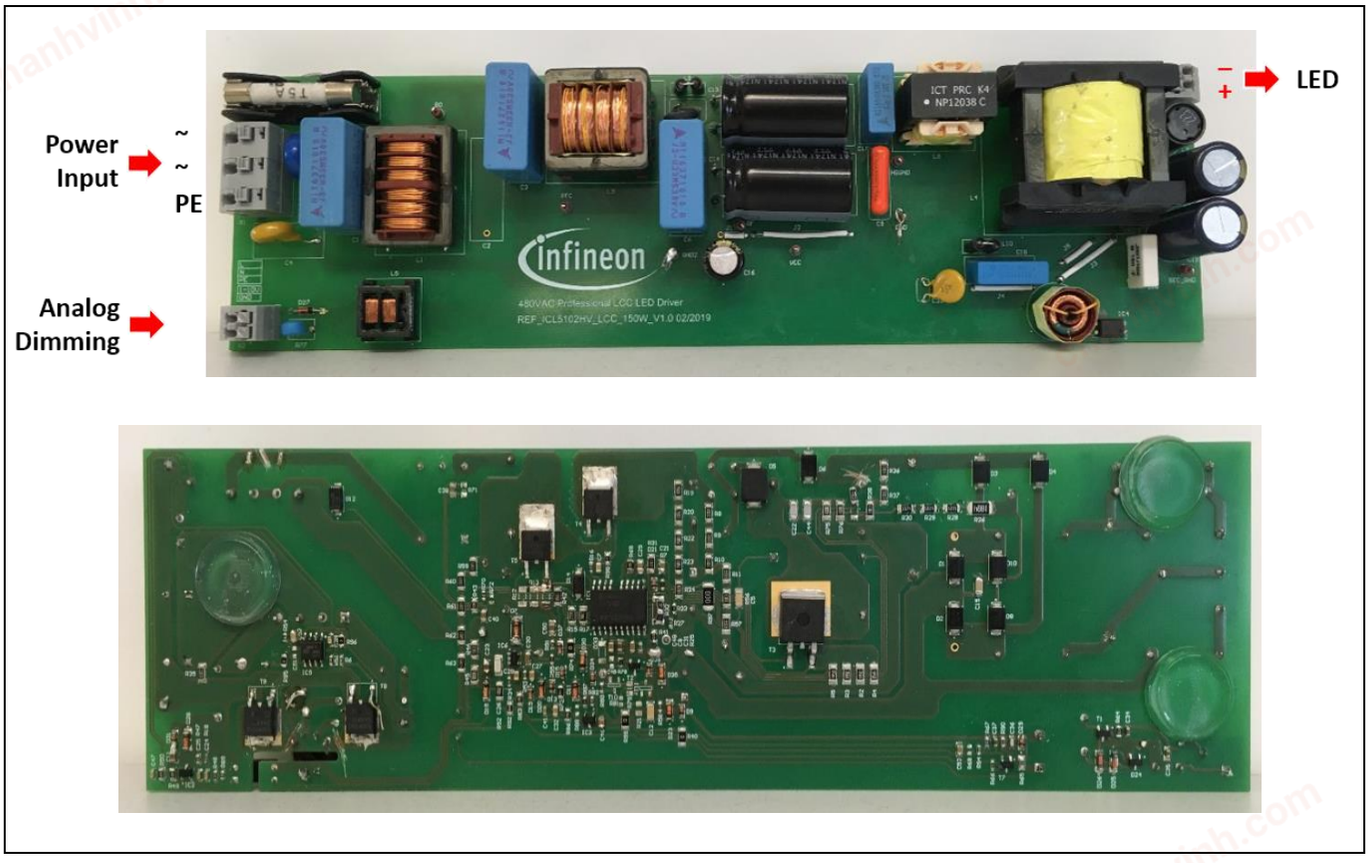

Figure 6 Board set-up

chanhvinh.com

3 Electrical performance

The demonstration board is designed to be a dimmable window LED driver. The LED operating window is shown in Figure 7. The LED voltage and current range from 48 to 17 V and 3 A to 30 mA (100 ~ 1 percent), respectively.

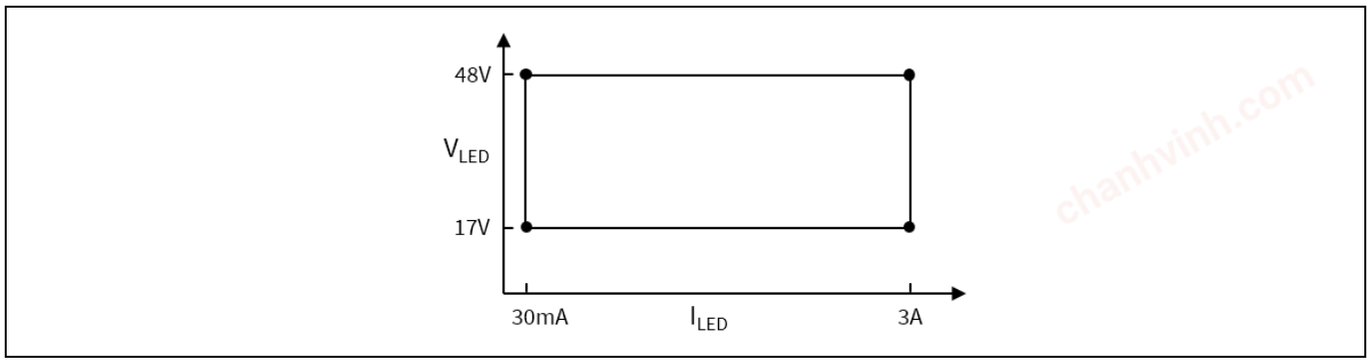

Figure 7 Output operating window

This LED current is tuned via a galvanically isolated 0 to 10 V dimming circuit. This circuit is illustrated in Figure 8. The dimming curve is given in Figure 9.

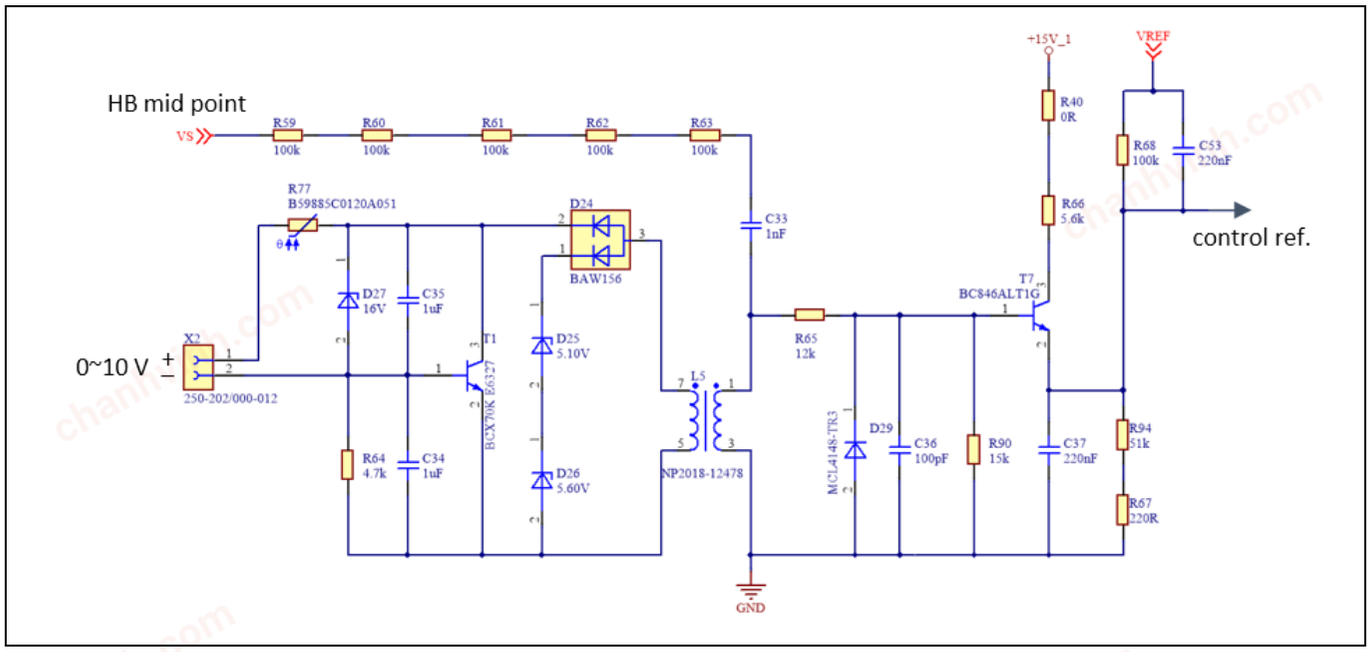

Figure 8 Galvanically isolated 1 to 10 V dimming circuit

chanhvinh.com

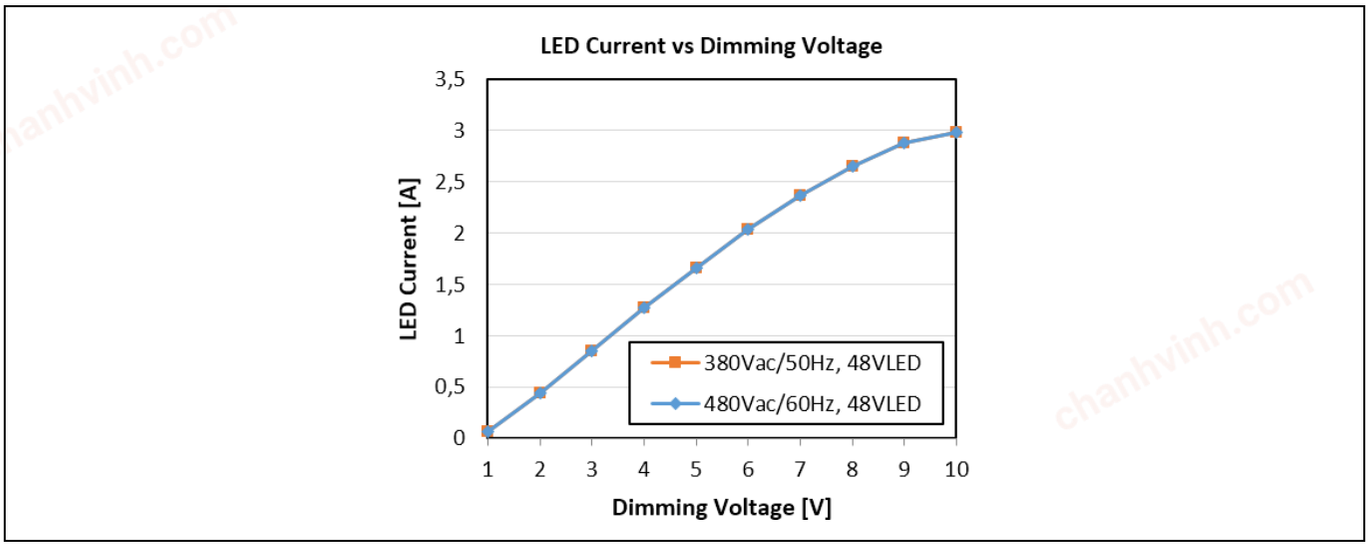

Figure 9 Dimming curve

The electrical performance of this demonstration board is shown on the system level (efficiency, power factor and THD), PFC part and LCC part. The start-up behavior, load regulation and steady-state are demonstrated both for the PFC stage and the LCC stage.

3.1 Efficiency, power factor and THD

The efficiency, power factor and THD are presented below in a range of input voltage and load conditions. First, the system efficiency is presented in Figure 10 at 380 V_{rms} and 480 V_{rms} at full load range. At the maximum LED current, the system efficiency is 92.2 percent.

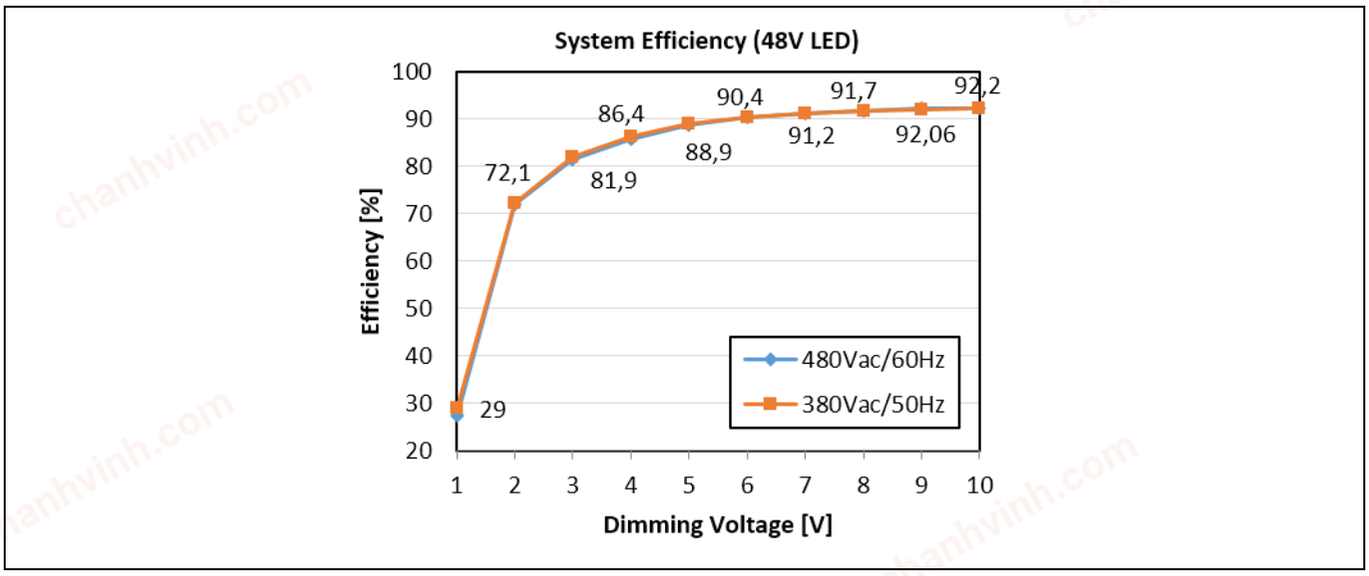

Figure 10 System efficiency

ICL5102 and ICL5102HV have dedicated internal circuits for THD minimization, which makes THD the best-in-class. They operate the PFC with two modes: CrCM at medium and high load, and DCM at light load. The on-time of the PFC MOSFET in these two modes is controlled to minimize the THD and harmonics.

In the specified wide input voltage range, the power factor and THD are optimized for the 380 V_{rms}/50 Hz input. At this condition, the power factor can be kept above 0.88 and the THD below 12 percent when the LED current is higher than 30 percent of full load (Figure 11 and Figure 12).

chanhvinh.com

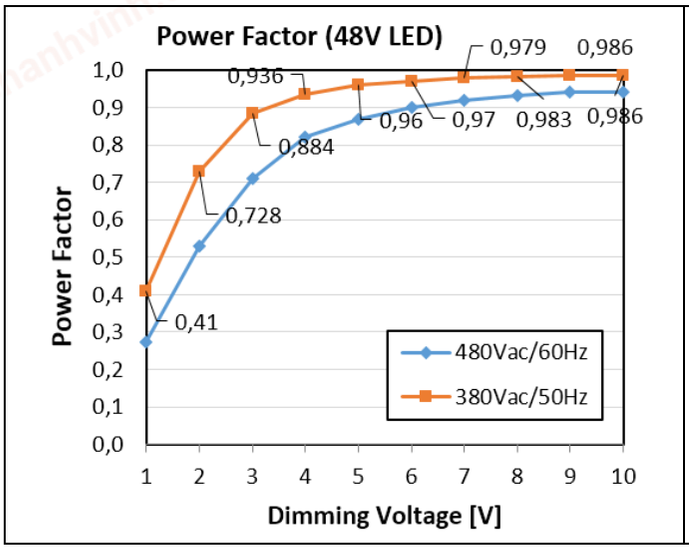

Figure 11 Power factor in full load range

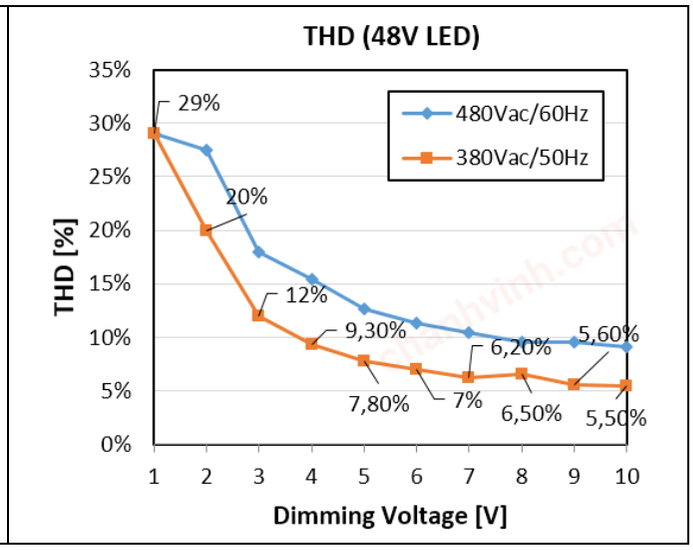

Figure 12 THD in full load range

The input current harmonics spectrum at full load and half load is shown in Figure 13. It can be seen that the harmonics comply with IEC 61000-3-2:2019 class C.

chanhvinh.com

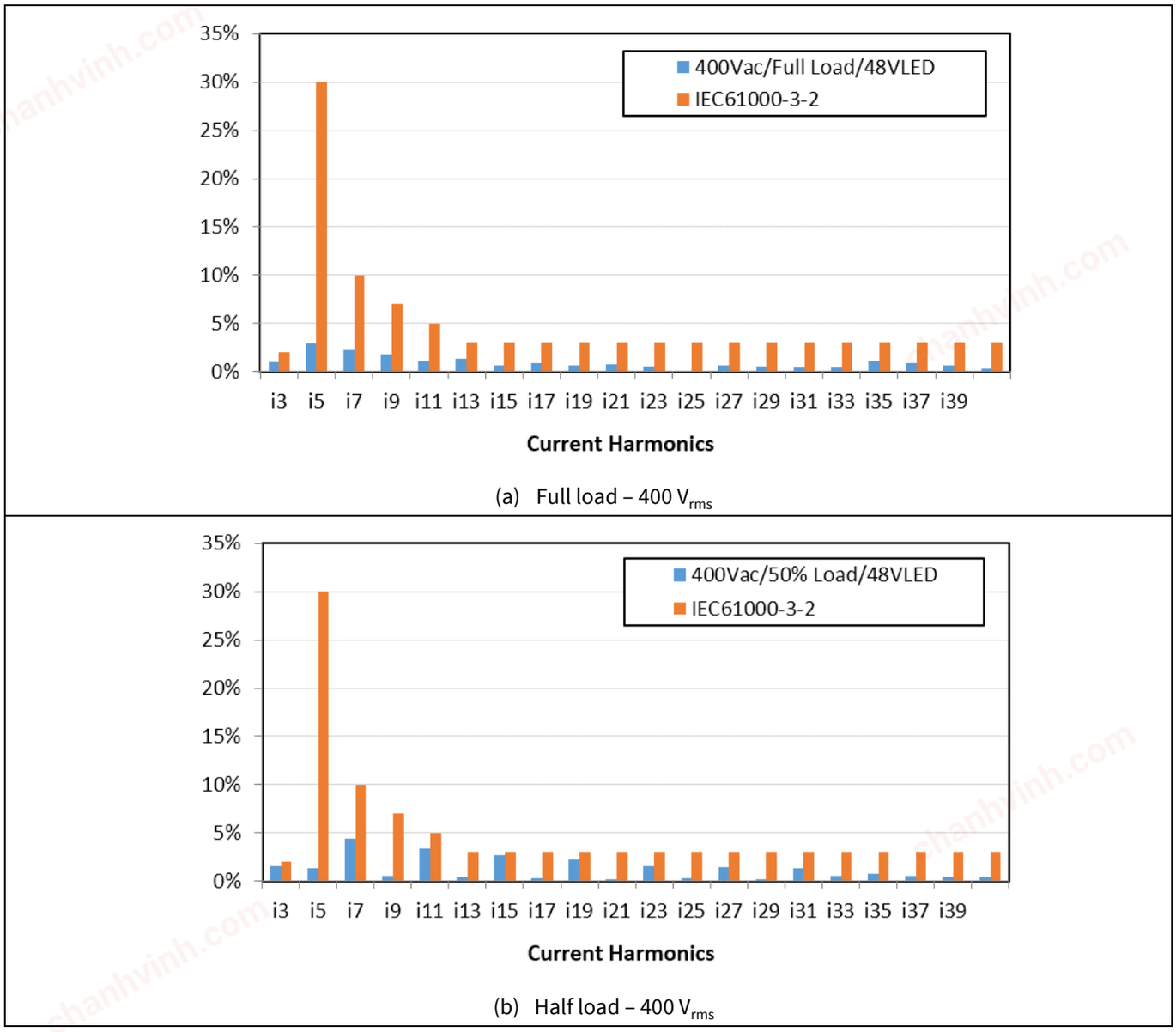

Figure 13 **Input current harmonics at 400 V_{rms} at (a) full load and (b) half load compared with IEC61000-3-2 class C**

3.2 PFC performance

The start-up and steady-state performance of the PFC are shown below.

3.2.1 Start-up

ICL5102HV starts to work once the V_{CC} pin is higher than 16 V and stops when it is lower than 9 V. This design utilizes pull-up resistors to raise the V_{CC} voltage at start-up. This is a cost-effective solution when the input voltage range is narrow or the time-to-light is not critical. However, for applications with wide input voltage, a HV start-up circuit is proposed in [1], which is efficient and speeds up start-up.

The waveforms of the start-up process at minimum and maximum input voltage are given in Figure 14.

chanhvinh.com

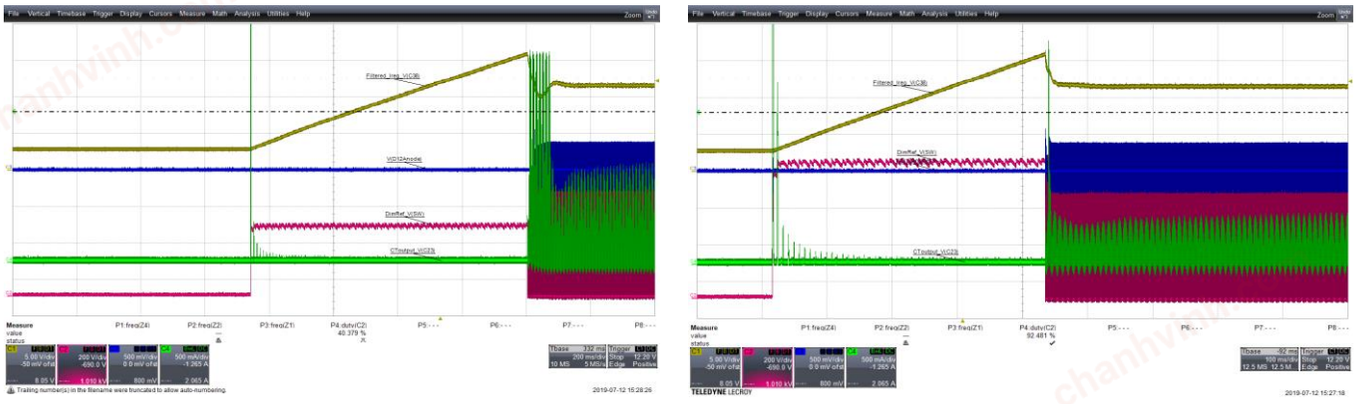

(a) (b)

CH1 (yellow): V_{CC} voltage, **CH2** (pink): bus voltage, **CH3** (blue): LCC LSCS pin voltage, **CH4** (green): PFC inductor current.

Figure 14 Start-up process at 277 V_{rms} (a) and 528 V_{rms} (b) with full load (48 V LED, 3 A)

After start-up, the on-time of the PFC MOSFET increases gradually until the bus voltage reaches 75 percent of its reference value. Then, the internal control loop dominates the bus control. The initial on-time depends on the BO pin 14 voltage; in other words, it is mains voltage dependent. This is to ensure the PFC power is constant at start-up despite varying input voltage.

Figure 15 illustrates this start-up process at 380 V_{rms}. In the process of gradual on-time increase, the boost inductor current will be limited by IC threshold and Current Sensing (CS) resistors between the PFCCS pin and ground.

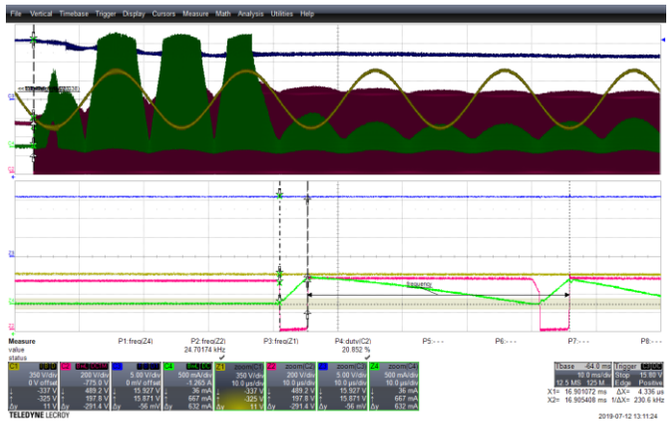

CH1 (yellow): V_{CC} voltage, **CH2** (pink): bus voltage, **CH3** (blue): LCC LSCS pin voltage, **CH4** (green): PFC inductor current.

Figure 15 Start-up process at 380 V_{rms} with full load (48 V LED, 3 A)

3.2.2 Steady-state

The PFC and LCC waveforms in the steady-state at 277 V_{rms}, 380 V_{rms}, 480 V_{rms} and 528 V_{rms} are shown in Figure 16-Figure 19, where CH1 (yellow) is the mid-point voltage of the LCC HB, CH2 (pink) is the drain-source voltage of the PFC MOSFET (V_{DS}), CH3 (blue) is the voltage of the LCC CS resistor (pin LSCS) and CH4 (green) is the PFC inductor current.

chanhvinh.com

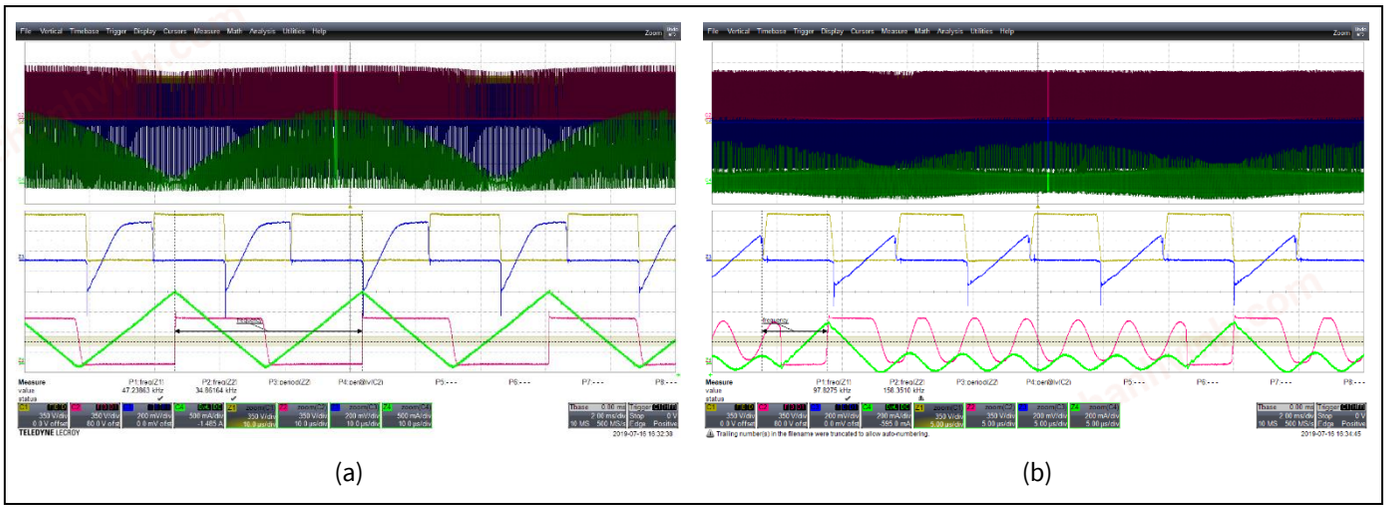

(a) (b)

Figure 16 Waveforms of PFC and LCC at 277 V_{rms} at V_{dim} = 10 V (a) and V_{dim} = 1 V (b) with 48 V LED

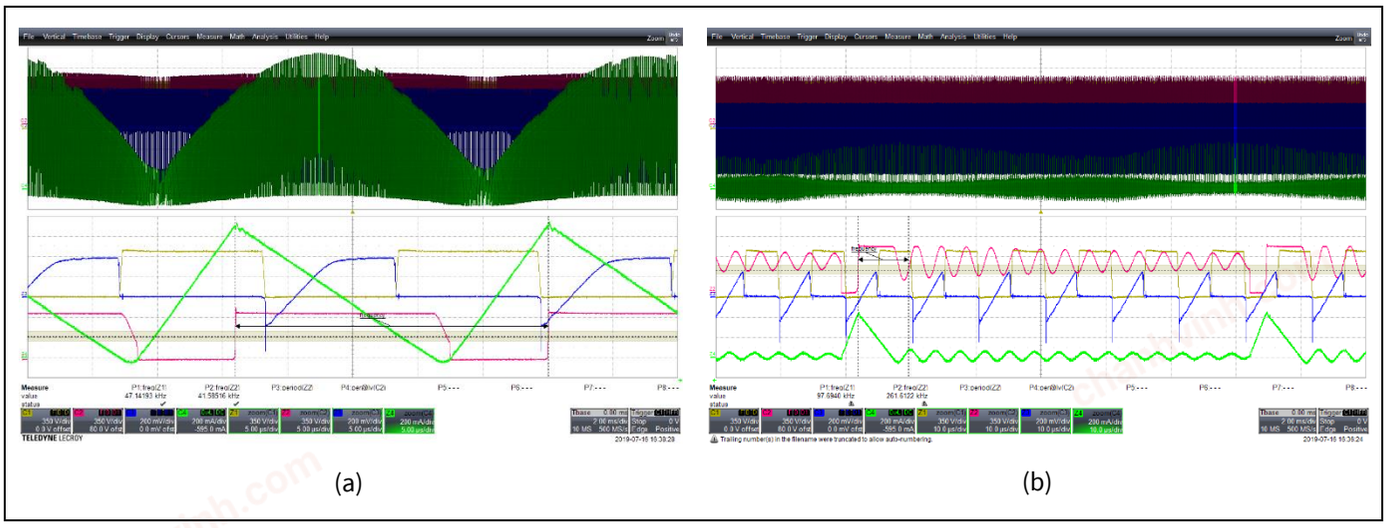

(a) (b)

Figure 17 Waveforms of PFC and LCC at 380 V_{rms} at V_{dim} = 10 V (a) and V_{dim} = 1 V (b) with 48 V LED

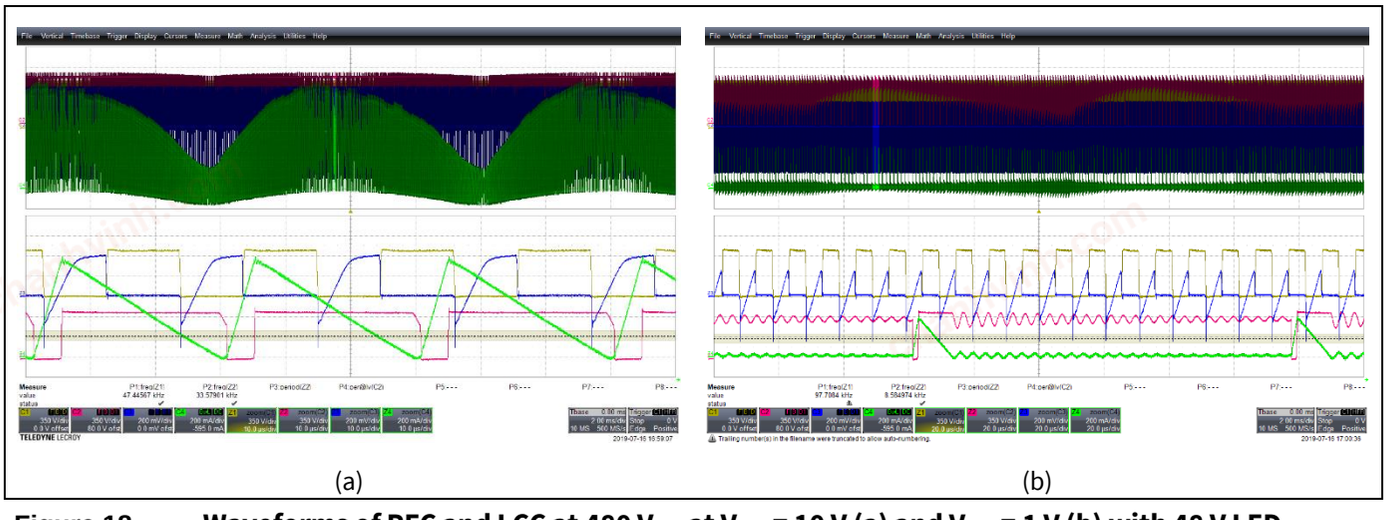

(a) (b)

Figure 18 Waveforms of PFC and LCC at 480 V_{rms} at V_{dim} = 10 V (a) and V_{dim} = 1 V (b) with 48 V LED

chanhvinh.com

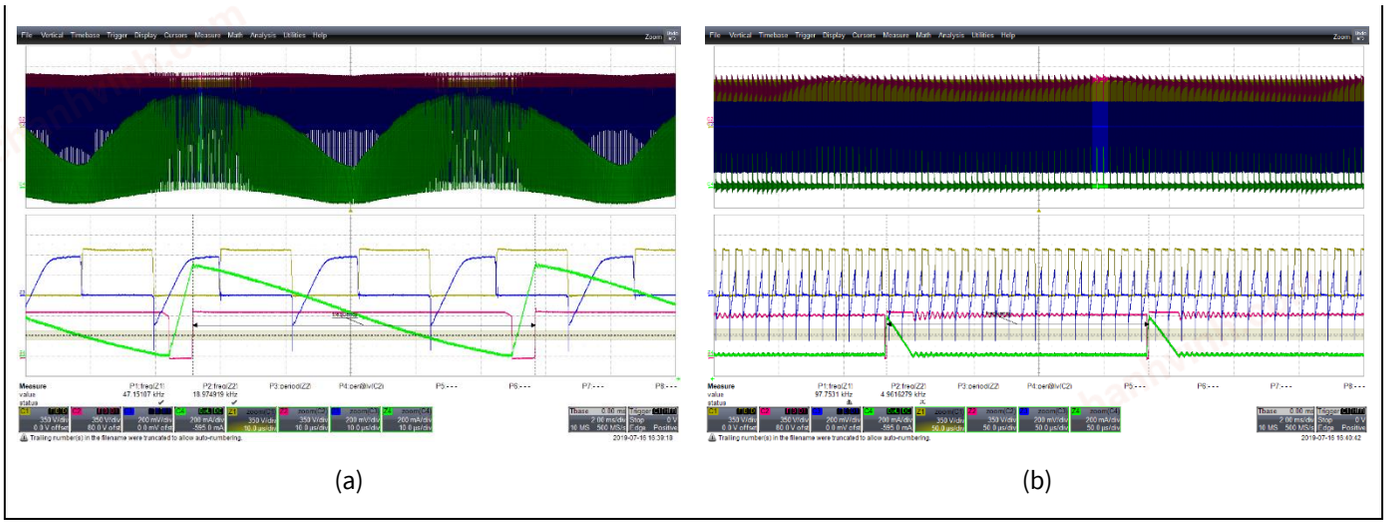

(a) (b)

Figure 19 Waveforms of PFC and LCC at 528 V_{rms} at V_{dim} = 10 V (a) and V_{dim}

3.3 LCC performance

3.3.1 Start-up

As for ICL5102, ICL5102HV is equipped with the same soft-start mechanism for the HB stage. Figure 20 shows the start-up behavior of the LCC stage.

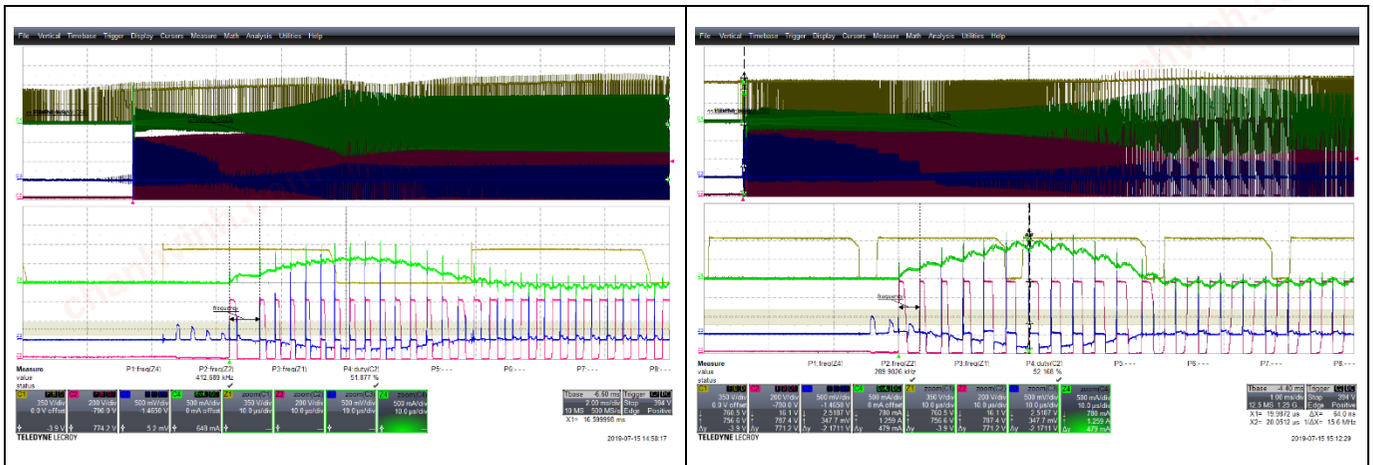

(a) (b)

CH1 (yellow): PFC MOSFET V_{DS}, **CH2** (pink): half-bridge mid-point voltage, **CH3** (blue): LCC LSCS pin voltage, **CH4** (green): LCC resonant inductor current.

Figure 20 LCC start-up behavior at 380 V_{rms} (a) and 528 V_{rms} (b) with full load (48 V, 3 A)

chanhvinh.com

3.3.2 Steady-state

The steady-state waveforms of the LCC stage can be found in Figure 16-Figure 19. The sweep frequency is designed in the range of 45 to 130 kHz.

3.4 Response to load step

The responses to the large load step are recorded in Figure 21. It can be seen that the the LED current changes swiftly and without ringing, and the bus voltage is far from triggering the bus OVP.

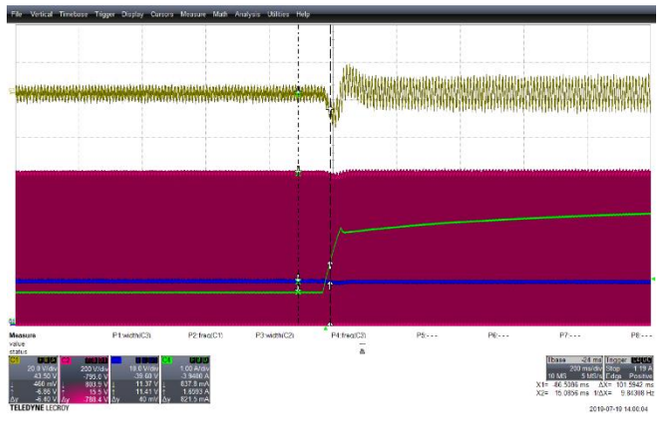

(a)

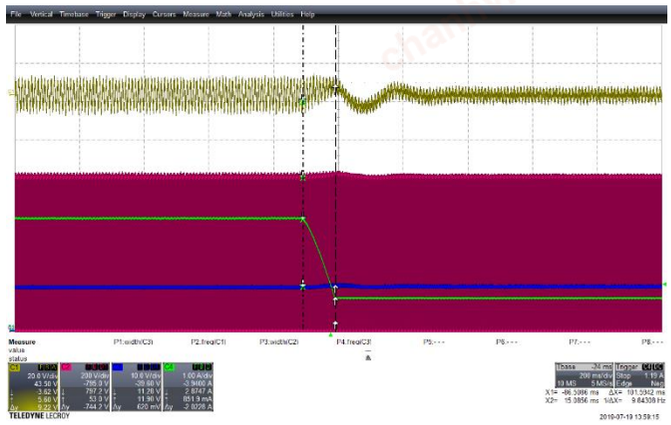

(b)

CH1 (yellow): bus voltage (AC coupled), **CH2** (pink): HB mid-point voltage, **CH3** (blue): V_{CC} voltage, **CH4** (green): LED current.

Figure 21 Load step (a) from 1 to 3 A (b) from 3 to 1 A

chanhvinh.com

4 Thermal performance

The temperature profile of the board is given below, measured at 380 V AC/50 Hz input with 48 V LED at full load (3 A), in the 23°C ambient in free air. The maximum temperature (81°C) appears at the resonant inductor of the LCC converter.

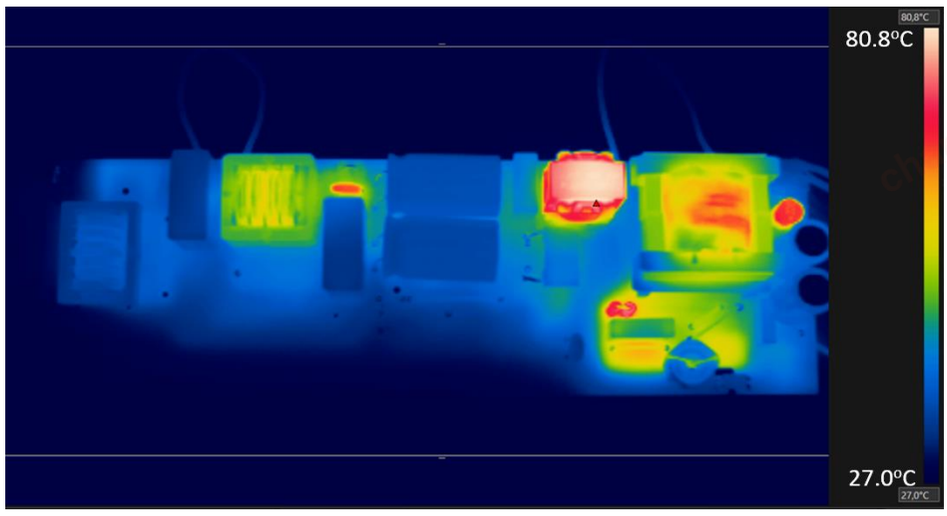

(a)

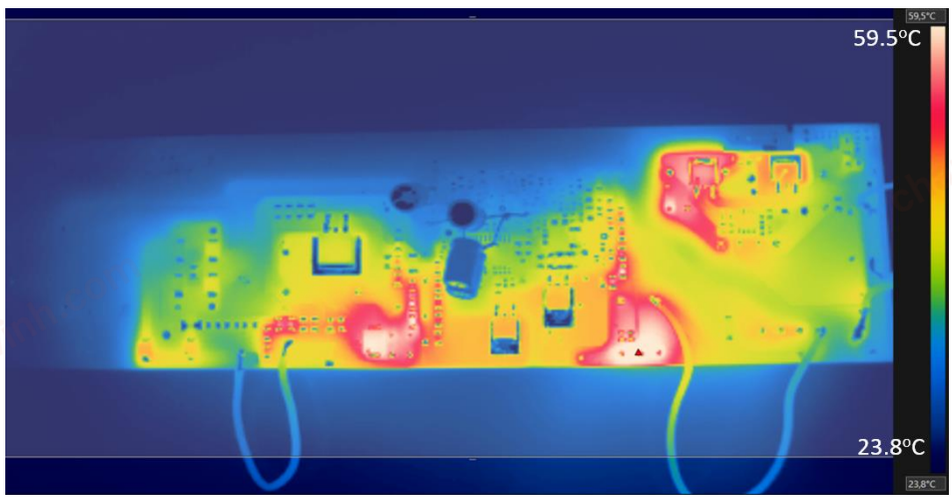

(b)

Figure 22 Temperature profile of the board at 380 V_{rms} input, 48 V LED with 3 A load (a) top side and (b) bottom side

chanhvinh.com

5 EMI



Figure 23 EMI spectrum at 250 V/50 Hz at full load (48 V LED, 3 A)

chanhvinh.com

6 Magnetic components

chanhvinh.com

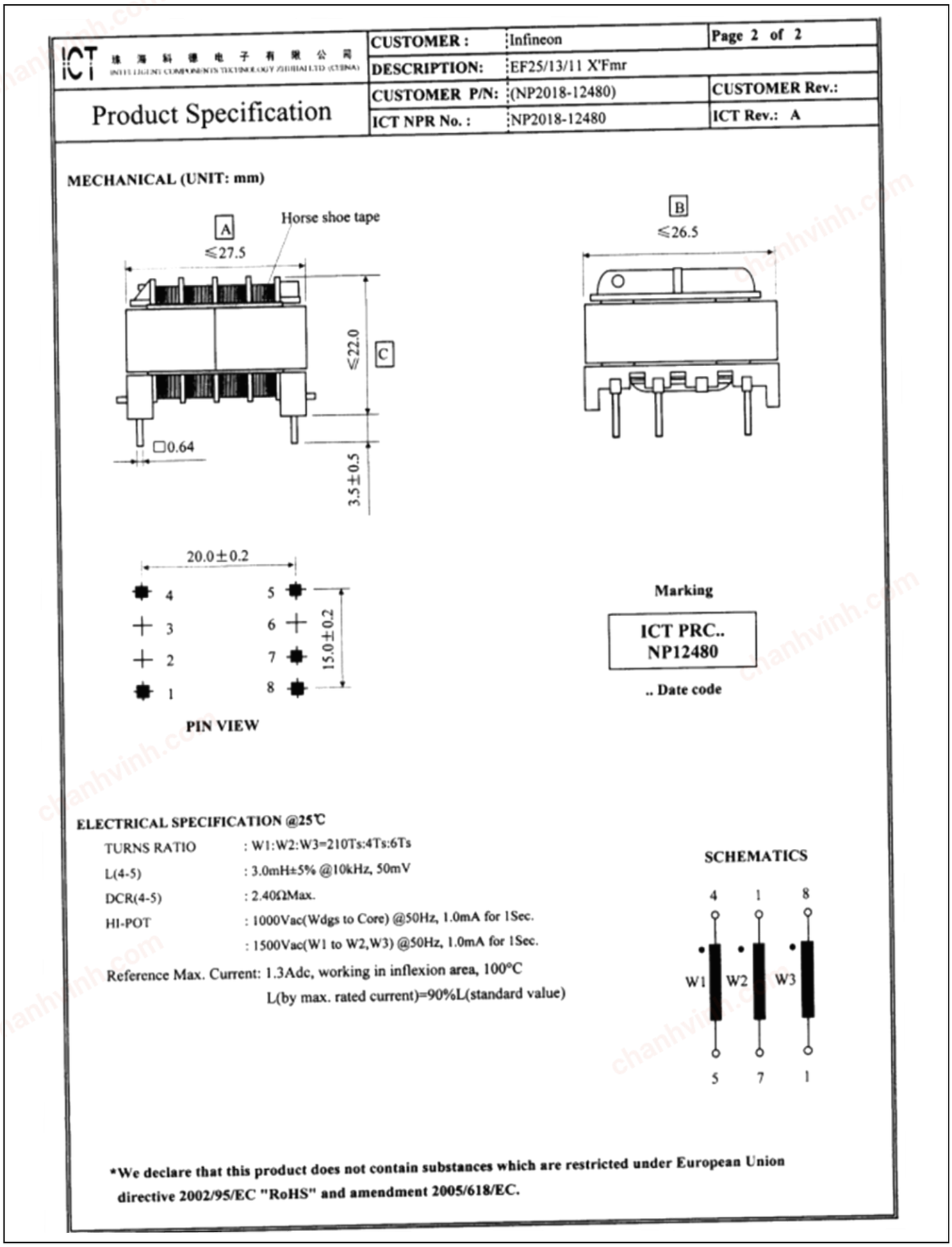

ICT 珠海科德电子有限公司 INTELLIGENT COMPONENTS TECHNOLOGY ZHUHAI LTD (CHINA)	CUSTOMER :	Infineon	Page 2 of 2
	DESCRIPTION:	EF25/13/11 X'Fmr	
Product Specification	CUSTOMER P/N:	(NP2018-12480)	CUSTOMER Rev.:
	ICT NPR No. :	NP2018-12480	ICT Rev.: A

MECHANICAL (UNIT: mm)

Marking

ICT PRC..
NP12480

.. Date code

ELECTRICAL SPECIFICATION @25℃

TURNS RATIO	: W1:W2:W3=210Ts:4Ts:6Ts
L(4-5)	: 3.0mH±5% @10kHz, 50mV
DCR(4-5)	: 2.40ΩMax.
HI-POT	: 1000Vac(Wdgs to Core) @50Hz, 1.0mA for 1Sec.
	: 1500Vac(W1 to W2,W3) @50Hz, 1.0mA for 1Sec.

Reference Max. Current: 1.3Adc, working in inflexion area, 100°C
L(by max. rated current)=90%L(standard value)

SCHEMATICS

*We declare that this product does not contain substances which are restricted under European Union directive 2002/95/EC "RoHS" and amendment 2005/618/EC.

Figure 24 Boost inductor (L9)

chanhvinh.com

ICT 珠海科德电子有限公司 INTELLIGENT COMPONENTS TECHNOLOGY ZHUHAI LTD.(CHINA)	CUSTOMER :	Infineon	Page 2 of 2
	DESCRIPTION:	EF12.6 X'Fmr	
Product Specification	CUSTOMER P/N :	(NP2018-12478)	CUSTOMER Rev.:
	ICT NPR No. :	NP2018-12478	ICT Rev.: A

MECHANICAL (UNIT: mm)

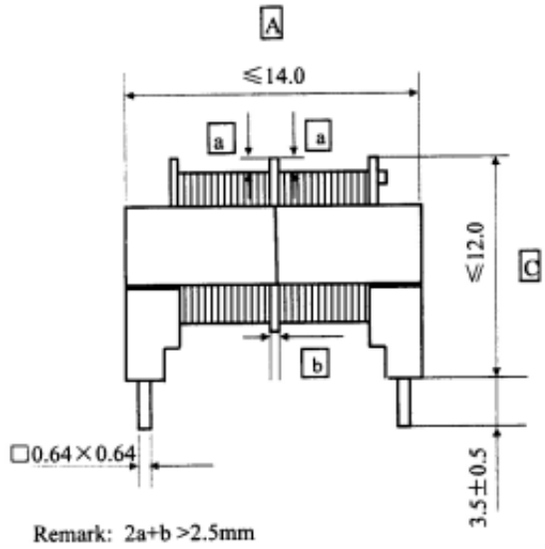

Remark: 2a+b >2.5mm

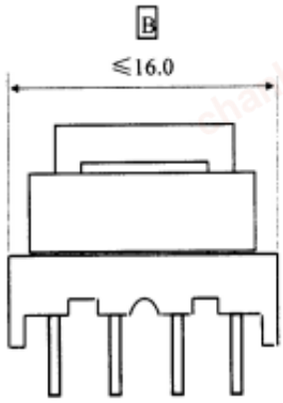

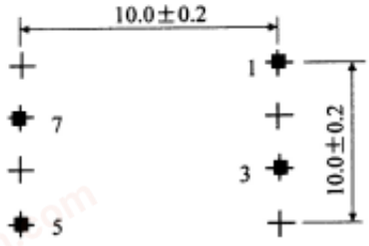

PIN VIEW

Marking

ICT PRC..
NP12478

..Date code

ELECTRICAL SPECIFICATION @25℃

TURNS	: W1=W2=100Ts
L(1-3)(7-5)	: 22.0mH±30%@10KHz, 50mV
DCR(1-3)(7-5)	: 4.0Ω Max.
HI-POT	: 1500VAC (W1 to W2) @50Hz, 2Sec.
	: 1000VAC (Wdgs to Core) @50Hz, 2Sec.

SCHEMATICS

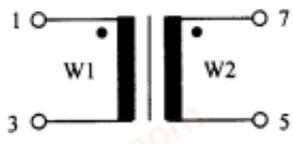

*We declare that this product does not contain substances which are restricted under European Union directive 2002/95/EC "RoHS" and amendment 2005/618/EC.

Figure 25 Transformer in the dimming circuit (L5)

chanhvinh.com

ICT	CUSTOMER :	Infineon	Page 2 of 2
	DESCRIPTION:	EF20/9/11 X'Fmr	
Product Specification	CUSTOMER P/N :	(NP2018-12479)	CUSTOMER Rev.:
	ICT NPR No. :	NP2018-12479	ICT Rev.: A

MECHANICAL (UNIT: mm)

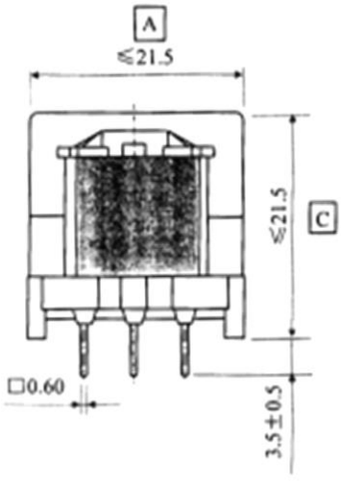

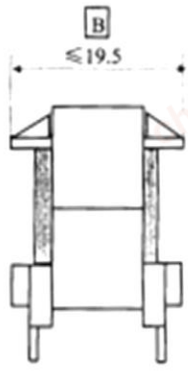

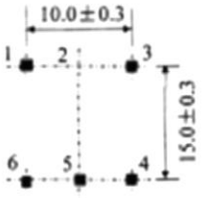

PIN VIEW

Marking

ICT PRC..
NP12479
.. Date code

ELECTRICAL SPECIFICATION @25℃

TURNS	: W1=120Ts
L(6-3)	: 2.5mH±5% @10kHz, 50mV
DCR(6-3)	: 1.25Ω max.
HI-POT	: 1500Vac(W1 to Core) @50Hz, 1.0mA for 1Sec.

Reference Max. Current: 0.75Adc, working in inflexion area, 100°C
L(by max. rated current)≥90%L(standard value)

SCHEMATICS



*We declare that this product does not contain substances which are restricted under European Union directive 2002/95/EC "RoHS" and amendment 2005/618/EC.

Figure 26 LCC resonant inductor (L8)

chanhvinh.com

ICT 珠海科德电子有限公司 INTELLIGENT COMPONENTS TECHNOLOGY ZHUHAI LTD (CHINA)	CUSTOMER :	Infineon	Page 2 of 2
	DESCRIPTION:	ETD34/17/11 X'Fmr	
Product Specification	CUSTOMER P/N :	(NP2018-12481)	CUSTOMER Rev.:
	ICT NPR No. :	NP2018-12481	ICT Rev.: A

MECHANICAL (UNIT: mm)

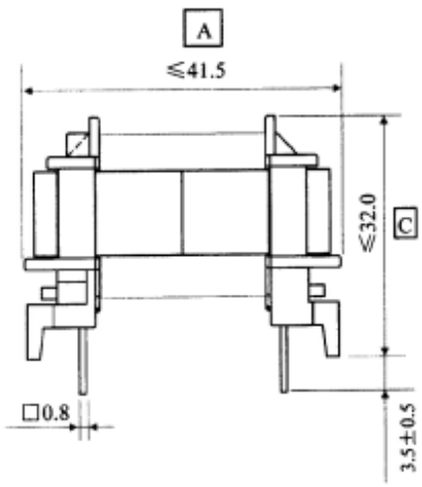

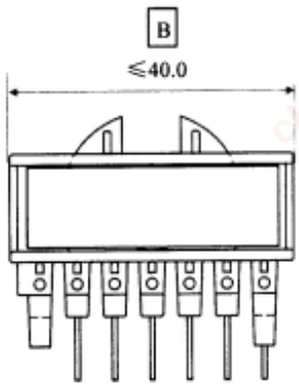

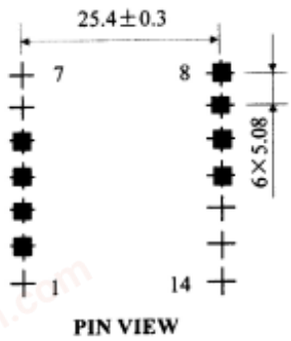

PIN VIEW

Marking

ICT PRC..
NP12481

..Date code

ELECTRICAL SPECIFICATION @25℃

TURNS RATIO	: W1:W2:W3:W4=150Ts:10Ts:21Ts:21Ts
L(8-9)	: 60mH±30% @10kHz, 50mV
L_L(8-9)	: 170μH Max. @10kHz, 50mV,shorted W2,W3,W4
DCR(8-9)	: 1.5ΩMax.
HI-POT	: 1000Vac(Wdgs to Core) @50Hz, 1.0mA for 1Sec.
	: 1000Vac(W1 to W2) @50Hz, 1.0mA for 1Sec.
	: 4500Vac(W1,W2 to W3,W4) @50Hz, 1.0mA for 1Sec.

SCHEMATICS

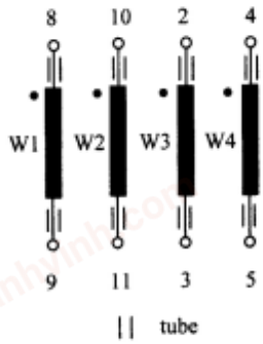

***We declare that this product does not contain substances which are restricted under European Union directive 2002/95/EC "RoHS" and amendment 2005/618/EC.**

Figure 27 LCC transformer (L4)

chanhvinh.com

珠海科德电子有限公司
INTELLIGENT COMPONENTS TECHNOLOGY ZHUHAI LTD. (CHINA)

Product Specification	CUSTOMER :	Infineon	Page 2 of 2
	DESCRIPTION:	R10 Transformer	
	CUSTOMER P/N :	(NP2018-12482)	CUSTOMER Rev.:
	ICT NPR No. :	NP2018-12482	ICT Rev.: A

MECHANICAL (UNIT: mm)

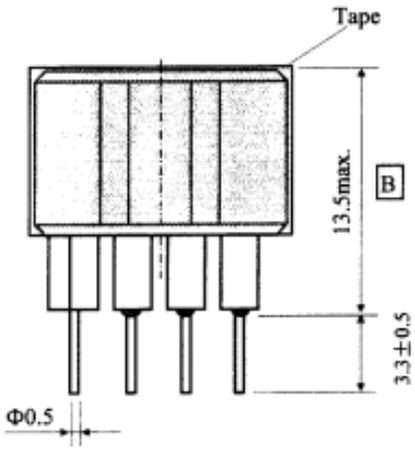

Marking

ICT PRC..
NP12482

..Date code

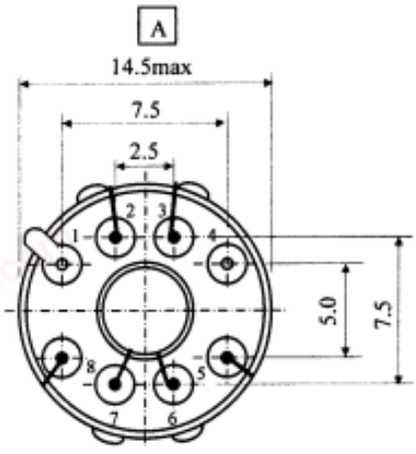

PIN VIEW

SCHEMATICS

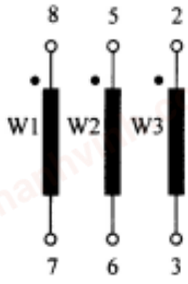

ELECTRICAL SPECIFICATION @25℃

TURNS RATIO	: W1:W2:W3=1T:1T:150Ts
L(2-3)	: 38mH Min@10KHz, 50mV
DCR(2-3)	: 3.0Ω max.
HI-POT	: 1500Vrms (W1,W2 to W3) @50Hz,1mA for 1sec.

***We declare that this product does not contain substances which are restricted under European Union directive 2002/95/EC "RoHS" and amendment 2005/618/EC.**

Figure 28 Current transformer (L6)

chanhvinh.com

7 Bill of Materials (BOM)

Part number	Quantity	Designator	Description
1	5	BM, GND, GND2, SEC_GND, X15V	Con 5001/ / CON-THT-TP-5001/ /
2	3	BO, PFC, RF	Con 5003/ / CON-THT-TP-5003/ /
3	3	C1, C3, C6	Cap 330nF/ 1kV/ THT/ /20%
4	1	C4	Cap 3.3nF/ 2kV/ CAP-THT-FKP4_15P-9x16x18/ /10%
5	1	C5	Cap 100nF/ 50V/ CAPC3216X95N/ X7R/5%
6	4	C7, C39, C45, C48	Cap 100nF/ 50V/ 0603/ X7R/10%
7	1	C8	Cap 33uF/ 35V/ Radial Type/ /20%
8	1	C9	Cap 150pF/ 2kV/ Radial/ /-10%
9	1	C10	Cap 2.7nF/ 1kV/ Radial/ MKT/5%
10	3	C11, C23, C35	Cap 1uF/ 50V/ 0805 (2012M)/ X7R/10%
11	1	C12	Cap 100nF/ 250V/ 1206/ X7R/10%
12	2	C13, C14	Cap 68uF/ 450V/ CAPPRD750W80D1625H3700B/ /20%
13	1	C15	Cap 2.2nF/ 1kV/ CAPC3216X125N/ X7R/10%
14	1	C16	Cap 10uF/ 25V/ Radial Type/ /20%
15	1	C17	Cap 47nF/ 1kV/ Radial Type/ /10%
16	1	C18	Cap 33nF/ 1kV/ THT/ /5%
17	2	C19, C20	Cap 150uF/ 100V/ RADIAL/ /20%
18	1	C21	Cap 2.2nF/ 50V/ CAPC2013X70N/ X7R/5%
19	2	C22, C44	Cap 100pF/ 2kV/ 1206/ C0G/10%
20	2	C24, C47	Cap 22nF/ 50V/ 0603/ X7R/10%
21	1	C25	Cap 2.2nF/ 100V/ 0603 (1608)/ C0G/5%
22	1	C26	Cap 220pF/ 50V/ CAPC3216X95N/ X7R/10%
23	1	C27	Cap 4.7nF/ 16V/ 0603/ X7R/10%
24	2	C28, C41	Cap 1nF/ 50V/ 0603/ X7R/10%
25	4	C29, C30, C40, C50	Cap 100nF/ 50V/ 0805/ X7R/5%
26	1	C31	Cap 2.2nF/ 16V/ 0603/ X7R/10%
27	2	C32, C38	Cap 10nF/ 50V/ 0805/ C0G/5%
28	1	C33	Cap 1nF/ 1kV/ Radial Type/ U2J/5%
29	1	C34	Cap 1uF/ 16V/ 0603/ X7R/10%
30	2	C36, C42	Cap 100pF/ 50V/ 0603/ C0G/1%
31	1	C37	Cap 220nF/ 50V/ 0603 (1608)/ X7R/10%
32	1	C46	Cap 470nF/ 50V/ 0603/ X7R/10%
33	1	C53	Cap 220nF/ 50V/ 0805/ X7R/10%
34	5	D1, D2, D3, D4, D6	Dio S2M/ 1kV/ DO-214AA/ /
35	1	D5	Dio STTH310S/ 1kV/ SMC/ /
36	1	D7	Dio 16V/ / MELF DO-213AB/ /
37	2	D8, D10	Dio 1N4006G/ 800V/ DO-41 (Case 59-10)/ /
38	10	D9, D13, D15, D19, D21, D29, D31, D34, D36, D37	Dio MCL4148-TR3/ 100V/ MicroMELF/ /
39	1	D11	Dio 7.50V/ / SOD-80/ /
40	1	D12	Dio S1M/ / DO-214AC (SMA)/ /
41	1	D14	Dio HS1M/ 1kV/ DO-214AC (SMA)/ /
42	4	D18, D23, D30, D35	Dio LL4148/ / SOD-80 2L/ /
43	1	D20	Dio 3.3V/ / SOD80C/ /

chanhvinh.com

44	1	D24	Dio BAW156/ / SOT23/ /
45	1	D25	Dio 5.10V/ / SOD80C/ /
46	1	D26	Dio 5.60V/ / SOD-80/ /
47	1	D27	Dio 16V/ / Axial DO-35 (CASE 017AG)/ /
48	1	D28	Dio 12V/ / SOD-80/ /
49	1	D33	Dio BAS85/ / SOD80C/ /
50	1	F1	Con 0031.8231/ / THT/ /
51	1	HSGND	Con 5004/ / CON-THT-TP-5004/ /
52	1	IC1	Int ICL5102HV/ / SOIC127P1030X265-20_19N/ /
53	2	IC2, IC3	Int TL431QDBZR,215/ / SOT-23/ /
54	1	IC4	Opt PC817XNNSZ0F/ / DIP-4/ /
55	1	IC5	Int IR11688S/ / SOIC-8/ /
56	1	IC6	Ana LM321MF/ / SOT-23-5/ /
57	1	J1	Con JP-6.35_0.80-2P/ / JP-THT-JL-250-25-T/ /
58	2	J2, J3	Con JP-17.5_0.80-2P/ / JP-THT-1.00_2.20_17.5_0.80-2P/ /
59	1	J4	Con JP-15.24_0.80-2P/ / JP-THT-JL-600-25-T/ /
60	2	J5, J6	Con JP-10.16_0.80-2P/ / JP-THT-JL-400-25-T/ /
61	1	L1	Tra NP2007-2745/ / THT/ /
62	2	L3, L10	Ind 7A, 20mOhm/ / THT/ /
63	1	L4	Tra NP2018-12481/ / THT/ /
64	1	L5	Tra NP2018-12478/ / THT/ /
65	1	L6	Tra NP2018-12482/ / THT/ /
66	1	L7	Ind 22uH/ / THT/ /20%
67	1	L8	Tra NP2018-12479/ / THT/ /
68	1	L9	Tra NP2018-12480/ / THT/ /
69	1	R1	Res / 745V/ Radial/ /
70	7	R2, R3, R4, R5, R12, R13, R14	Res 1.5R/ 200V/ 1206/ /1%
71	2	R6, R51	Res 10R/ 150V/ 0805/ /1%
72	1	R7	Res 10R/ 50V/ 0603/ /1%
73	6	R8, R9, R10, R11, R56, R57	Res 330k/ 200V/ 1206/ /1%
74	1	R15	Res 68R/ 200V/ 1206/ /1%
75	1	R16	Res 68R/ 150V/ 0805/ /1%
76	1	R17	Res 470R/ 200V/ 1206/ /1%
77	3	R18, R68, R78	Res 100k/ 75V/ 0603/ /1%
78	4	R19, R20, R22, R23	Res 750k/ 200V/ 1206/ /1%
79	1	R21	Res 150R/ 150V/ 0805/ /1%
80	1	R24	Res 820k/ 200V/ 1206/ /1%
81	1	R25	Res 12k/ 50V/ 0603/ /1%
82	3	R26, R28, R29	Res 5.6MEG/ 200V/ 1206/ /1%
83	1	R27	Res 82k/ 75V/ 0603/ /1%
84	1	R30	Con JP-THT-1.00_2.20_12.5_0.80-2P/ / JP-THT-1.00_2.20_12.5_0.80-2P/ /
85	1	R31	Res 130k/ 150V/ 0805/ /1%
86	1	R32	Res 1.5k/ 200V/ 1206/ /1%
87	1	R32a	Res 4.7k/ 200V/ 1206/ /1%
88	3	R33, R55, R87	Res 0R/ 50V/ 0603/ /0R
89	1	R34	Res 150k/ 75V/ 0603/ /1%
90	1	R35	Res 220k/ 200V/ 1206/ /1%
91	4	R36, R37, R38, R39	Res 180k/ 200V/ 1206/ /1%

chanhvinh.com

92	4	R40, R74, R84, R99	Res 0R/ 200V/ 1206/ /0R
93	1	R41	Res 43k/ 150V/ 0805/ /1%
94	1	R42	Res 10R/ 200V/ 1206/ /1%
95	2	R43, R69	Res 180k/ 150V/ 0805/ /1%
96	1	R44	Res 10R/ / Radial Type/ /20%
97	3	R45, R75, R76	Res 100R/ 200V/ 1206/ /1%
98	1	R46	Res 180R/ 200V/ 1206/ /1%
99	1	R47	Res 5.1k/ 75V/ 0603/ /1%
100	1	R48	Res 10k/ 75V/ 0603/ /1%
101	3	R49, R50, R86	Res 47k/ 150V/ 0805/ /1%
102	1	R52	Res 10k/ 200V/ 1206/ /1%
103	1	R53	Res 56k/ 75V/ 0603/ /1%
104	1	R54	Res 18k/ 75V/ 0603/ /1%
105	1	R58	Res 3.3k/ 75V/ 0603/ /1%
106	5	R59, R60, R61, R62, R63	Res 100k/ 200V/ 1206/ /1%
107	1	R64	Res 4.7k/ 75V/ 0603/ /1%
108	1	R65	Res 12k/ 150V/ 0805/ /1%
109	3	R66, R82, R89	Res 5.6k/ 75V/ 0603/ /1%
110	1	R67	Res 220R/ 75V/ 0603/ /1%
111	1	R69a	Res 22k/ 150V/ 0805/ /1%
112	1	R70	Res 470R/ 75V/ 0603/ /1%
113	1	R71	Res 100k/ / 0805/ /5%
114	1	R73	Res 330R/ 150V/ 0805/ /1%
115	1	R77	Pas B59885C0120A051/ / Radial/ /
116	1	R79	Res 33R/ 150V/ 0805/ /1%
117	1	R80	Res 1k/ 75V/ 0603/ /1%
118	1	R81	Res 560R/ 75V/ 0603/ /1%
119	1	R83	Res 270k/ 150V/ 0805/ /1%
120	2	R85, R92	Res 470R/ 150V/ 0805/ /1%
121	1	R90	Res 16k/ 75V/ 0603/ /1%
122	1	R91	Res 3.3k/ 75V/ 0603/ /1%
123	1	R94	Res 51k/ 75V/ 0603/ /1%
124	3	R95, R96, R98	Res 0R/ 150V/ 0805/ /0R
125	1	R97	Res 1.8MEG/ 200V/ 1206/ /1%
126	1	T1	Tra BCX70K E6327/ / SOT23/ /
127	1	T2	Tra BC857A/ / SOT23/ /
128	1	T3	Tra IPD95R450P7/ / PG-TO263/ /
129	2	T4, T5	Tra IPD90R1K2C3/ / PG-TO252-3/ /
130	1	T7	Tra BC846ALT1G/ / SOT23 - 3 Leads/ /
131	2	T8, T9	Tra IPD530N15N3 G/ / PG-TO252-3/ /
132	2	T10, T11	Tra BC817K-40/ / SOT23/ /
133	1	VCC	Con 5000/ / CON-THT-TP-5000/ /
134	1	X1	Con 250-603/ 1kV/ THT/ /
135	2	X2, X3	Con 250-202/ 320V/ CON-TER-THT-250-202_000-012/ /
136	0	BO_S, OVP, PFCVS, T7_E, VREF, XD13_K	Con -/ / testpad_1.00mm/ /
137	0	C2	Cap NM/ 760V/ THT/ /20%
138	0	C51	Cap NM/ 50V/ 0603 (1608)/ X8L/10%
139	0	C52	Cap NM/ 50V/ 0603/ X7R/10%
140	0	MP1, MP2, MP3, MP4	Mec D00687/ / M3 X 6mm Pan Head,Cross Head Metric Screw, 5.6mm X 2.4mm Head/ /
141	0	R72	Res NM/ 75V/ 0603/ /1%

chanhvinh.com

8 Reference

[1] Engineering report: 130 W dimmable constant current LED driver using ICL5102 in PFC and LLC technology – https:/www.infineon.com/dgdl/Infineon-EngineeringReport_130W_dimmable_constant_current_LED_driver_ICL5102-AN-v02_00-EN.pdf?fileId=5546d4626102d35a01612de7a06b6fb3

chanhvinh.com

Revision history

Document version	Date of release	Description of changes
V1.0	02.09.2019	

chanhvinh.com

Trademarks
All referenced product or service names and trademarks are the property of their respective owners.

Edition 2019-09-02
Published by
Infineon Technologies AG
81726 Munich, Germany

© 2020 Infineon Technologies AG.
All Rights Reserved.

Do you have a question about this document?
Email: erratum@infineon.com

Document reference
ER_1907_PL21_1907_155326

IMPORTANT NOTICE
The information given in this document shall in no event be regarded as a guarantee of conditions or characteristics (“Beschaffenheitsgarantie”) .

With respect to any examples, hints or any typical values stated herein and/or any information regarding the application of the product, Infineon Technologies hereby disclaims any and all warranties and liabilities of any kind, including without limitation warranties of non-infringement of intellectual property rights of any third party.

In addition, any information given in this document is subject to customer’s compliance with its obligations stated in this document and any applicable legal requirements, norms and standards concerning customer’s products and any use of the product of Infineon Technologies in customer’s applications.

The data contained in this document is exclusively intended for technically trained staff. It is the responsibility of customer’s technical departments to evaluate the suitability of the product for the intended application and the completeness of the product information given in this document with respect to such application.

For further information on the product, technology, delivery terms and conditions and prices please contact your nearest Infineon Technologies office (**www.infineon.com**).

WARNINGS
Due to technical requirements products may contain dangerous substances. For information on the types in question please contact your nearest Infineon Technologies office.

Except as otherwise explicitly approved by Infineon Technologies in a written document signed by authorized representatives of Infineon Technologies, Infineon Technologies’ products may not be used in any applications where a failure of the product or any consequences of the use thereof can reasonably be expected to result in personal injury.