chanhvinh.com

User Guide for REF-DR3KIMBGSICMA

Reference design for motor drive integration

About this document

Scope and purpose

This user guide provides an overview of the reference board REF-DR3KIMBGSICMA including its main features, key data, pin assignments and mechanical dimensions.

REF-DR3KIMBGSICMA is a reference design contains two PCBs (named as driver board and power board respectively), including driver circuit and a three-phase inverter for motor-drive application. The driver circuit is based on EiceDriver™ IC - 1EDI20I12MH with miller clamp function. CoolSiC™ MOSFET – IMBG120R45M1H is the main component for the three-phase inverter.

The REF-DR3KIMBGSICMA was developed to support customers during their first steps in designing with EiceDriver™ IC and CoolSiC™ MOSFET for a servo motor with inverter integration. This reference design is the power part of demonstration of the integrated servo motor, which is an Infineon joint development project with partner JingChuan and Maxsine.

https://www.infineon.com/ http://www.igbt.cn/ http://www.maxsine.com/

Intended audience

This user guide is intended for all technical specialists working with the REF-DR3KIMBGSICMA.

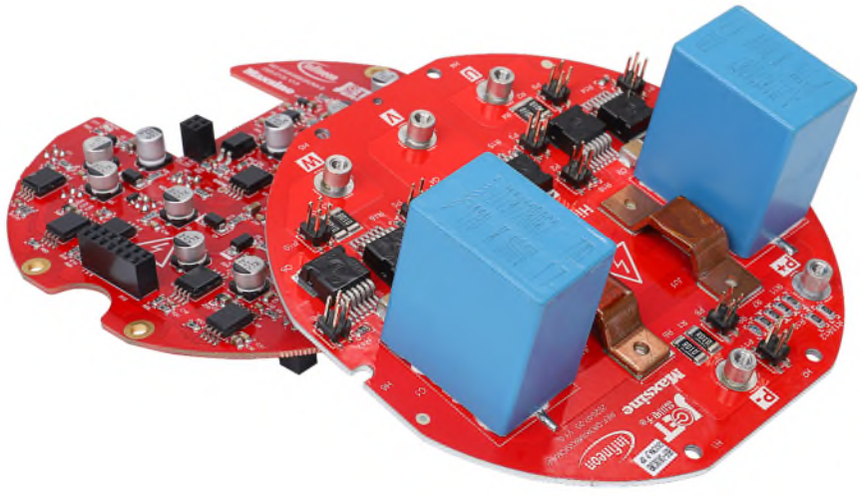

Reference Board/Kit

The Infineon product(s) are embedded on this PCB with functions and form factor close to a commercial design. PCB and auxiliary circuits are optimized for the final design.

Note: Boards do not necessarily meet safety, EMI, quality standards (for example UL, CE) requirements.

chanhvinh.com

Important notice

“Evaluation Boards and Reference Boards” shall mean products embedded on a printed circuit board (PCB) for demonstration and/or evaluation purposes, which include, without limitation, demonstration, reference and evaluation boards, kits and design (collectively referred to as “Reference Board”).

Environmental conditions have been considered in the design of the Evaluation Boards and Reference Boards provided by Infineon Technologies. The design of the Evaluation Boards and Reference Boards has been tested by Infineon Technologies only as described in this document. The design is not qualified in terms of safety requirements, manufacturing and operation over the entire operating temperature range or lifetime.

The Evaluation Boards and Reference Boards provided by Infineon Technologies are subject to functional testing only under typical load conditions. Evaluation Boards and Reference Boards are not subject to the same procedures as regular products regarding returned material analysis (RMA), process change notification (PCN) and product discontinuation (PD).

Evaluation Boards and Reference Boards are not commercialized products, and are solely intended for evaluation and testing purposes. In particular, they shall not be used for reliability testing or production. The Evaluation Boards and Reference Boards may therefore not comply with CE or similar standards (including but not limited to the EMC Directive 2004/EC/108 and the EMC Act) and may not fulfill other requirements of the country in which they are operated by the customer. The customer shall ensure that all Evaluation Boards and Reference Boards will be handled in a way which is compliant with the relevant requirements and standards of the country in which they are operated.

The Evaluation Boards and Reference Boards as well as the information provided in this document are addressed only to qualified and skilled technical staff, for laboratory usage, and shall be used and managed according to the terms and conditions set forth in this document and in other related documentation supplied with the respective Evaluation Board or Reference Board.

It is the responsibility of the customer’s technical departments to evaluate the suitability of the Evaluation Boards and Reference Boards for the intended application, and to evaluate the completeness and correctness of the information provided in this document with respect to such application.

The customer is obliged to ensure that the use of the Evaluation Boards and Reference Boards does not cause any harm to persons or third party property.
The Evaluation Boards and Reference Boards and any information in this document is provided "as is" and Infineon Technologies disclaims any warranties, express or implied, including but not limited to warranties of non-infringement of third party rights and implied warranties of fitness for any purpose, or for merchantability.

Infineon Technologies shall not be responsible for any damages resulting from the use of the Evaluation Boards and Reference Boards and/or from any information provided in this document. The customer is obliged to defend, indemnify and hold Infineon Technologies harmless from and against any claims or damages arising out of or resulting from any use thereof.

Infineon Technologies reserves the right to modify this document and/or any information provided herein at any time without further notice.

chanhvinh.com

Safety precautions

Please note the following warnings regarding the hazards associated with development systems.

Table 1 Safety precautions

	**Warning:** The DC link potential of this board is up to 1000 V_{DC}. When measuring voltage waveforms by oscilloscope, high voltage differential probes must be used. Failure to do so may result in personal injury or death.
	**Warning**: *The evaluation or reference board contains DC bus capacitors which take time to discharge after removal of the main supply. Before working on the drive system, wait five minutes for capacitors to discharge to safe voltage levels. Failure to do so may result in personal injury or death. Darkened display LEDs are not an indication that capacitors have discharged to safe voltage levels.*
	**Warning:** *The evaluation or reference board is connected to the grid input during testing. Hence, high-voltage differential probes must be used when measuring voltage waveforms by oscilloscope. Failure to do so may result in personal injury or death. Darkened display LEDs are not an indication that capacitors have discharged to safe voltage levels.*
	**Warning:** *Remove or disconnect power from the drive before you disconnect or reconnect wires, or perform maintenance work. Wait five minutes after removing power to discharge the bus capacitors. Do not attempt to service the drive until the bus capacitors have discharged to zero. Failure to do so may result in personal injury or death.*
	**Caution:** *The heat sink and device surfaces of the evaluation or reference board may become hot during testing. Hence, necessary precautions are required while handling the board. Failure to comply may cause injury.*
	**Caution:** *Only personnel familiar with the drive, power electronics and associated machinery should plan, install, commission and subsequently service the system. Failure to comply may result in personal injury and/or equipment damage.*
	**Caution:** *The evaluation or reference board contains parts and assemblies sensitive to electrostatic discharge (ESD). Electrostatic control precautions are required when installing, testing, servicing or repairing the assembly. Component damage may result if ESD control procedures are not followed. If you are not familiar with electrostatic control procedures, refer to the applicable ESD protection handbooks and guidelines.*
	**Caution:** *A drive that is incorrectly applied or installed can lead to component damage or reduction in product lifetime. Wiring or application errors such as undersizing the motor, supplying an incorrect or inadequate AC supply, or excessive ambient temperatures may result in system malfunction.*
	**Caution:** *The evaluation or reference board is shipped with packing materials that need to be removed prior to installation. Failure to remove all packing materials that are unnecessary for system installation may result in overheating or abnormal operating conditions.*

chanhvinh.com

Table of contents

About this document **1**
Important notice ..... Error! Bookmark not defined.
Safety precautions **3**
Table of contents **4**
1 The board at glance **5**
1.1 Delivery content 5
1.2 Block diagram 6
1.3 Main features 6
1.4 Board parameters and technical data 7
2 System and functional description **8**
2.1 Commissioning 8
2.2 Example: Basic operation using MAKD controller 9
3 System design **11**
3.1 Schematics 11
3.2 Layout 13
3.3 Bill of material 14
3.4 Connector details 16
4 System performance **18**
5 References and appendices **20**
Revision history **21**

chanhvinh.com

1 The board at glance

The REF-DR3KIMBGSICMA are the inverter board and the gate driver board for the demonstration of an integrated servo motor and drive. The driver circuit is based on EiceDriver™ IC - 1EDI20I12MH with miller clamp function. CoolSiC™ MOSFET – IMBG120R45M1H is the main component for the three-phase inverter.

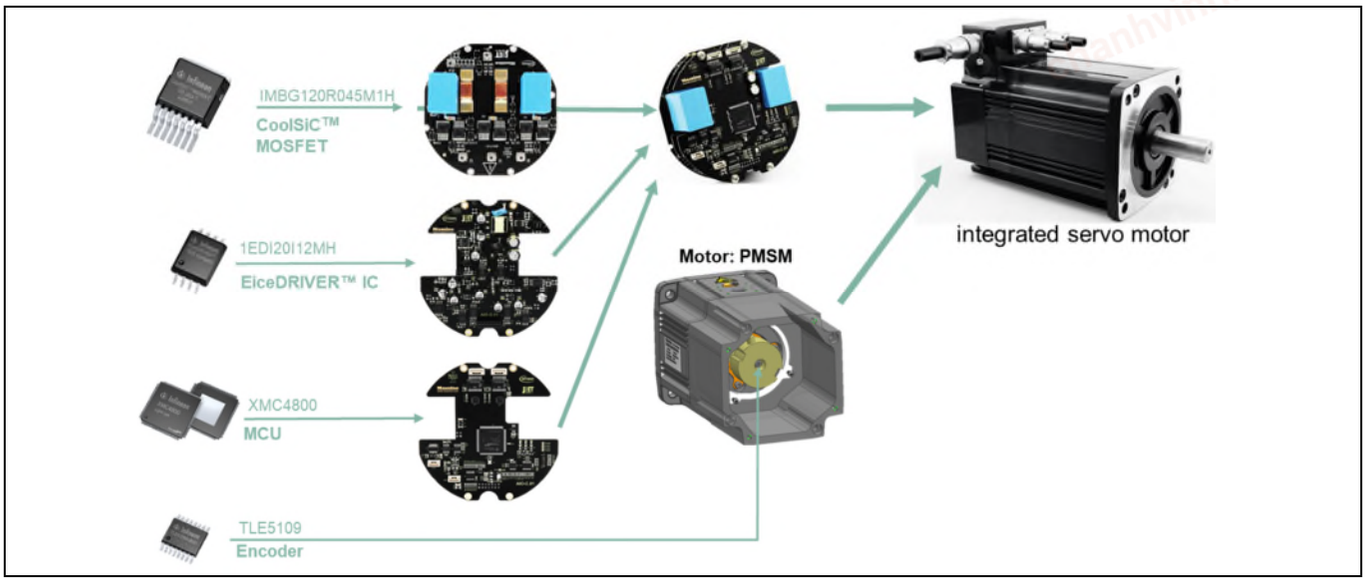

Figure 1 The demonstration of an integrated servo motor with drive

The full demonstration consists of: an inverter board, a gate driver board, a controller board and a servo motor, as show in Figure 1. The control board and the motor are not part of the reference design.

To evaluate the electrical performance of the system, the iMOTION™ MADK EVAL-M1-101T can be used to provide a simple control. An adapter cable is included for simple connection, between the EVAL-M1-101T and REF-DR3KIMBGSICMA. Also, a heatsink is also provided to represent the motor housing for cooling. Even through the system could work without a cooling fan, a fan and a holder is also included for easy evaluation.

1.1 Delivery content

The reference board REF-DR3KIMBGSICMA is delivered together with complete documentation in an environmentally friendly carton box.

As depicted, the box contains:

- Reference board assembled as a stack with a size of 12 cm x 11.3 cm x 10 cm (LxWxH), including an inverter board, a gate driver board, a heatsink and a cooling fan.
- An adapter cable, for connection between EVAL-M1-101T and REF-DR3KIMBGSICMA
- User guide
- Introduction sheet

chanhvinh.com

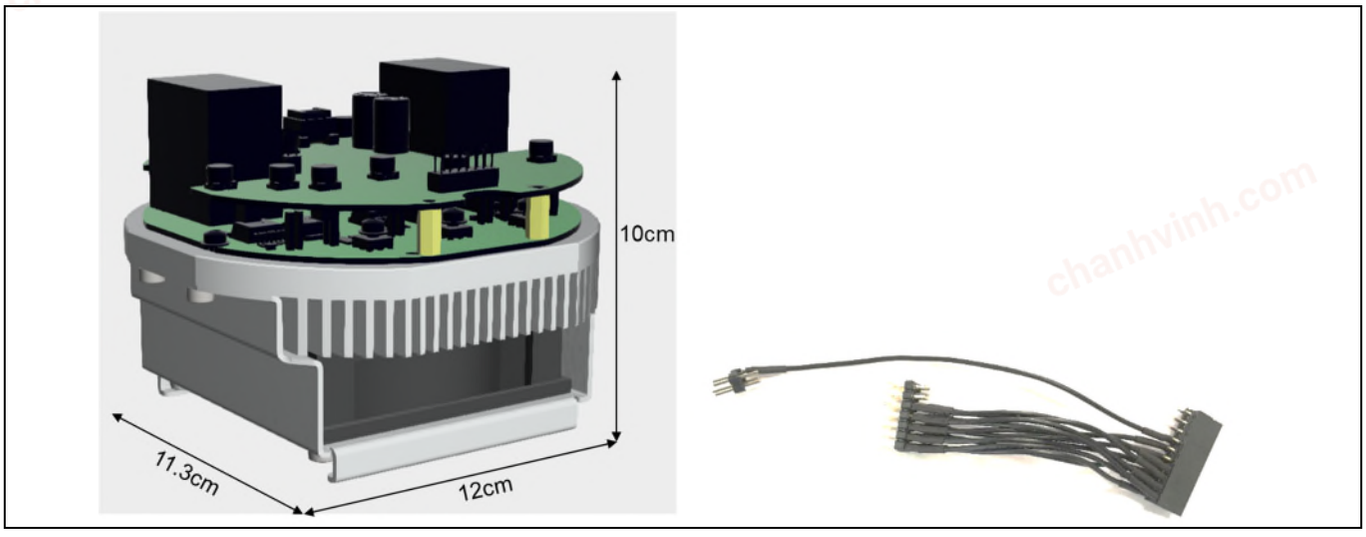

Figure 2 Content of delivery

1.2 Block diagram

The inverter is a standard 3 phase 2 level topology, with DC link capacitor and 6 CoolSiC™ MOSFET D²PAK IMBG120R45M1H. The components are soldered on a single layer IMS board. All CoolSiC™ MOSFET are driven by isolated gate driver, EiceDriverTM IC - 1EDI20I12MH with miller clamp function.

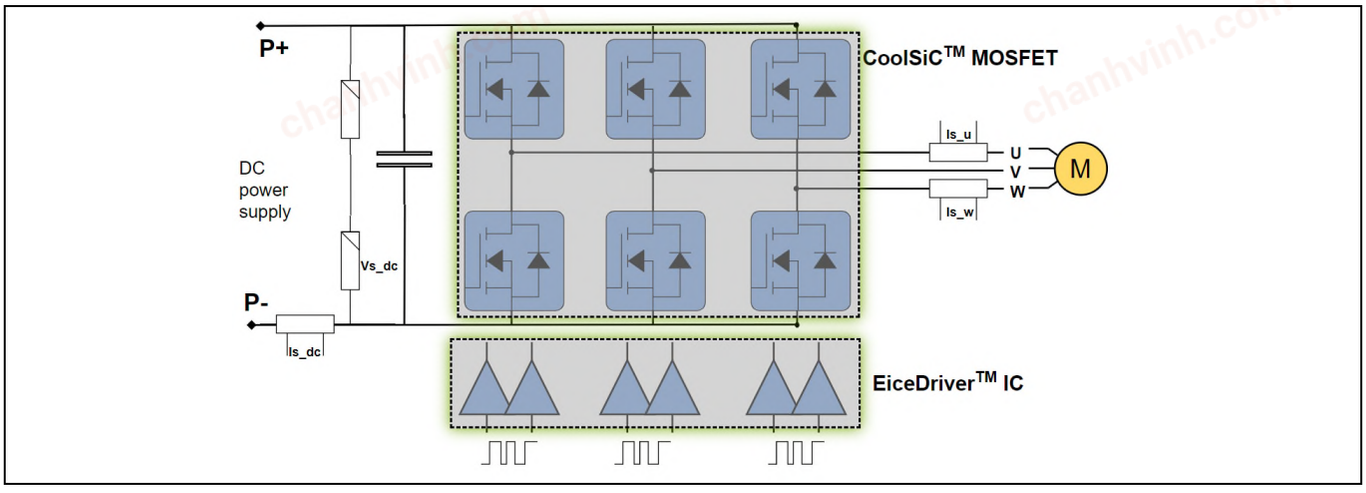

Figure 3 Block diagram

1.3 Main features

- 3 phase servo motor with integrated drive
- 1200 V/45mΩ CoolSiC™ MOSFET in SMD package (TO263-7L), with .XT interconnection technology
- Compact design: PCB diameter 110mm
- IMS (Insulated Metallic Substrate) PCBs with high thermal conductivity
- With over current protection
- Input voltage 350 – 800 VDC
- Output voltage 220VAC, 380VAC, 480VAC

chanhvinh.com

1.4 Board parameters and technical data

Table 2 Keys Parameters

Parameter	Values	Conditions
Input voltage (DC)	350 ~ 800 V	
Output voltage (AC, 3-ph)	220 ~ 480 V	
Output current (AC, 3-ph)	5 A	Without forced air
Output peak current (AC, 3-ph)	15 A	Without forced air, < 0.25 s
Output power	4 kW	Without forced air
Ambient temperature	From 0 to 40 °C	

chanhvinh.com

2 System and functional description

2.1 Commissioning

The REF-DR3KIMBGSICMA board is intended for evaluation of CoolSiC™ MOSFET solution in the integrated servo drive application. Therefore, the control of the servo motor is not the focus. This section introduces the minum conections to start the evaluation.

The gate driver board minimum connection:

- Auxillary power supply connection CN1 (input): 0 ~ 24V DC from an external power supply
- Gate driver signal connection P12, pin1~6 (input): controller 3 phase gating signals

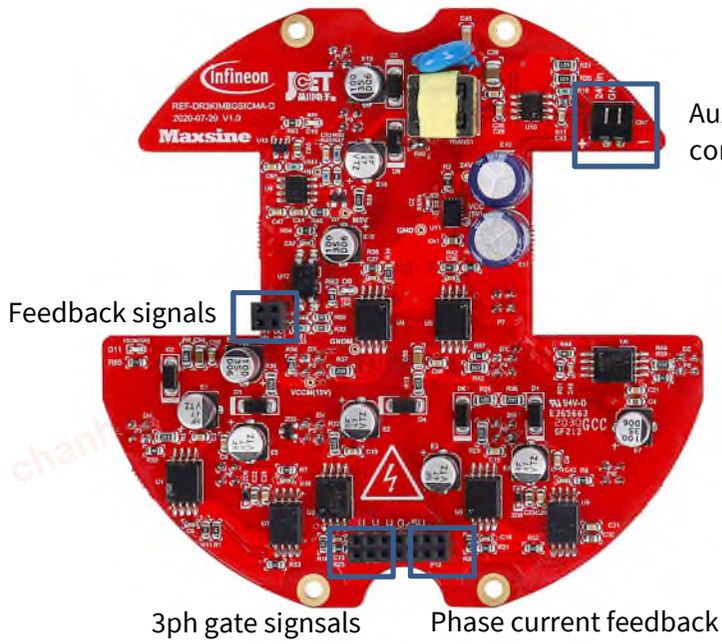

For feedback control, the following measurements are also provided: phase current, DC link voltage, DC current, temperature feedback.

The power board minimum connection:

- DC link connection (input): 350 ~ 800 V DC from an external power supply
- 3 phase AC (output): to 3ph motor or RL load

chanhvinh.com

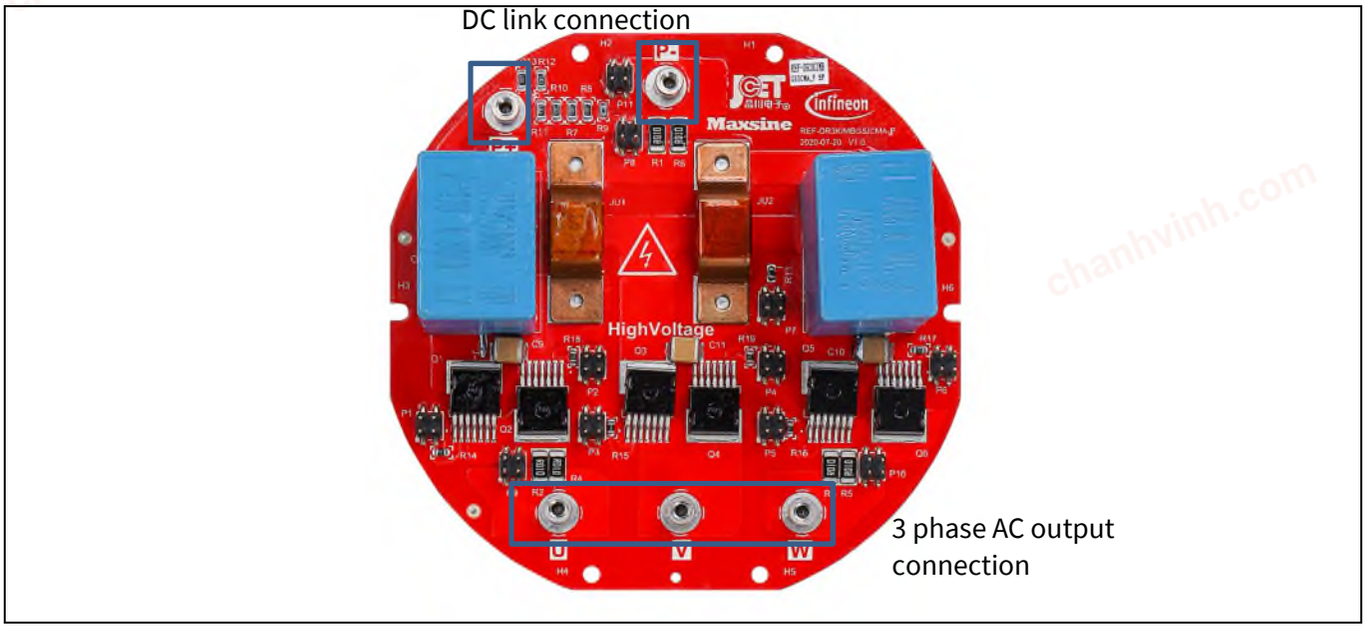

2.2 Example: Basic operation using MAKD controller

The REF-DR3KIMBGSICMA board is intended for evaluation of CoolSiC™ MOSFET solution in the integrated servo drive application. Therefore, the control of the servo motor is not the focus. For an easy evaluation, the iMOTION™ MADK EVAL-M1-101T can be used to start with. A detailed description of the drive card can be found online:

https://www.infineon.com/cms/en/product/evaluation-boards/eval-m1-101t/

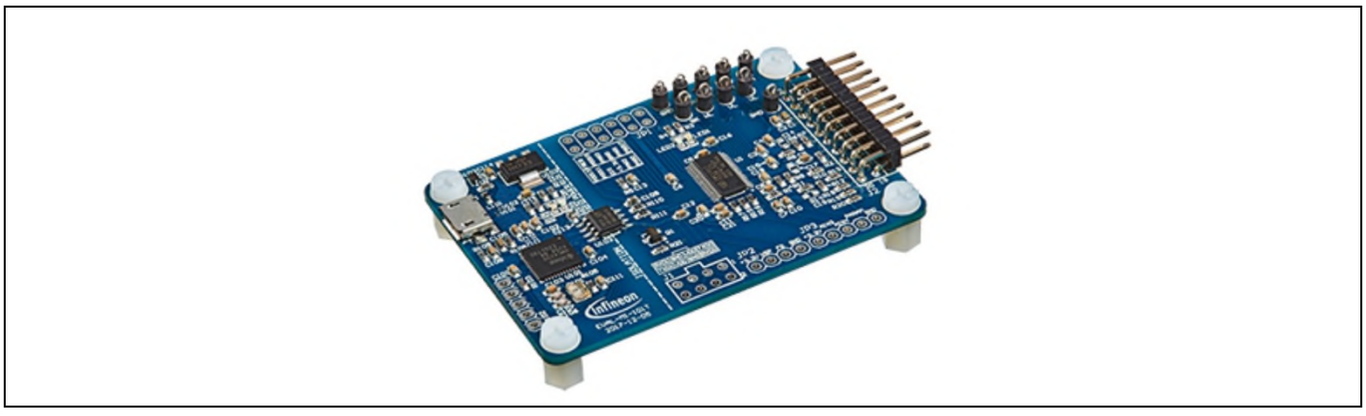

Figure 4 iMOTION™ MADK EAVL-M1-101T

The detailed connection between REF-DR3KIMBGSICMA and EVAL-M1-101T is shown in Figure 5.

chanhvinh.com

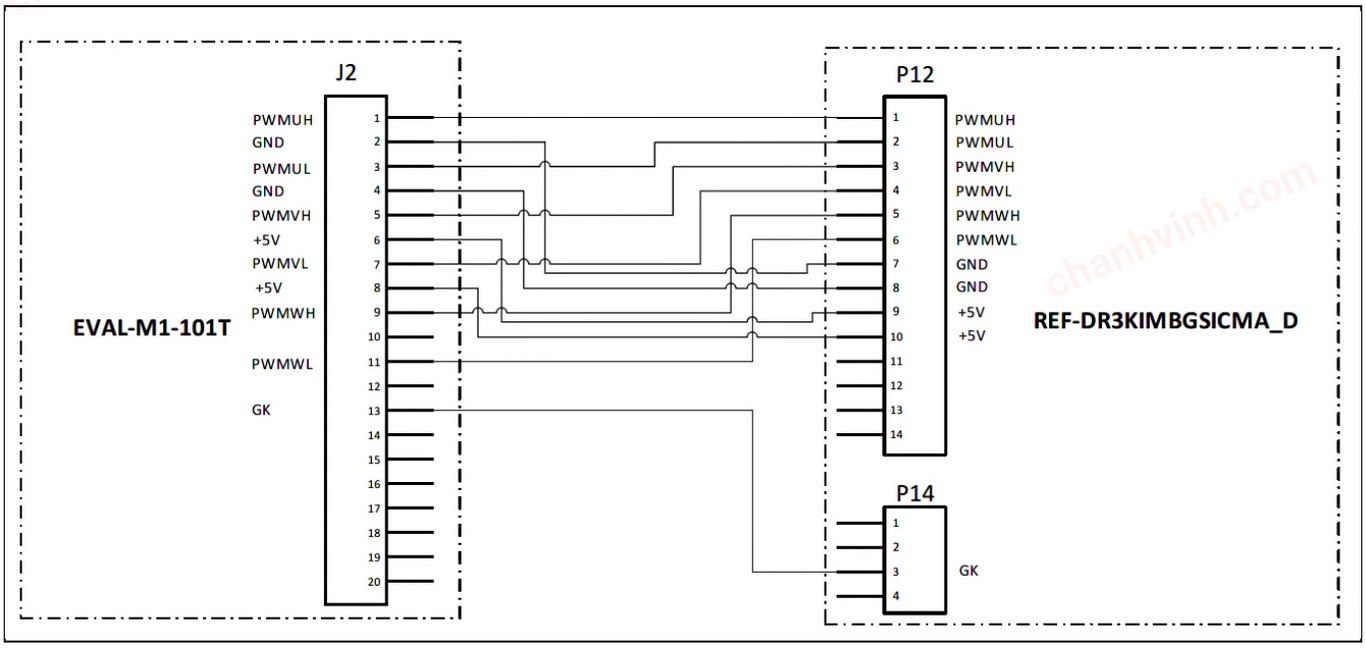

Figure 5 Connection diagram

For an easy connection, an adaption cable is included in the delivery box.

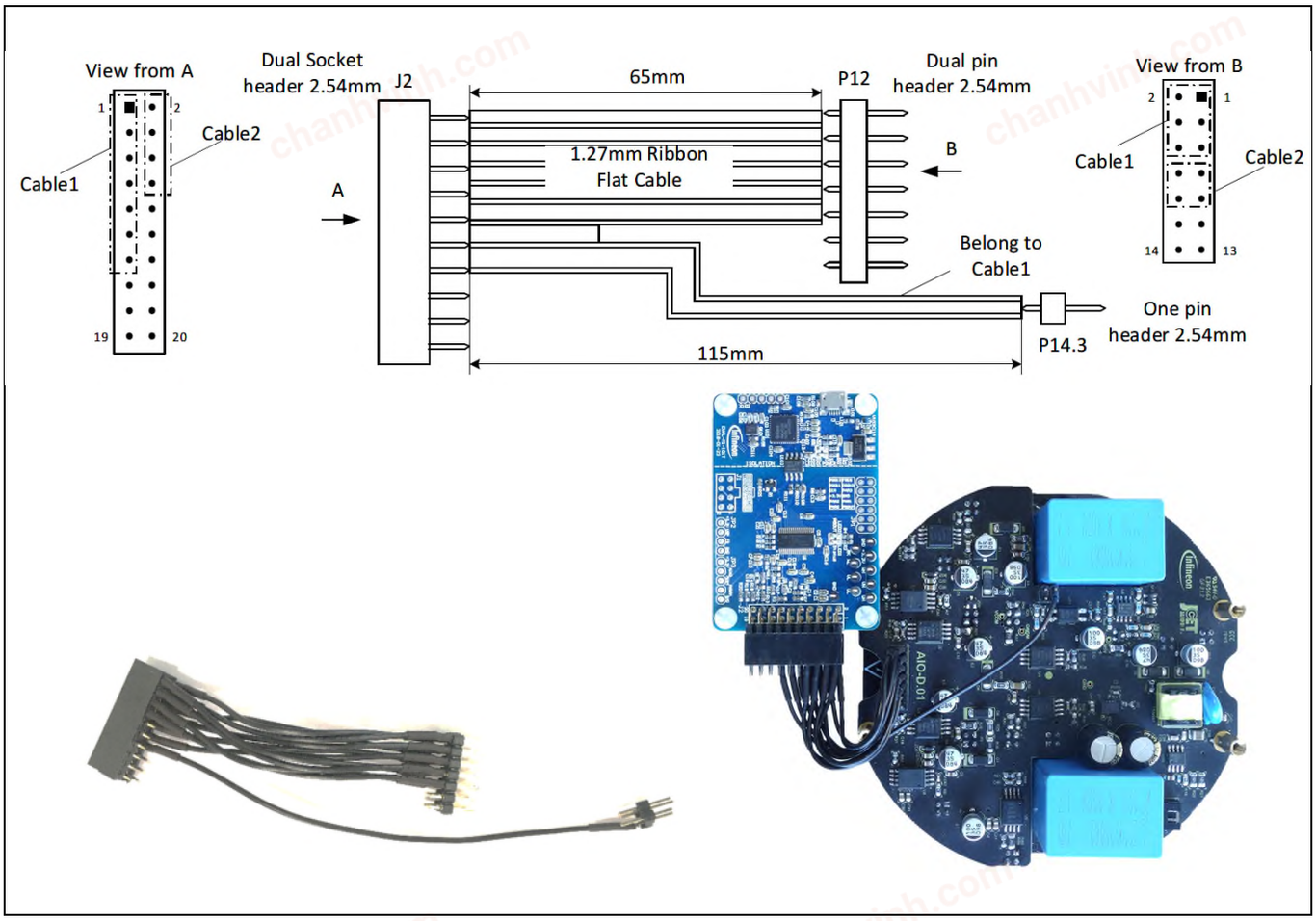

Figure 6 Connection between REF-DR3KIMBGSICMA and EVAL-M1-101T using the adaption cable

The detailed description of V/F modulation using EVAL-M1-101T is shown in the reference.

chanhvinh.com

3 System design

3.1 Schematics

The schematics of the power board is shown in Figure 7.

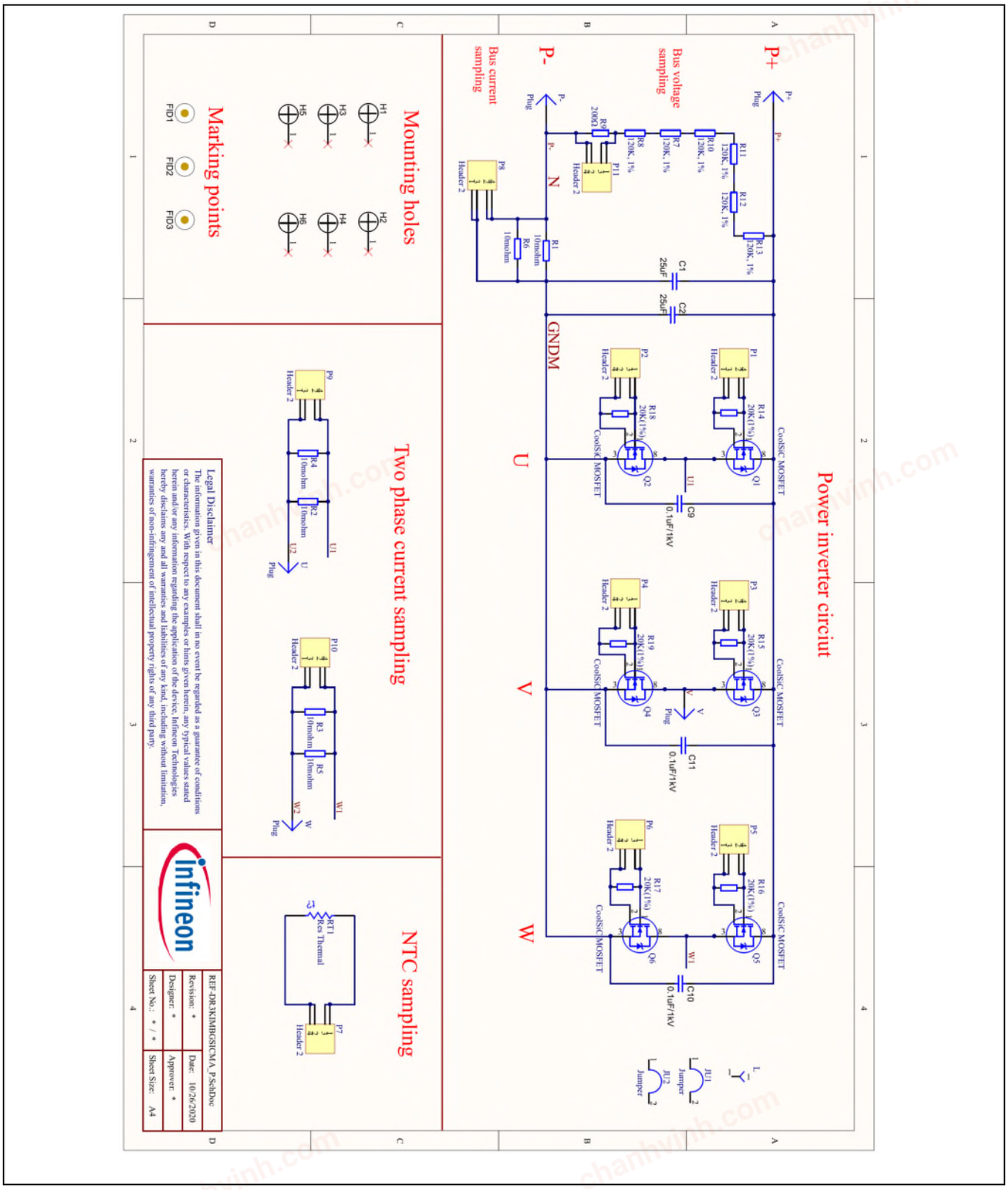

Figure 7 The schematics of the power board (REF-DR3KIMBGSICMA-P)

chanhvinh.com

The schematics of the gate driver board is shown in Figure 8.

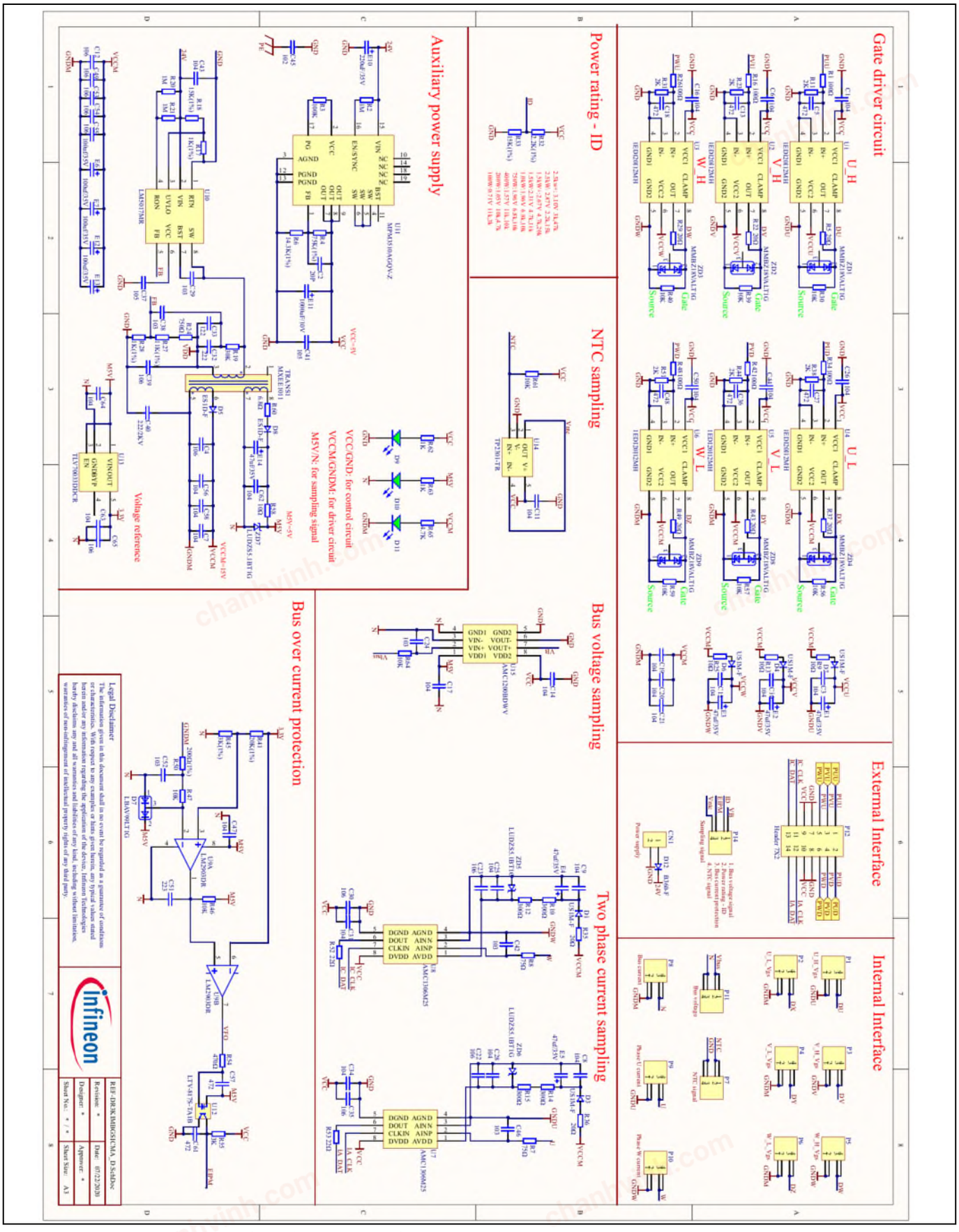

Figure 8 The schematics of the gate driver board (REF-DR3KIMBGSICMA-D)

chanhvinh.com

3.2 Layout

The power board is a single layer IMS board. And the gate driver board is a 4 layers PCB board. The layouts of each board are shown in Figure 9 and Figure 10.

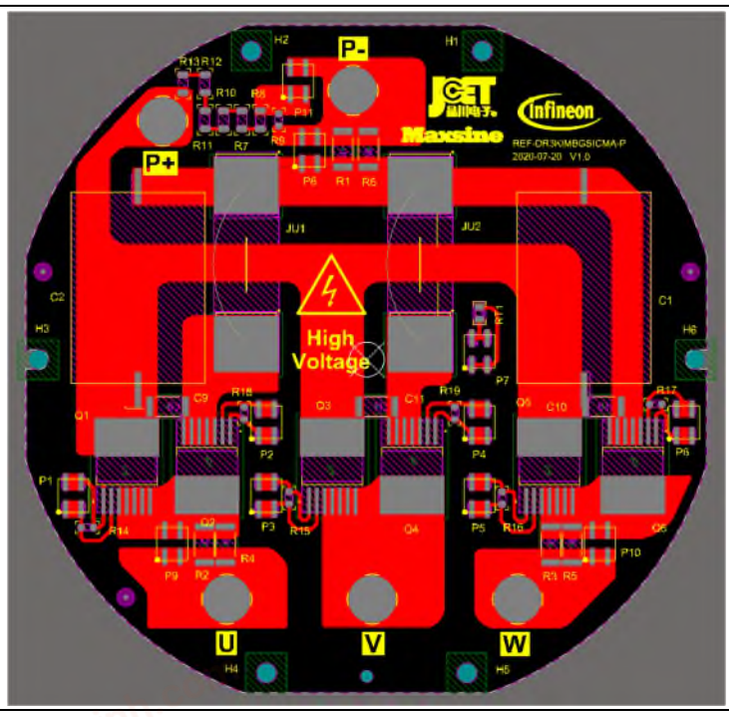

Figure 9 The layout of the power board (REF-DR3KIMBGSICMA-P)

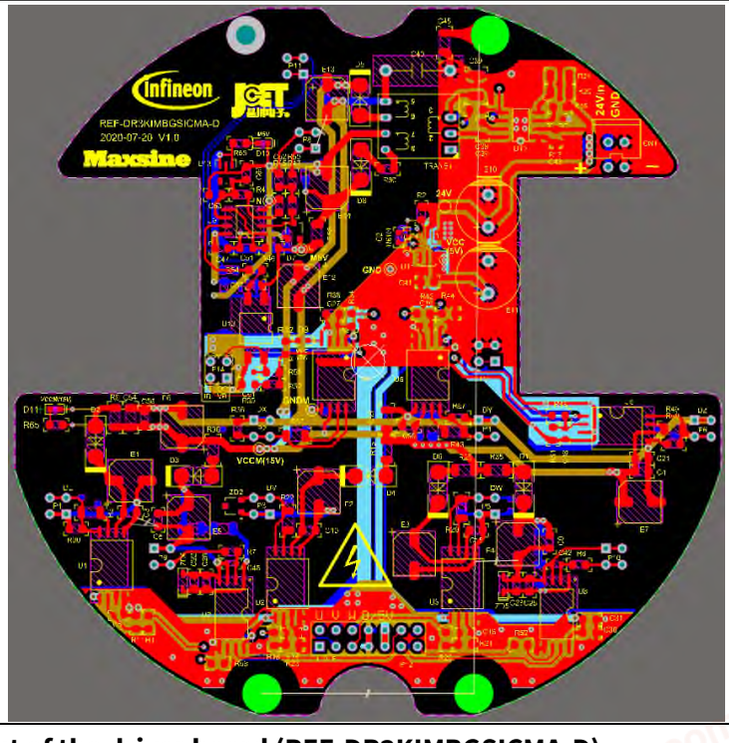

Figure 10 The layout of the driver board (REF-DR3KIMBGSICMA-D)

chanhvinh.com

3.3 Bill of material

The complete bill of material is available on the download section of the Infineon homepage.

Table 3 BOM of power board

No.	Ref Designator	Description	Manufacturer	Manufacturer P/N
1	Q1, Q2, Q3, Q4, Q5, Q6	CoolSiC™ 1200V SiC Trench MOSFET	Infineon	IMBG120R045M1H
2	C1, C2	DC bulk capacitor	EPCOS(TDK)	B32774D8126K000
3	C9, C10, C11	Snubber capacitor 0.1UF/1KV X7R 2512	/	
4	R1, R2, R3, R4, R5, R6	2512-10mΩ-1% 2W	/	PE2512FKE7W0R01L
5	R7, R8, R10, R11, R12, R13	120K(1%)-1206	/	
6	R9	200Ω(1%)-0805	/	
7	R14, R15, R16, R17, R18, R19	Resistor 20K/0805	/	
8	RT1	Thermal resistor 10K-0805	/	10K-0805
9	P1, P2, P3, P4, P5, P6, P7, P8, P9, P10, P11	Surface mounting connector 2.54mm 2*2P	/	2.54mm -2*2P
10	U,V,W,P+,P-	M3*ϕ5.56*L4+1.53	/	SMTS06040CTJ
11	JU1, JU2	Brass jumper 35*10*7mm	/	

Table 4 BOM of gate driver board

No.	Ref Designator	Description	Manufacturer	Manufacturer P/N
1	U1, U2, U3, U4, U5, U6	Driver IC with miller clamp function	Infineon	1EDI20I12MH
2	C1, C3, C6, C7, C8, C9, C10, C11, C14, C15, C16, C17, C19, C20, C21, C25, C26, C28, C31, C34, C43, C44, C47, C50, C56, C58, C62, C63, C64	104-C0805	/	/
3	C5, C13, C18, C27, C36, C48, C57, C61	472-C0603	/	/
4	C2	20P-C0603	/	/
5	C33	122-C0603	/	/
6	C32	222-C0603	/	/
7	C12, C49, C53, C54, C55	106-C1206	/	/
8	C37, C41	106-C0805	/	/
9	C39	106-C1210	/	/
10	C45	102-C1206	/	/
11	C24, C42, C46	103-C0603	/	/

chanhvinh.com

No.	Ref Designator	Description	Manufacturer	Manufacturer P/N
12	R1, R16, R26, R34, R42, R48	100Ω-R0805	/	/
13	R5, R22, R29, R35, R36, R37, R43, R49	20Ω-R1206	/	/
14	R7, R8	75Ω-R0603	/	/
15	R60	6.8Ω-R0805	/	/
16	R52, R53	22Ω-R0805	/	/
17	R54	470Ω-R0805	/	/
18	R24	750Ω-R0805	/	/
19	R62, R63	1K-R0805	/	/
20	R11, R23, R31, R38, R44, R51	2K-R0805	/	/
21	R55	3K-R0805	/	/
22	R65	4.7K-R0805	/	/
23	R30, R39, R40, R46, R47, R56, R57, R59, R61, R64	10K-R0805	/	/
24	R19	30K-R0805	/	/
25	R2	1M-R0805	/	/
26	R9, R13, R25, R58	10Ω-R1206	/	/
27	R10, R12, R14, R15	300Ω-R1206	/	/
28	R20, R21	1M-R1206	/	/
29	R50	200Ω(1%)-R0805	/	/
30	R32	2.2K(1%)-R0805	/	/
31	R45	3K(1%)-R0805	/	/
32	R27	11K(1%)-R0805	/	/
33	R18, R33	15K(1%)-R0805	/	/
34	R41	20K(1%)-R0805	/	/
35	R3	100K-R0805	/	/
36	R17, R28	1K(1%)-R0603	/	/
37	R6	14.3K(1%)-R0402	/	/
38	R4	75K(1%)-R0402	/	/
39	U13	TLV70033DDCR	/	SOT-23-5
40	U9	LM2903DR	/	SO-8
41	U7, U8	AMC1306M25	/	ACPL_C790
42	U11	MPM3510AGQV-Z	/	MPM3506A
43	U10	LM5017MR	/	ad8397
44	U14	Single OP Amp TP2301-TR	/	SOT-23-5
45	U12	Optocoupler,LTV-817S-TA1B	/	SMD_LEAD_2.54_4
46	U15	Optocoupler,AMC1200BDWV	/	ACPL_C790
47	D12	Diode,B360-F	/	DIODE-SMC
48	D7	Diode,LBAV99LT1G	/	SOT-23

chanhvinh.com

No.	Ref Designator	Description	Manufacturer	Manufacturer P/N
49	D5, D8	Diode,ES1D-F	/	DIODE_SMA
50	D1, D2, D3, D4, D6	Diode,US1M-F	/	DIODE_SMA
51	TRANS1	Transformer,MXEE1011	/	MXEE1011
52	ZD1, ZD2, ZD3, ZD4, ZD8, ZD9	Zener diode, MMBZ18VALT1G	/	SOT-23
53	ZD5, ZD6, ZD7	Zener diode,LUDZS5.1BT1G	/	SOD-323
54	E1, E2, E3, E4, E5, E14	Chip electrolytic capacitor, 47uf/35V	/	ECAP_FAI_6.3_SMT
55	E6, E7, E12, E13	Chip electrolytic capacitor, 100uf/35V	/	ECAP_FAI_6.3_SMT
56	E10	Electrolytic capacitor, 220uF/35V	/	ECAP_FAI_10
57	E11	Electrolytic capacitor, 1000uF/10V	/	ECAP_FAI_10
58	C40	Ceramic capacitor, 222/2KV	/	CD222
59	C51	223- C0805	/	/
60	C29, C38, C52	103- C0805	/	/
61	C4, C22, C23, C30, C35, C65	106- C0805	/	/
62	CN1	CON2, 2x2.54	/	2x2.54
63	P1, P2, P3, P4, P5, P6, P7, P8, P9, P10, P11, P14	Dual inline, 2.54x2	/	P4
64	P12	Dual inline, 2.54x7	/	HDR2X7
65	D9, D10, D11	Green LED-0603	/	/

3.4 Connector details

General information about the connectors of the REF-DR3KIMBGSICMA evaluation board is provided.

Table 5 Inverter board connectors

PIN	Label	Function
P+, P-	P+, P-	Power supply input for DC link
U, V, W	U, V, W	AC power output for motor
P24V	P24V	Auxilary power supplly input

Table 6 Gate driver board connector P12

PIN	Label	Function
1	PWMUH	Gating signal, high side, phase U
2	PWMUL	Gating signal, low side, phase U
3	PWMVH	Gating signal, high side, phase V
4	PWMVL	Gating signal, low side, phase V
5	PWMWH	Gating signal, high side, phase W

chanhvinh.com

6	PWMWL	Gating signal, low side, phase W
7	GND	
8	GND	
9	+5V	5V output for control board
10	+5V	5V output for control board
11	IC_CLK	Modulator clock input for IC(phase W)
12	IA_CLK	Modulator clock input for IA(phase U)
13	IC_DAT	Modulator data output for IC(phase W)
14	IA_DAT	Modulator data output for IA(phase U)

Table 7 Gate driver board connector P14

1	VB	Bus voltage signal
2	ID	Power rating identification
3	EIPM	Bus current protection
4	Vntc	Temperature signal from power board

Table 8 Gate driver board connector CN1

1	24V	24V power supply input
2	GND	power supply ground

chanhvinh.com

4 System performance

The acceleration and deceleration test is a common method to verify the performance of a servo system. Usually, a simulated inertia load is applied to the motor to complete the acceleration-deceleration action at the fastest speed. In this test, no additional brake system is required.

The test platform is composed of integrated servo motor and inertia simulator, DC power supply, Beckhoff controller and computer software platform, as shown in Figure 11.

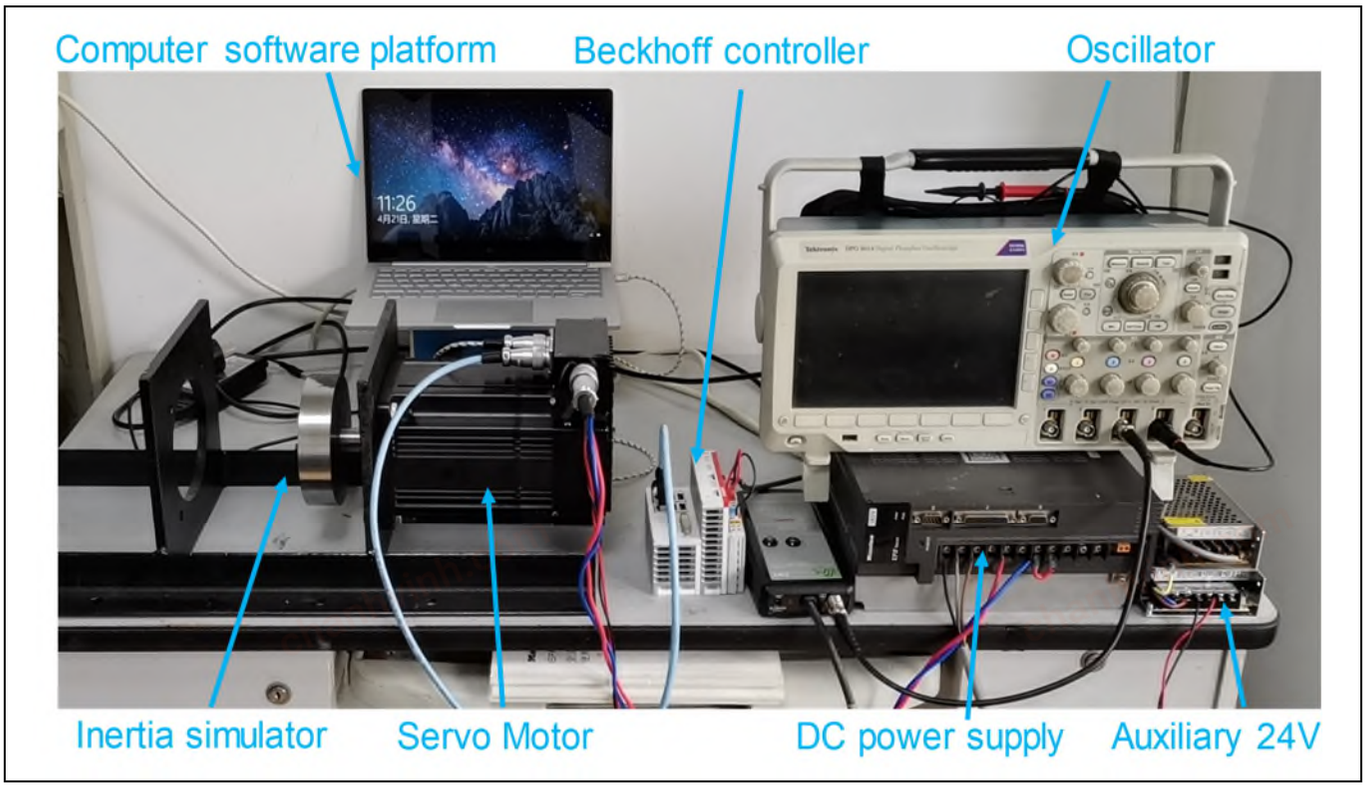

Figure 11 Experimental setup to measure the integrated servo motor

The motor shaft adapts to an inertia load of about 5 times of its normal inertia, then the integrated servo motor is reciprocating at +/- 1500rpm in speed mode through the Beckhoff's cx9020 controller. During the experiment, the SERVO soft Studio software on the PC is used to monitor the real-time signal from speed, current and torque of the motor. An oscillator is used to gather the signals of line current and arm voltage of SiC-MOSFET.

The test is performed with the DC bus voltage in 600V, acceleration and deceleration from +1500rpm to -1500rpm has accomplished in 150ms and 50ms respectively. In the normal response test, the peak value of line current reaches to approx.11A. In the fast response test, the peak value is up to approx.28A, thus the most critical condition is verified successfully.

chanhvinh.com

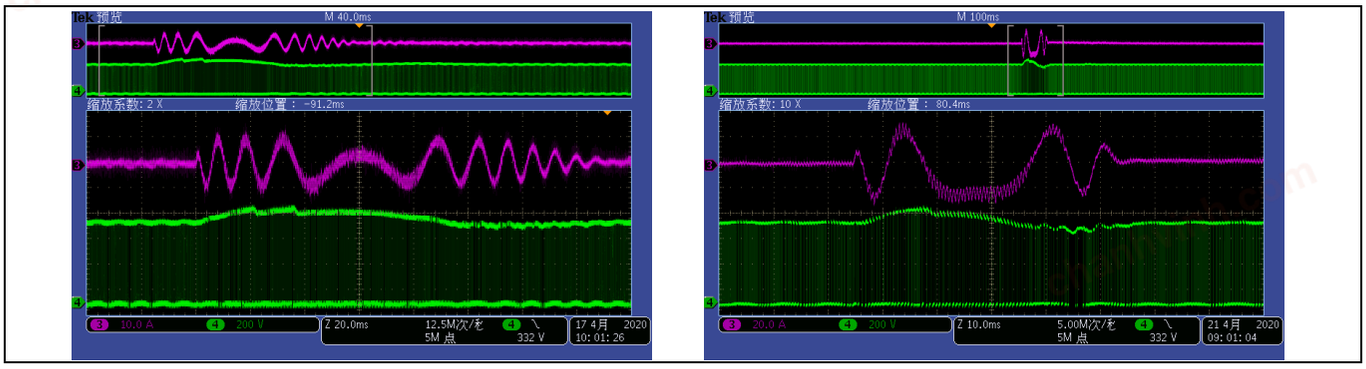

Figure 12 **Experimental waveform of acceleration and deceleration (from +1500rpm to -1500rpm) (CH3: AC line current, CH4: Vds of SiC-MOSFET)**

chanhvinh.com

5 References and appendices

[1] AN2018-01 EVAL-M1-101T User Manual

[2] IMBG120R045M1H datasheet

chanhvinh.com

chanhvinh.com

Revision history

Document version	Date of release	Description of changes
1.0	2020-11-15	Initial version

chanhvinh.com

Trademarks
All referenced product or service names and trademarks are the property of their respective owners.

Edition 2020-11-15

Published by

Infineon Technologies AG

81726 Munich, Germany

© 2020 Infineon Technologies AG. All Rights Reserved.

Do you have a question about this document?

Email: erratum@infineon.com

Document reference
UG 2020-32

For further information on the product, technology, delivery terms and conditions and prices please contact your nearest Infineon Technologies office (**www.infineon.com**).

WARNINGS
Due to technical requirements products may contain dangerous substances. For information on the types in question please contact your nearest Infineon Technologies office.

Except as otherwise explicitly approved by Infineon Technologies in a written document signed by authorized representatives of Infineon Technologies, Infineon Technologies' products may not be used in any applications where a failure of the product or any consequences of the use thereof can reasonably be expected to result in personal injury.