chanhvinh.com

KP212K1409

Analog Absolute Pressure Sensor

AEC Qualified RoHS

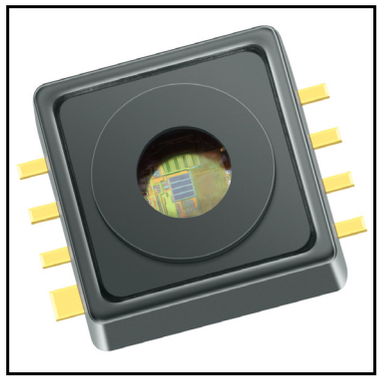

Features

- High precision pressure sensing (± 1.0 kPa)
- Ratiometric analog output
- Large temperature range (-40 °C to 125 °C)
- Broken wire detection
- Clamping
- “Green” 8 pin SMD housing
- Automotive qualified

Applications

The KP212K1409 is defined for use in following target applications:

- Two wheeler applications (manifold air pressure measurement)
- Industrial control
- Consumer application
- Medical application

Description

The KP212K1409 is a miniaturized Analog Manifold Air Pressure Sensor IC based on a capacitive principle. It is surface micromachined with a monolithic integrated signal conditioning circuit implemented in BiCMOS technology.

The sensor converts a pressure into an analog output signal. The calibrated transfer function converts a pressure of 15 kPa to 115 kPa into a voltage range of 0.5 V to 4.5 V.

The chip is packaged in a “green” SMD housing. The sensor has been primarily developed for measuring manifold air pressure, but can also be used in other application fields. The high accuracy and the high sensitivity of the device makes it a perfect fit for advanced automotive applications as well as in industrial and consumer applications.

Type	Package	Ordering Code	Marking
KP212K1409	PG-DSOF-8-16	SP005435491	KP212K1409

chanhvinh.com

Table of Contents

Features **1**
Applications **1**
Description **1**
Table of Contents **2**
1 Functional Description **3**
1.1 Pin Configuration 4
1.2 Pin Description 4
1.3 Block Diagram 5
1.4 Transfer Function 6
1.5 Accuracy 7
1.5.1 Ratiometric Error 7
1.5.2 Overall Accuracy 7
1.6 Output Voltage versus Load 9
1.7 Timing Properties 10
2 Specification **11**
2.1 Application Circuit Example 11
2.2 Absolute Maximum Ratings 12
2.3 Operating Range 13
2.4 Characteristics 14
3 Package Information **16**
3.1 PG-DSOF-8-16 Outline 16
3.2 Identification Code 17
4 Revision history **18**

chanhvinh.com

1 Functional Description

The pressure is detected by an array of capacitive surface micromachined sensor cells. The sensor cell output is amplified, temperature compensated and linearized to obtain an output voltage that is proportional to the applied pressure.
The transfer function for linearization is computed in the digital part of the sensor using a third order polynomial calculation. The transfer function is created from the following parameters:

- Minimum and maximum rated pressure
- Voltage level at minimum and maximum rated pressure
- Clamping levels

The output is analog and ratiometric with respect to the supply voltage.
All parameters needed for the complete calibration algorithm — such as offset, gain, temperature coefficients of offset and gain, and linearization parameters — are determined after assembly. The parameters are stored in an integrated E²PROM. The E²PROM content is protected with forward error correction (a one bit error is detected and corrected, errors of more than one bit are detected and the output signal is switched to ground potential).

Clamping

The output voltage is limited internally to two clamping threshold levels. Based on this feature, the open bond detection (OBD) is simplified and improved.

Open Bond Detection

The open bond detection, in conjunction with the clamping levels, eases the implementation of error and malfunction detection strategies (e.g. for On-Board Diagnosis requirements). The microcontroller can sample the output of the sensor and compare it with programmed overvoltage and undervoltage limits. When the sensor's output voltage exceeds those limits, a broken wire condition is identified.
When the chip is not powered properly, the JFET transistors of the broken wire detection stage are self-conducting. For example, if the GND connection is interrupted, the output is drawn strongly to VDD. Similarly, if the VDD connection is broken, the output is drawn to GND.

chanhvinh.com

1.1 Pin Configuration

Figure 1 shows the pin configuration.

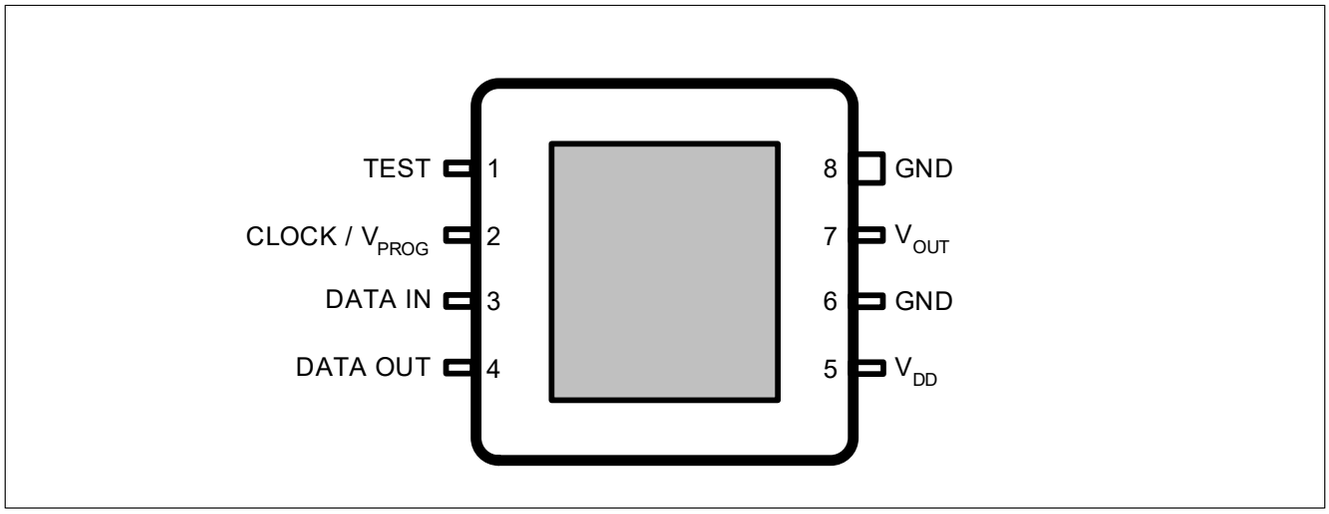

Figure 1 Pin configuration (top view, figure not to scale)

1.2 Pin Description

Table 1 shows the pin description.

Table 1 Pin Description

Pin No.	Name	Function
1	TEST	Test pin[1)]
2	CLOCK / V_{PROG}	External clock for communication / programming voltage[1)]
3	DATA IN	Serial data input pin[1)]
4	DATA OUT	Serial data output pin[1)]
5	V_{DD}	Supply voltage
6	GND	Circuit ground potential[2)]
7	V_{OUT}	Analog pressure signal output
8	GND	Circuit ground potential[2)]

1) Digital pins are used only during calibration and test. It is recommended to leave these pins floating (in case of an open GND connection, the floating pins prevent from a cross grounding through the corresponding ESD diodes).

2) It is recommended to connect both GND pins.

chanhvinh.com

1.3 Block Diagram

Figure 2 shows the functional block diagram.

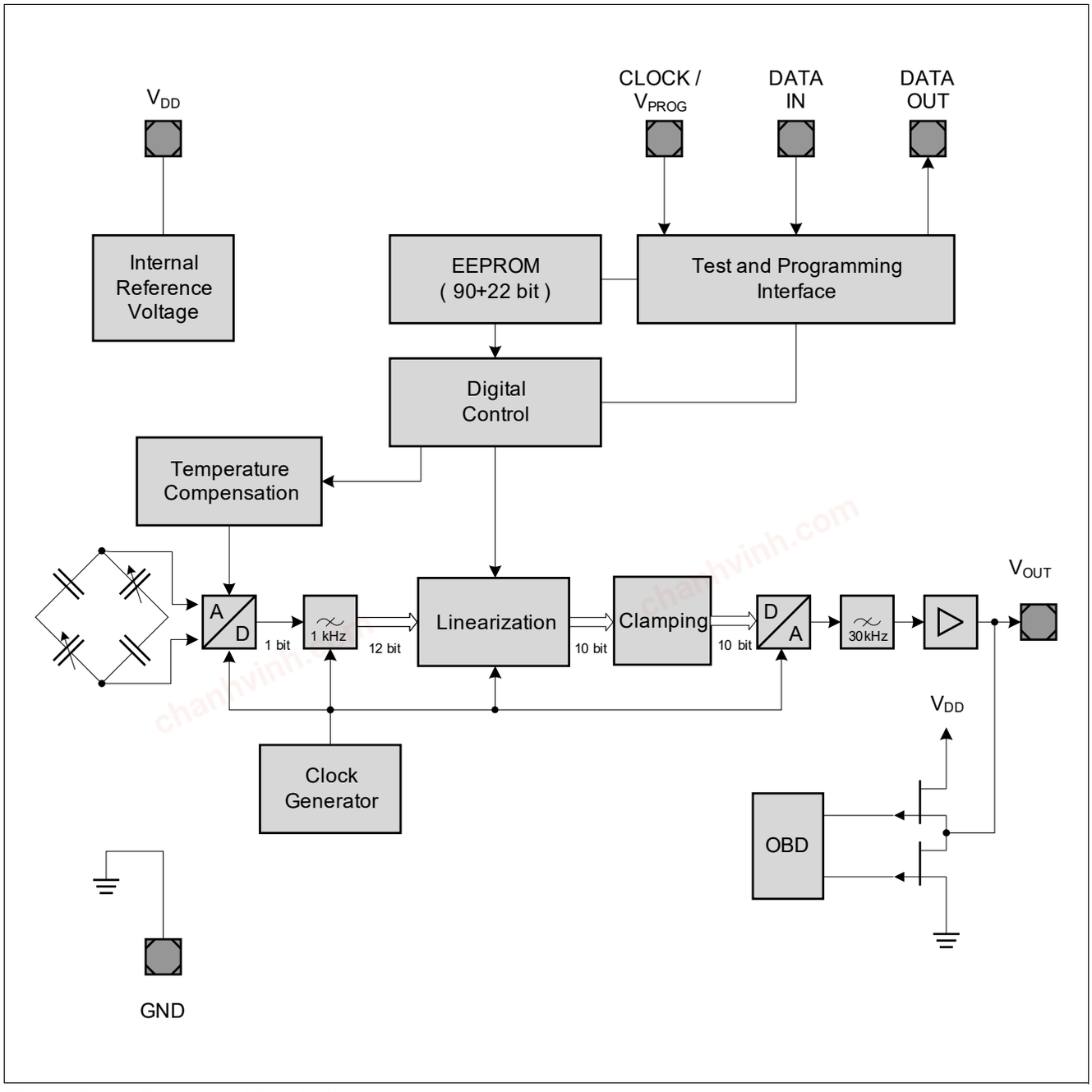

Figure 2 Functional block diagram

chanhvinh.com

1.4 Transfer Function

The KP212K1409 device is fully calibrated on delivery. The sensor has a linear transfer function between the applied pressure and the output signal:

$$V_{OUT} = V_{DD} \times (a \times P + b)$$

The output signal is ratiometric. Gain **a** and offset **b** are determined during calibration in order to generate the required transfer function.

Calibrated Transfer Function

The following calibration is adjusted with the parameters **a** and **b:**

Table 2 Transfer function

Pressure			Output Voltage @ $V_{DD} = V_{DD,Typ}$				Gain and Offset		
Symbol	**Values**	**Unit**	**Symbol**	**Values**	**Unit**		**Symbol**	**Value**	**Unit**
$p_{IN,1}$	15	kPa	$V_{OUT,1}$	0.5	V		*a*	0.00800	1/kPa
$p_{IN,2}$	115	kPa	$V_{OUT,2}$	4.5	V		*b*	-0.02000	–

Note: The points $p_{IN,1}/V_{OUT,1}$ and $p_{IN,2}/V_{OUT,2}$ define the calibrated transfer function and not the operating range. The operating pressure range is defined by the parameter 2.4 ***"Ambient operating pressure range" on Page 13*** *.*

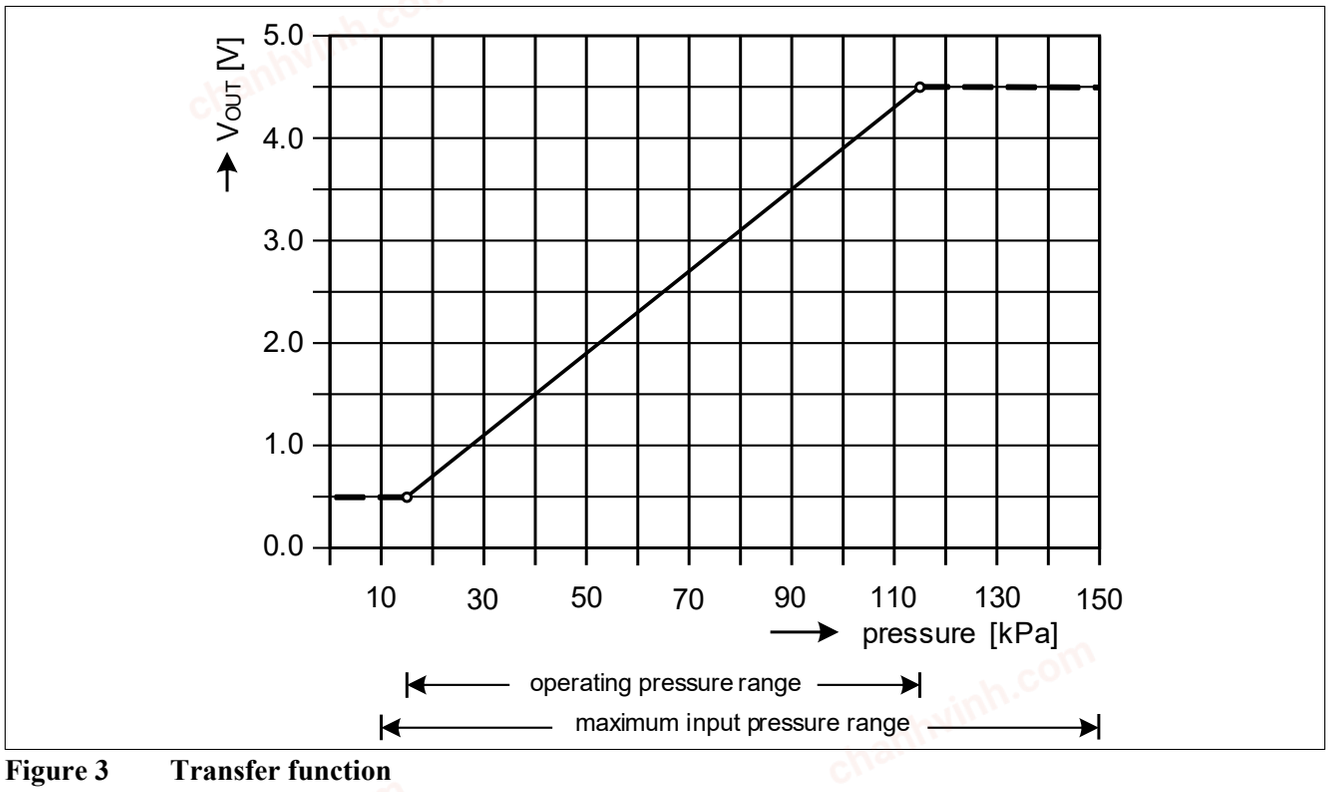

Figure 3 Transfer function

Note: The application circuitry determines the current driven by the device and thus may have an impact on the output voltage delivered by the sensor.

chanhvinh.com

1.5 Accuracy

The accuracy of the KP212K1409 sensor is influenced by the supply voltage (ratiometric error) as well as by pressure, temperature and aging effects. The specified value, calculated with the transfer function, represents the theoretical value (see **Figure 3**). The error equals the deviation between the measured output voltage value and the specified output voltage value.

1.5.1 Ratiometric Error

Ideally the sensor is ratiometric - the output (V_{OUT}) scales by the same ratio that V_{DD} increases or decreases. The ratiometric error is defined as the difference between the ratio that V_{DD} changed and the ratio that V_{OUT} changed, expressed as a percentage.

$$E_{RAT}(\%) = \frac{V_{OUT}(@V_{DD}) - V_{OUT}(@5V) \times \frac{V_{DD}}{5V}}{5V} \times 100\%$$

The output voltage V_{OUT} is ratiometric to V_{DD}. V_{DD} must be in the operating range provided in **Table 7**.

Table 3 Ratiometric Error

Supply voltage (V)	Max. ratiometric error (E_{RAT} in % of $V_{DD, Typ}$)
VDD,Min	± 0.5
VDD,Typ	0
VDD,Max	± 0.5

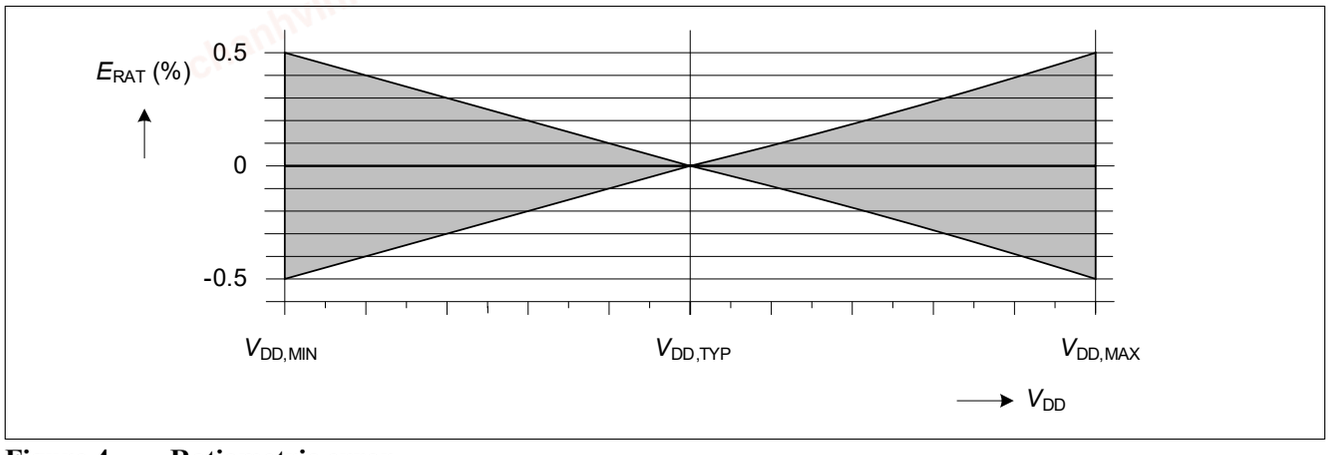

Figure 4 Ratiometric error

1.5.2 Overall Accuracy

Overall accuracy covers the entire pressure and temperature range from different sources of error including the following:

- **Pressure:**

Output deviation from target transfer function over the specified pressure range

- **Temperature:**

Output deviation over the temperature range

- **Aging:**

Parameter drift over life time

chanhvinh.com

Note: Ratiometric signal error is not included in the overall accuracy. For error measurements, the supply voltage must have the nominal value ($V_{DD} = V_{DD,Typ}$).

The error band is determined by three continuous lines through four relevant breakpoints.

Table 4 Accuracy

Temperature [°C]	Error [kPa]	Error Multiplier
-40	±2.0	2.0
0	±1.0	1.0
85	±1.0	1.0
125	±2.0	2.0

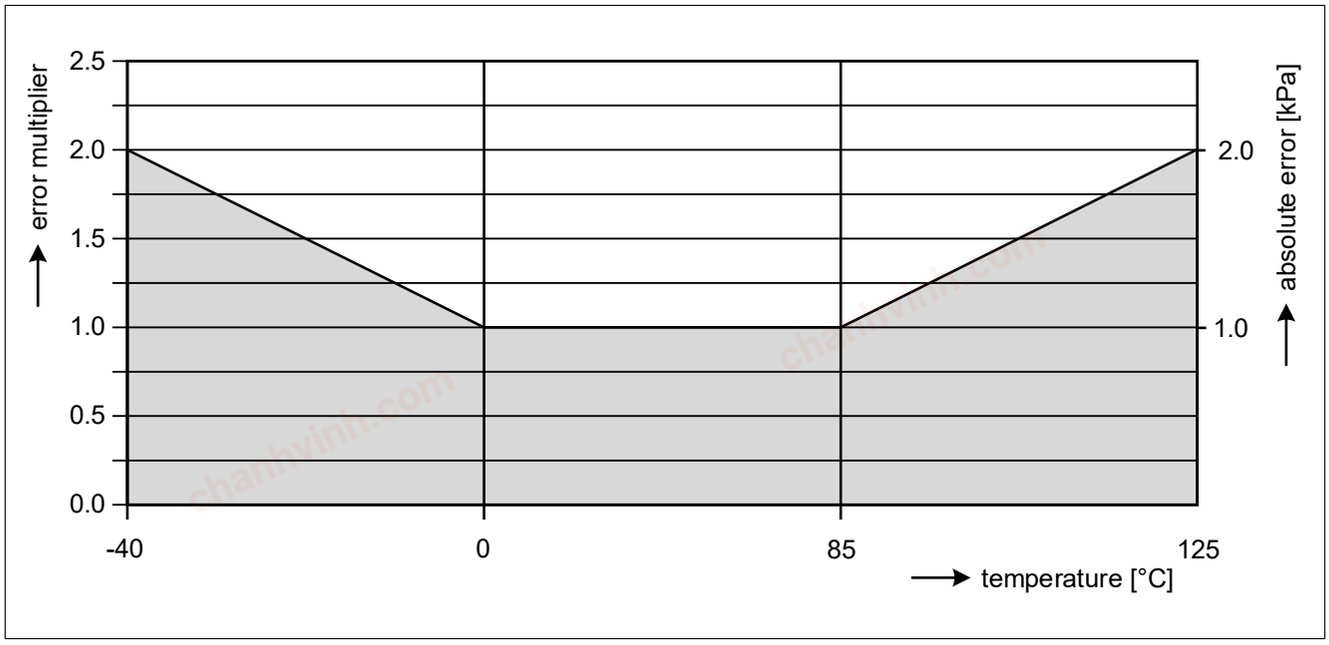

Figure 5 Accuracy for pressure acquisition

chanhvinh.com

1.6 Output Voltage versus Load

The output voltage limits depend on:

- The value of the external load resistor.
- The type of connection (pull-up or pull-down).

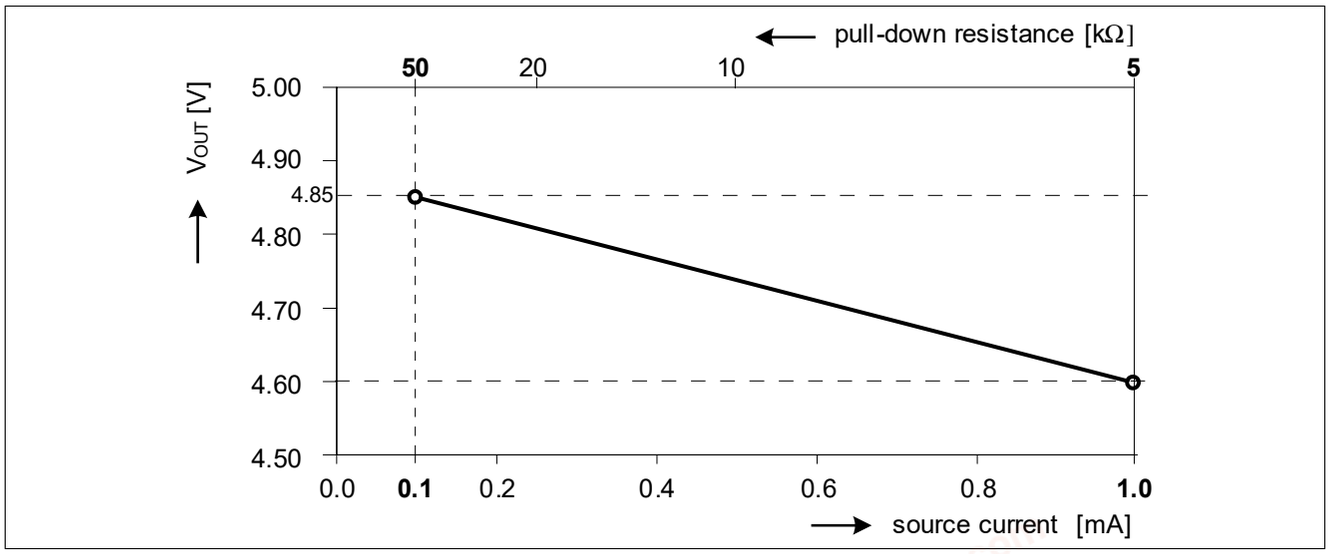

Figure 6 Maximum output voltage limit with pull-down load

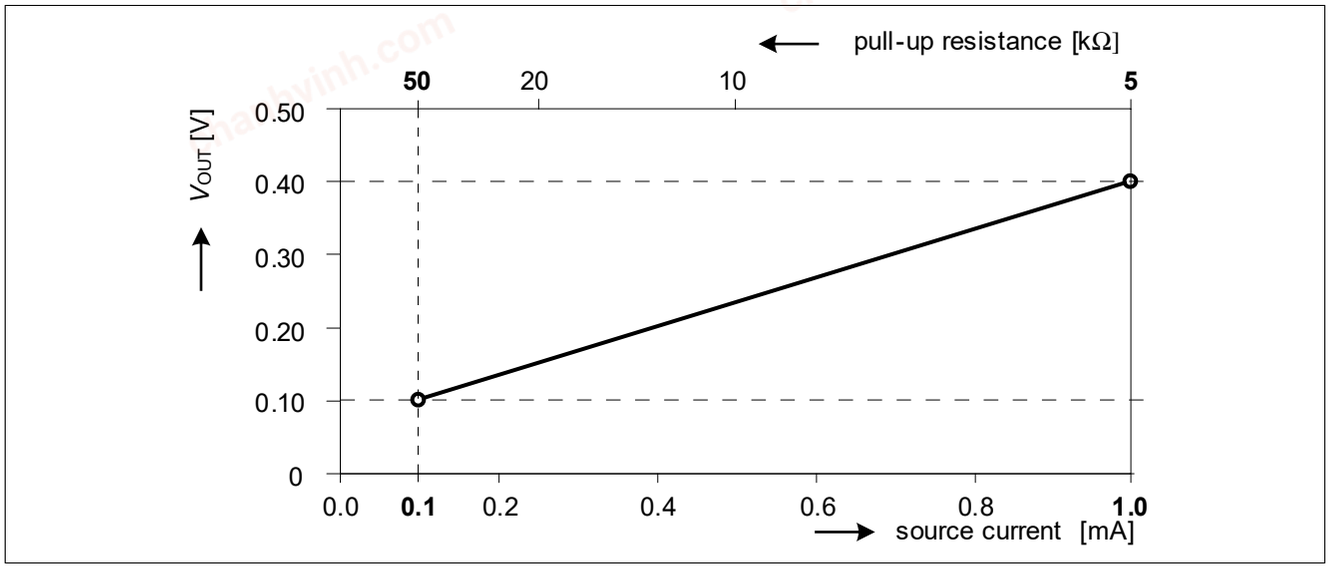

Figure 7 Minimum output voltage limit with pull-up load

Note: The values in the diagrams are valid for the entire specified temperature range.
The two diagrams above do not take into account clamping levels. In case clamping levels are implemented, the output voltage is clamped accordingly.

chanhvinh.com

1.7 Timing Properties

Power-up Time

The power-up time t_{UP} is defined as the maximum time between the supply voltage reaching its operating range and the output voltage reaching 90% of its final value (assuming pin V_{OUT} open and constant input pressure).

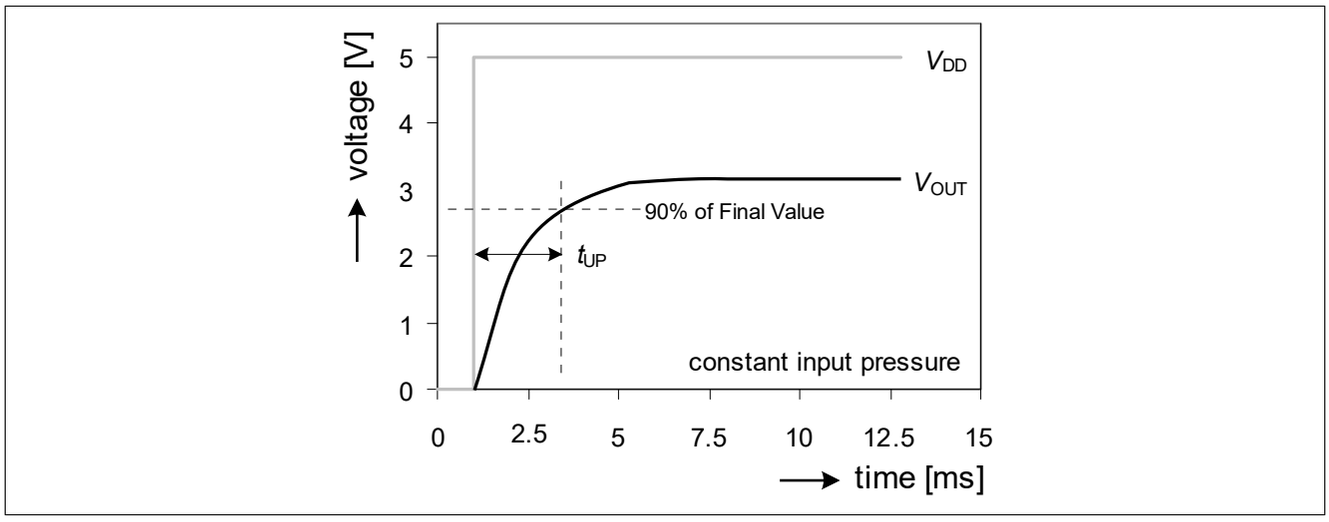

Figure 8 Power-up time

Response Time and Stabilization Time

The response time t_R is defined as the time required by the output to change from 10% to 90% of its final value after a specified pressure step (assuming pin V_{OUT} open).

The stabilization time t_S is defined as the time required by the output to meet the specified accuracy after the pressure has been stabilized (assuming pin V_{OUT} open).

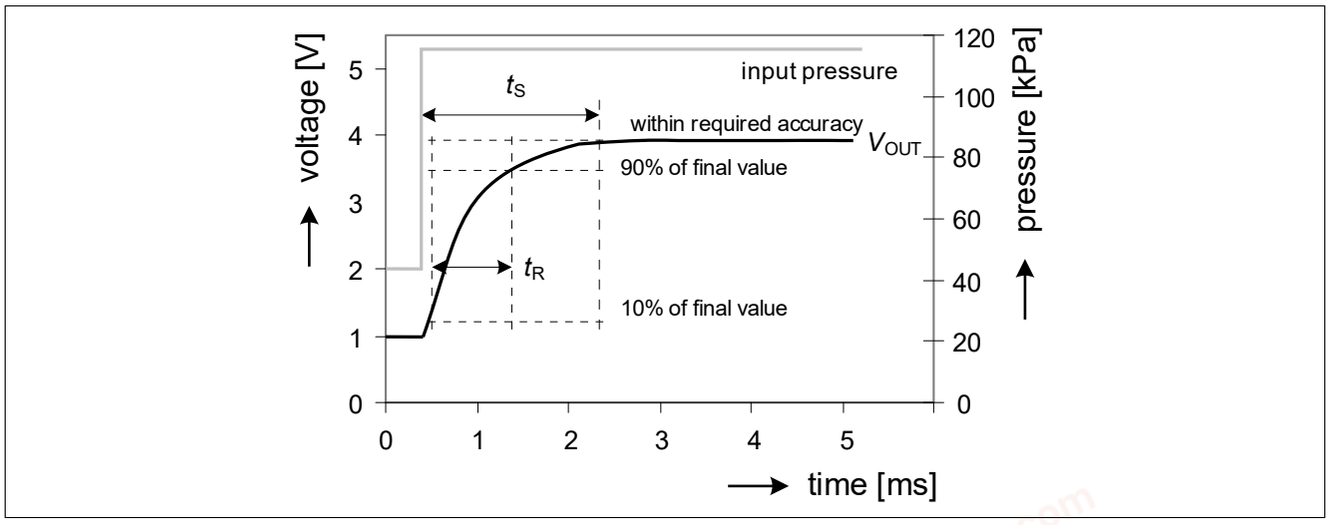

Figure 9 Response and stabilization time

Note: The values in the diagrams are valid for the entire specified temperature range.

chanhvinh.com

2 Specification

2.1 Application Circuit Example

It is recommended to protect the pressure sensor IC against overload and electro-magnetic interferences (as shown in **Figure 10**.

The output circuit acts as a low-pass decoupling filter between the sensor IC output and the A/D input of the microcontroller.

The shown application circuit example considers an increased cable length between the sensor and the microcontroller. A combined location on a PCB with reduced distance between the sensor and the controller allows a reduction of the numbers of the passive components (e.g. C_2, R_1 and R_2 can be omitted).

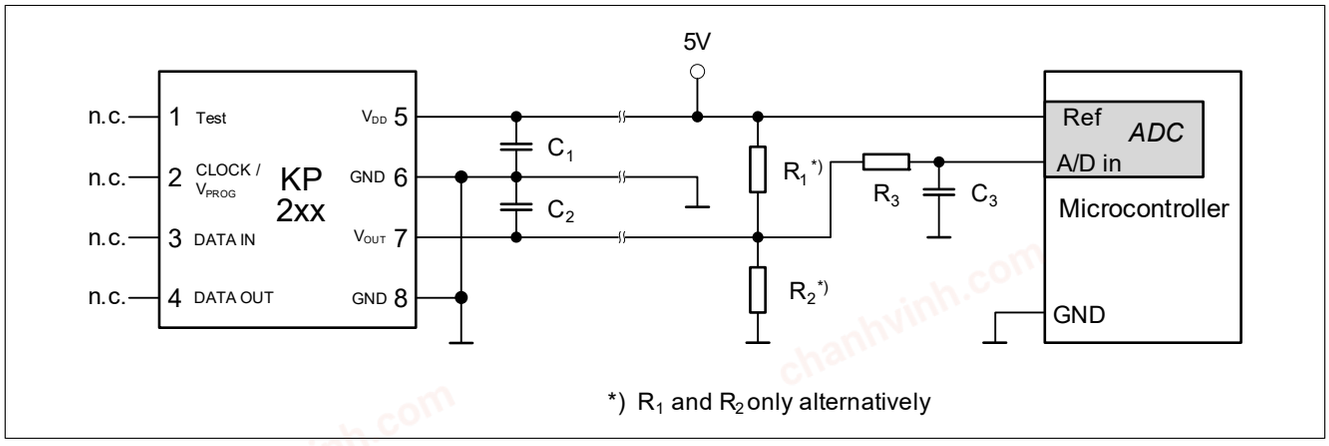

Figure 10 Application circuit example

Note: It is recommended to leave the digital pins CLOCK/V_{PROG}, DATA IN and DATA OUT floating (in case of an open GND connection, the floating pins prevent from a cross grounding through the corresponding ESD diodes).

Table 5 Component Values

Component	Symbol	Values			Unit
		Min.	Typ.	Max.	
Pull-Up Resistor	R_1	5	59	100	kΩ
Pull-Down Resistor	R_2	5	59	100	kΩ
Low Pass Resistor	R_3	3.9	22	100	kΩ
Supply Blocking Capacitor	C_1	10	100	100	nF
Output Blocking Capacitor	C_2	0	100	100	nF
Low Pass Capacitor	C_3	10	100	100	nF

chanhvinh.com

2.2 Absolute Maximum Ratings

Table 6 Absolute Maximum Ratings

Parameter	Symbol	Values			Unit	Note or Test Condition	Number
		Min.	Typ.	Max.			
Supply voltage	V_{DD_max}	-0.3 – -6.5[1)]	– – –	6.5 16.5 –	V V V	– 1 h @ 70°C Limited time: Max. 300 s	1.1
Output voltage	V_{OUT}	-0.3	–	VDD + 0.3	V	–	1.2
Voltage on CLOCK / V_{PROG} pin	V_{CLK}	–	–	20	V	–	1.3
Voltage on DATA IN & DATA_OUT pins	V_{DATA}	–	–	5	V	–	1.4
Storage temperature	T_S	-60	–	150	°C	–	1.5
Thermal resistance	R_{thJA}	–	–	180	K/W	Thermal resistance between the die and ambient; according to JESD51-2	1.6
Maximum input pressure	p_{amb_max}	10	–	150 600	kPa kPa	 Limited time: Max. 300 s	1.7
ESD robustness (HBM: 1.5 kΩ, 100 pF)	V_{ESD}	–	–	2	kV	According to EIA / JESD22-A114-E	1.8

1) Reverse polarity; $I_{DD} < 300$ mA

Attention: ***Stresses above the max. values listed in Table 6 may cause permanent damage to the device. Exposure to absolute maximum rating conditions for extended periods may affect device reliability. Maximum ratings are absolute ratings; exceeding only one of these values may cause irreversible damage to the integrated circuit.***

chanhvinh.com

2.3 Operating Range

The following operating conditions must not be exceeded in order to ensure correct operation of the device. All parameters specified in the following sections refer to these operating conditions, unless noted otherwise.

Table 7 Operating Range

Parameter	Symbol	Values			Unit	Note or Test Condition	Number
		Min.	Typ.	Max.			
Supply voltage	V_{DD}	4.5	5.0	5.5	V	VOUT is ratiometric to V_{DD}	2.1
Output current on V_{OUT} pin	I_{OUT}	– -1	– –	1 –	mA mA	pull-down resistor used pull-up resistor used	2.2
Operating temperature	T_a	-40	–	125	°C		2.3
Ambient operating pressure range	p_{amb}	15	–	115	kPa		2.4
Lifetime[1)]	t_{live}	15	–	–	years		2.5

1) The life time shall be considered as anticipation with regard to the product that shall not extend the agreed warranty period.

chanhvinh.com

2.4 Characteristics

Table 8 Electrical Characteristics

Parameter	Symbol	Values			Unit	Note or Test Condition	Number
		Min.	Typ.	Max.			
Output voltage range	V_{OUT_R}	0.10	–	4.85	V	See also section **"Output Voltage versus Load" on Page 9**	3.1
Supply current	I_{DD}	–	8	10	mA	During power up a peak supply current of max. 22 mA is possible	3.2
Output referred noise	V_{NOISE}	– –	– –	2.5 1.8	mV_{RMS} mV_{RMS}	Frequency > 1 kHz[1)] Frequency < 1 kHz	3.3
Response time[2)]	t_R	–	0.65	1.0[3)]	ms	10% to 90% of the final output value	3.4
Stabilization time[2)]	t_S	–	–	10	ms	For full accuracy	3.5
Power-up time[2)]	t_{UP}	–	–	5	ms	90% of the final output value	3.6
Broken wire: Diagnosis response time[4)]	t_{OBD}	–	–	1	ms		3.7
OBD transistor on resistance	R_{DSON}	–	–	160	Ω		3.8

1) 200 measurements in sequence, bandwidth limited to 40kHz
2) More details in section **"Timing Properties" on Page 10**
3) The maximum response time considers a maximal value of 100nF for the output blocking capacitor C_2 and a maximum pressure pulse equivalent 4.0V output change
4) In the event of a broken wire (broken VDD line or broken GND line), the output changes to certain voltage levels within the broken wire response time. The OBD ranges are determined by the application circuitry

chanhvinh.com

Specification

Table 9 Transfer Function

Parameter	Symbol	Values			Unit	Note or Test Condition	Number
		Min.	Typ.	Max.			
Sensitivity	S	–	40.0	–	mV /kPa		4.1
Accuracy pressure (overall)[1]	acc_p	-1.0 -2.0 -2.0	– – –	1.0 2.0 2.0	kPa kPa kPa	0°C up to 85 °C @ -40°C @ 125°C	4.2
Ratiometric error[2]	E_{RAT}	-25	–	25	mV		4.3
Lower clamping level	V_{Cl_low}	–	0.5	–	V		4.4
Upper clamping level	V_{Cl_high}	–	4.5	–	V		4.5
Clamping level error	ΔV_{Cl}	-30	–	30	mV	Accuracy of lower and upper clamping level	4.6

1) More details in section **“Overall Accuracy” on Page 7**

2) More details in section **“Ratiometric Error” on Page 7**

chanhvinh.com

3 Package Information

For passivation the sensor is covered with a transparent gel. The PG-DSOF-8-16 package is optimized regarding external mechanical stress influences. The package fulfills the solder conditions for lead-free board assembly.

3.1 PG-DSOF-8-16 Outline

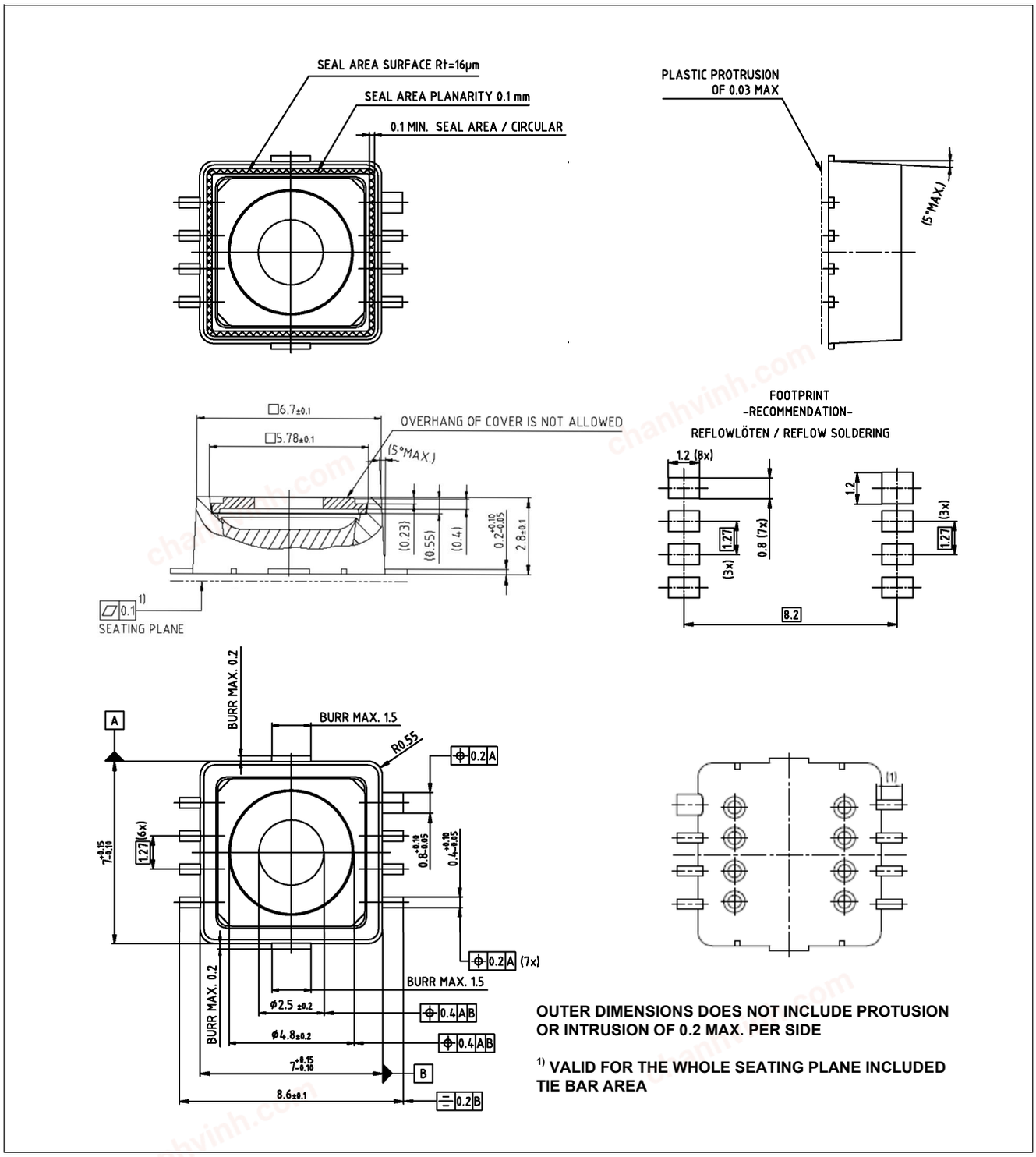

Figure 11 Package outline

chanhvinh.com

Green Product (RoHS compliant)

To meet the world-wide customer requirements for environmentally friendly products and to be compliant with government regulations the device is available as a green product. Green products are RoHS-Compliant (i.e Pb-free finish on leads and suitable for Pb-free soldering according to IPC/JEDEC J-STD-020).

3.2 Identification Code

The identification code is provided in a machine readable format. The date and sales code are provided in human readable format.

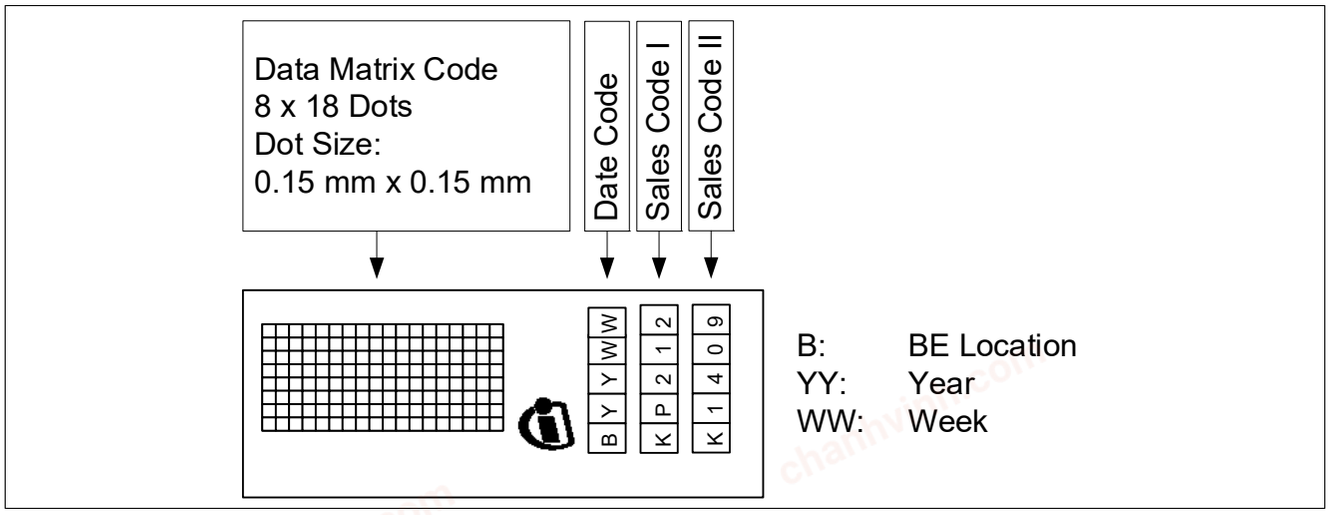

Figure 12 Identification code

The identification code for the KP212K1409 is on the same side of the package as pin 8 (GND).

chanhvinh.com

4 Revision history

Revision	Date	Changes
1.0	2020-07-08	

chanhvinh.com

Trademarks of Infineon Technologies AG

µHVIC™, µIPM™, µPFC™, AU-ConvertIR™, AURIX™, C166™, CanPAK™, CIPOS™, CIPURSE™, CoolDP™, CoolGaN™, COOLiR™, CoolMOS™, CoolSET™, CoolSiC™, DAVE™, DI-POL™, DirectFET™, DrBlade™, EasyPIM™, EconoBRIDGE™, EconoDUAL™, EconoPACK™, EconoPIM™, EiceDRIVER™, eupec™, FCOS™, GaNpowIR™, HEXFET™, HITFET™, HybridPACK™, iMOTION™, IRAM™, ISOFACE™, IsoPACK™, LEDrivIR™, LITIX™, MIPAQ™, ModSTACK™, my-d™, NovalithIC™, OPTIGA™, OptiMOS™, ORIGA™, PowIRaudio™, PowIRStage™, PrimePACK™, PrimeSTACK™, PROFET™, PRO-SIL™, RASIC™, REAL3™, SmartLEWIS™, SOLID FLASH™, SPOC™, StrongIRFET™, SupIRBuck™, TEMPFET™, TRENCHSTOP™, TriCore™, UHVIC™, XHP™, XMC™.

Trademarks updated November 2015

Other Trademarks

All referenced product or service names and trademarks are the property of their respective owners.

Edition 2020-07-08
Published by
Infineon Technologies AG
81726 Munich, Germany

© 2020 Infineon Technologies AG.
All Rights Reserved.

Do you have a question about any aspect of this document?

Email: erratum@infineon.com

IMPORTANT NOTICE

The information given in this document shall in no event be regarded as a guarantee of conditions or characteristics ("Beschaffenheitsgarantie").

With respect to any examples, hints or any typical values stated herein and/or any information regarding the application of the product, Infineon Technologies hereby disclaims any and all warranties and liabilities of any kind, including without limitation warranties of non-infringement of intellectual property rights of any third party.

In addition, any information given in this document is subject to customer's compliance with its obligations stated in this document and any applicable legal requirements, norms and standards concerning customer's products and any use of the product of Infineon Technologies in customer's applications.

The data contained in this document is exclusively intended for technically trained staff. It is the responsibility of customer's technical departments to evaluate the suitability of the product for the intended application and the completeness of the product information given in this document with respect to such application.

For further information on technology, delivery terms and conditions and prices, please contact the nearest Infineon Technologies Office (**www.infineon.com**).

WARNINGS

Due to technical requirements products may contain dangerous substances. For information on the types in question please contact your nearest Infineon Technologies office.

Except as otherwise explicitly approved by Infineon Technologies in a written document signed by authorized representatives of Infineon Technologies, Infineon Technologies' products may not be used in any applications where a failure of the product or any consequences of the use thereof can reasonably be expected to result in personal injury.