chanhvinh.com

EZ-USB™ FX5N DVK (KIT_FX5N_FMC_001) kit guide

About this document

Scope and purpose

The EZ-USB™ FX5N DVK (KIT_FX5N_FMC_001) kit enables the development of applications based on EZ-USB™ FX5N USB 3.2 Gen 1x2 device controller (CYUSB3284-BZXI) for streaming video and audio seamlessly to the USB host using the off-the-shelf FPGA add-on board and camera modules.

Intended audience

This document is intended for the EZ-USB™ FX5N DVK (KIT_FX5N_FMC_001) kit users.

chanhvinh.com

Important notice

“Evaluation Boards and Reference Boards” shall mean products embedded on a printed circuit board (PCB) for demonstration and/or evaluation purposes, which include, without limitation, demonstration, reference and evaluation boards, kits and design (collectively referred to as “Reference Board”).

Environmental conditions have been considered in the design of the Evaluation Boards and Reference Boards provided by Infineon Technologies. The design of the Evaluation Boards and Reference Boards has been tested by Infineon Technologies only as described in this document. The design is not qualified in terms of safety requirements, manufacturing and operation over the entire operating temperature range or lifetime.

The Evaluation Boards and Reference Boards provided by Infineon Technologies are subject to functional testing only under typical load conditions. Evaluation Boards and Reference Boards are not subject to the same procedures as regular products regarding returned material analysis (RMA), process change notification (PCN) and product discontinuation (PD).

Evaluation Boards and Reference Boards are not commercialized products, and are solely intended for evaluation and testing purposes. In particular, they shall not be used for reliability testing or production. The Evaluation Boards and Reference Boards may therefore not comply with CE or similar standards (including but not limited to the EMC Directive 2004/EC/108 and the EMC Act) and may not fulfill other requirements of the country in which they are operated by the customer. The customer shall ensure that all Evaluation Boards and Reference Boards will be handled in a way which is compliant with the relevant requirements and standards of the country in which they are operated.

The Evaluation Boards and Reference Boards as well as the information provided in this document are addressed only to qualified and skilled technical staff, for laboratory usage, and shall be used and managed according to the terms and conditions set forth in this document and in other related documentation supplied with the respective Evaluation Board or Reference Board.

It is the responsibility of the customer’s technical departments to evaluate the suitability of the Evaluation Boards and Reference Boards for the intended application, and to evaluate the completeness and correctness of the information provided in this document with respect to such application.

The customer is obliged to ensure that the use of the Evaluation Boards and Reference Boards does not cause any harm to persons or third party property.
The Evaluation Boards and Reference Boards and any information in this document is provided "as is" and Infineon Technologies disclaims any warranties, express or implied, including but not limited to warranties of non-infringement of third party rights and implied warranties of fitness for any purpose, or for merchantability.

Infineon Technologies shall not be responsible for any damages resulting from the use of the Evaluation Boards and Reference Boards and/or from any information provided in this document. The customer is obliged to defend, indemnify and hold Infineon Technologies harmless from and against any claims or damages arising out of or resulting from any use thereof.

Infineon Technologies reserves the right to modify this document and/or any information provided herein at any time without further notice.

chanhvinh.com

Safety precautions

Note: *Please note the following warnings regarding the hazards associated with development systems.*

Table 1 Safety precautions

	**Caution:** *The evaluation or reference board contains parts and assemblies sensitive to electrostatic discharge (ESD). Electrostatic control precautions are required when installing, testing, servicing or repairing the assembly. Component damage may result if ESD control procedures are not followed. If you are not familiar with electrostatic control procedures, refer to the applicable ESD protection handbooks and guidelines.*

chanhvinh.com

Table of contents

About this document **1**
Important notice **2**
Safety precautions **3**
Table of contents **4**
1 Introduction **5**
1.1 DVK contents 5
1.2 Download kit documents and hardware design files 6
1.3 EZ-USB™ FX5N baseboard details 6
1.4 EZ-USB™ FX5N baseboard features 7
2 Installing the kit software **8**
3 KIT_FX5N_FMC_001 system design **9**
3.1 Top-level hardware design 9
3.2 KIT_FX5N_FMC_001 EZ-USB™ FX5N DVK design details 10
3.2.1 EZ-USB™ FX5N DVK 10
3.2.1.1 USB-C SS connector (J2) 10
3.2.1.2 Mode selection switch (SW2) 10
3.2.1.3 Power supply 11
3.2.1.4 EZ-USB™ FX5N (U1) 11
3.2.1.5 QSPI flash (U6, U7) 11
3.2.1.6 FMC HPC mezzanine connector (J8) 11
3.2.1.7 GPIO interface connector (J5) 12
3.2.1.8 USB-C Full-Speed connector (J3) 12
3.2.1.9 SWD header (J6) 12
3.2.1.10 Crystal (Y1) 12
3.2.1.11 LED (USER_LED, PWRON) 12
4 Programming the kit **13**
4.1 Program the user application 13
5 Run the application (internal color bar) **16**
5.1 Viewing the UVC output using windows camera application 16
5.2 Viewing the U3V output using eBus Player application 17
6 Troubleshooting **19**
6.1 EZ-USB™ FX5N programming test 19
References **20**
Glossary **21**
Revision history **22**
Disclaimer **23**

chanhvinh.com

1 Introduction

The EZ-USB™ FX5N DVK (KIT_FX5N_FMC_001) kit is based on the EZ-USB™ FX5N product family of Infineon's USB 10 Gbps device controllers.

EZ-USB™ FX5N is a family of USB 10 Gbps peripheral controllers targeting the next-generation USB applications in camera, video, imaging, and data acquisition markets. EZ-USB™ FX5N consists of dual Arm® Cortex®-M4 and M0+ core CPUs, 512 KB flash, 128 KB SRAM, 128 KB ROM, seven Serial Communication Blocks (SCBs), cryptography accelerator, and high-bandwidth data subsystem providing DMA data transfers between LVDS and USB ports at speeds up to 10 Gbps. An additional 1 MB SRAM is included in the high-bandwidth data subsystem to provide buffering for the USB data. EZ-USB™ FX5N also supports USB Type-C plug orientation detection and flip-mux function without the need for external logic. This kit is intended to be a solution demo kit for video and audio streaming applications from block camera to a PC via USB-C interface.

See the device datasheet to understand and compare the various features supported by EZ-USB™ FX5N controllers.

The EZ-USB™ FX5N DVK (KIT_FX5N_FMC_001) supports the following key features:

- Stream video and audio seamlessly to a USB host
- USB bus-powered and self-powered operation
- Onboard regulators

For EZ-USB™ FX5N controller details, see the EZ-USB™ FX5N kit webpage.

1.1 DVK contents

Table 2 lists the EZ-USB™ FX5N DVK (KIT_FX5N_FMC_001) contents.

Table 2 DVK contents

Item	Type	Comments
EZ-USB™ FX5N baseboard	Hardware	–
USB-C cable	Cable	This cable supports 10 Gbps in each lane. Hence it can be used for USB 3.2 Gen 1x2 applications
Hard copy of the quick-start guide (QSG)	Documentation	–
Kit casing	Package	–
Foam	Package	To protect and maintain proper placement in the kit container

chanhvinh.com

1.2 Download kit documents and hardware design files

Download the KIT_FX5N_FMC_001 kit documents and the hardware design files from the EZ-USB™ FX5N kit webpage. The documents include a quick start guide (QSG), kit user guide (this document), and release notes. The hardware design files include schematics, bill of materials (BOM), and layout files.

1.3 EZ-USB™ FX5N baseboard details

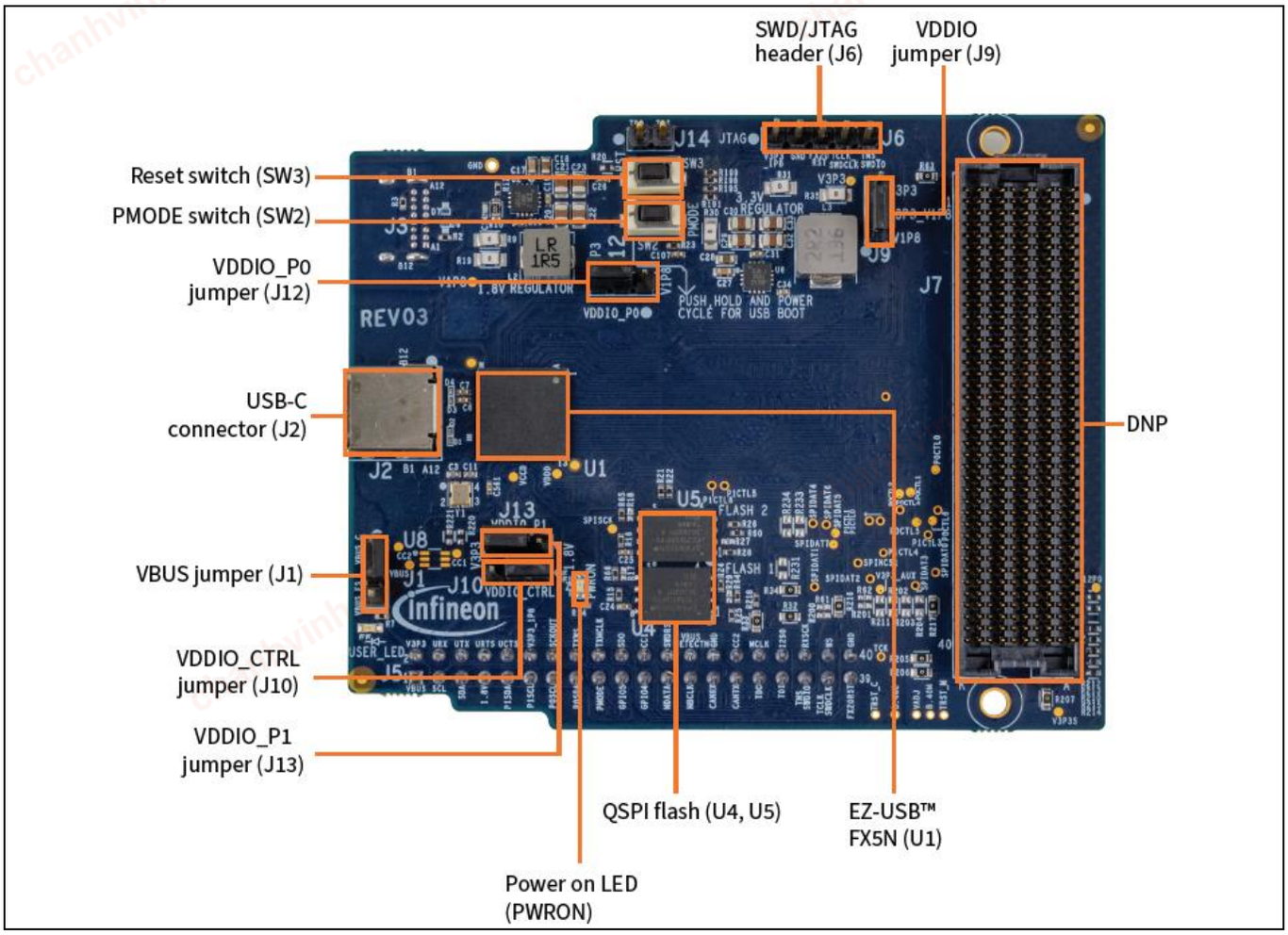

Figure 1 EZ-USB™ FX5N baseboard – top view

chanhvinh.com

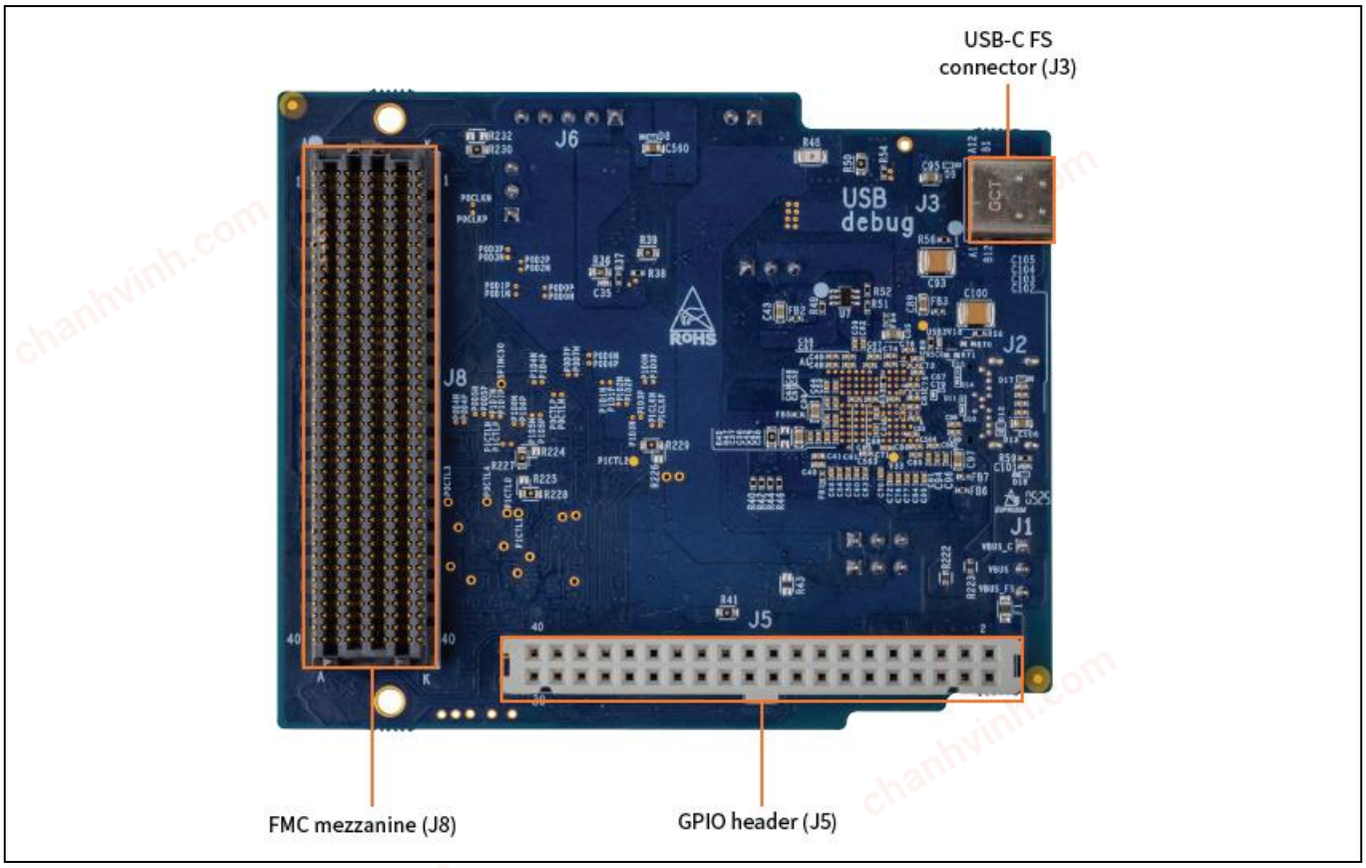

Figure 2 EZ-USB™ FX5N baseboard – bottom view

1.4 EZ-USB™ FX5N baseboard features

- EZ-USB™ FX5N controller
- Two QSPI SPI flash
- Onboard regulators: 1.8 V and 3.3 V DC-DC switching regulators
- Boot mode switch for selecting USB boot or SPI boot
- FMC-HPC mezzanine connector to interface EZ-USB™ FX5N DVK with FPGA boards
- 40-pin GPIO header for interfacing the GPIO accessory board (ASSY_GPIO_001)
- SS USB port for data transfers at speeds up to 10 Gbps
- FS USB port for data logging

chanhvinh.com

2 Installing the kit software

Download the EZ-USB™ FX5N SDK from the EZ-USB™ FX5N kit webpage.

Install the following software. The installation of the following software may require administrator privileges.

EZ-USB™ Control Center

Download and install the EZ-USB FX Control Center application from the webpage.

Pleora eBUS Player

For USB3Vision (U3V) video streaming, download and install Pleora eBUS Player:

- For Windows 64-bit
- For Windows 32-bit

chanhvinh.com

3 KIT_FX5N_FMC_001 system design

The EZ-USB™ FX5N baseboard is bus-powered and needs a USB-C cable to connect to the PC. To demonstrate the full functionality of the kit and FPGA, the add-on board must be connected to the EZ-USB™ FX5N DVK.

3.1 Top-level hardware design

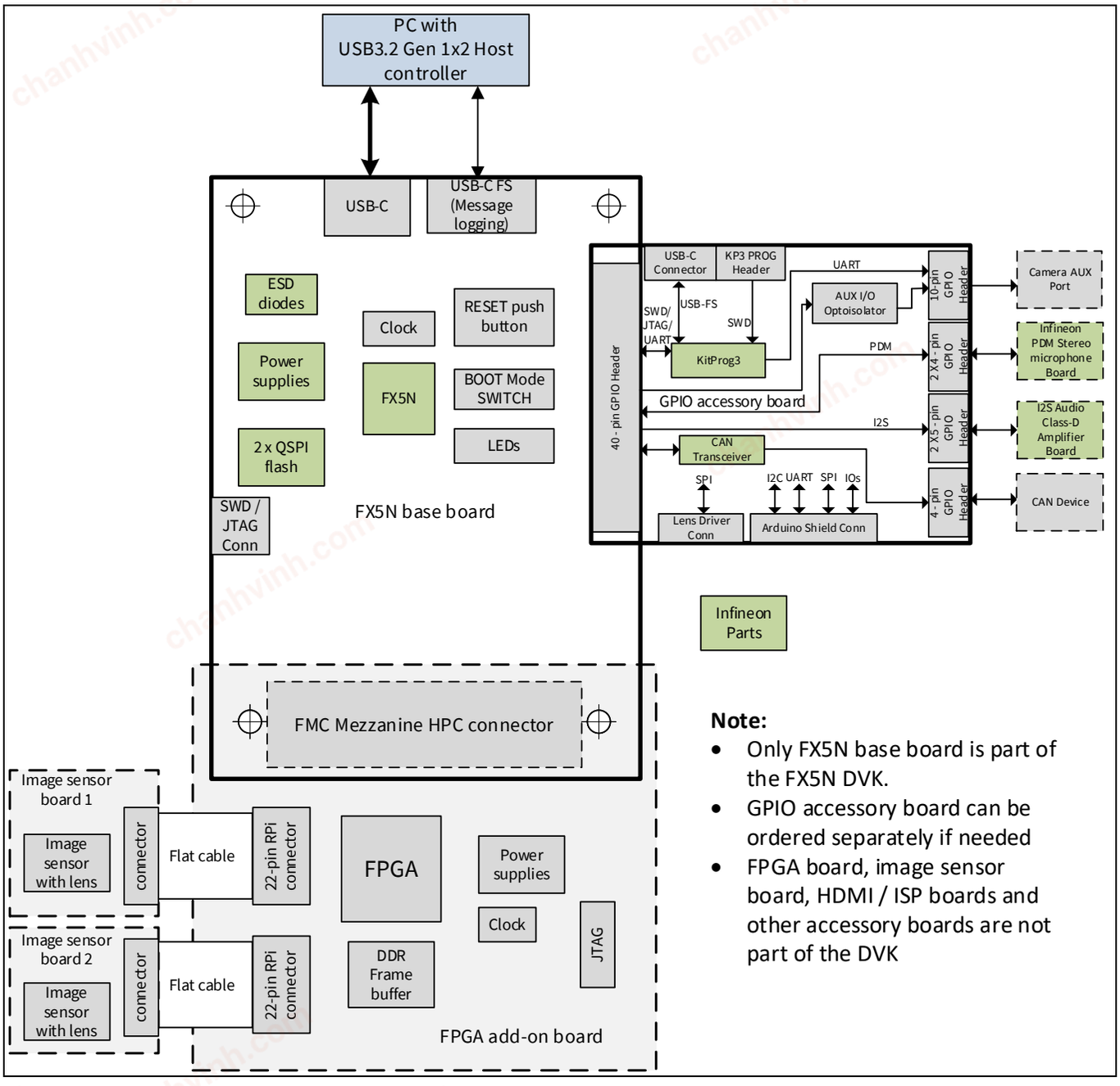

Figure 3 EZ-USB™ FX5N DVK block diagram

chanhvinh.com

3.2 KIT_FX5N_FMC_001 EZ-USB™ FX5N DVK design details

The KIT_FX5N_FMC_001 EZ-USB™ FX5N DVK consists of the following:

- EZ-USB™ FX5N silicon (CYUSB3284-BZXI)
- Two external QSPI Flash modules
- Power supplies
- 24 MHz crystal
- USB-C SS connector
- USB-C FS connector
- FMC HPC mezzanine connector to connect with the add-on FPGA board
- GPIO interface connector for GPIO accessory board

3.2.1 EZ-USB™ FX5N DVK

3.2.1.1 USB-C SS connector (J2)

The KIT_FX5N_FMC_001 kit is bus-powered and uses a USB-C SS connector to interface with the PC through the USB-C cable provided with the kit. The USB3 port of the PC will be able to source a maximum of 5 V at 3 A power through VBUS. The connector used in the DVK is USB-IF certified. This interface has TVS diodes for protection against ESD.

3.2.1.2 Mode selection switch (SW2)

This switch selects the mode in which EZ-USB™ FX5N must boot upon power-on. The kit can boot in two modes based on the position of this switch.

Table 3 Boot modes

Boot mode	SW2	Description
USB	ON	Hold the push button (SW2) and power cycle the KIT either by pressing and releasing the RESET button (SW3) or removing and reconnecting the USB-C cable
Internal flash memory	OFF	Default

chanhvinh.com

3.2.1.3 Power supply

The kit is bus-powered. VBUS supply from the host PC can be disconnected from the kit by removing the jumper from connector J1 pin 1-2.

The board consists of two IR3883MTRPBF regulators from Infineon Technologies. It is a DC-DC buck switching regulator rated for 3 A. With a 16PQFN package, the regulator features overvoltage protection, overcurrent protection, and overtemperature protection. The following voltages are generated from VBUS (i.e., 5 V ± 0.25 V) and the rating of each regulator is:

- U6: 3.3 V ±5% at 3 A
- U2: 1.8 V ± 5% at 3 A

Jumpers J9, J10, J12, and J13 are 3-pin headers that can be used to switch the VDDIO supply between 1.8 V and 3.3 V. Shorting the pins 1-2 in these jumpers will set the voltage at respective supply pin to 1.8 V. Similarly, shorting the pins 2-3 in these jumpers will set the voltage at respective supply pin to 3.3 V.

Table 4 DVK jumper settings

Name	Jumper	Short 1-2	Short 2-3
V3P3_1P8	J9	1.8 V	3.3 V
VDDIO_CTRL	J10	1.8 V	3.3 V
VDDIO_P0	J12	1.8 V	3.3 V
VDDIO_P1	J13	1.8 V	3.3 V

Note: For LVDS operation, VDDIO_P0 and VDDIO_P1 must be kept at 3.3 V. VDDIO_P0_CTRL and VDDIO_P1_CTRL can be at either 1.8 V or 3.3 V depending on the desired CTRL signal logic level.

3.2.1.4 EZ-USB™ FX5N (U1)

EZ-USB™ FX5N is a 10 Gbps device controller with a bandwidth to support USB 3.2 Gen 1x2 based host systems. It supports UVC, UAC, U3V, and USB Vendor Class protocols. The EZ-USB™ FX5N DVK is designed to stream video and audio seamlessly to USB host using off-the-shelf FPGA add-on boards and camera modules. It is a 169-ball, 10 mm × 10 mm × 1.2 mm, 13×13 ball array, 0.75 mm pitch FBGA. See the datasheet for more details on EZ-USB™ FX5N.

3.2.1.5 QSPI flash (U6, U7)

The kit has two Infineon S25FS256SDSNFI000 256 Mb QSPI flash devices. When the DVK is interface with an FPGA board, it is necessary to store the FPGA bin file in a flash memory. The DVK on-board flash modules can be used for this purpose.

3.2.1.6 FMC HPC mezzanine connector (J8)

The kit uses an ASP-134488-01 FMC-HPC mezzanine connector to interface with off-the-shelf FPGA boards. It is a 400-pin, 1.27 mm pitch connector that supports ANSI/VITA 57 standard. All the high bandwidth subsystem interfaces are brought to the FMC connector.

chanhvinh.com

3.2.1.7 GPIO interface connector (J5)

The kit has a 2X10-pin GPIO connector to interface with GPIO accessory board. All the low-speed peripheral signals of EZ-USB™ FX5N are brought to this connector. Using the GPIO accessory board, you can interface with external add-on modules such as CAN transceivers, PDM microphones, UART devices, KitProg3 programmer for programming EZ-USB™ FX5N bootloader, Arduino shield boards, and I2S devices.

3.2.1.8 USB-C Full-Speed connector (J3)

EZ-USB™ FX5N has a debug access port (DAP) that acts as the interface for device programming and debugging. An external programmer or debugger (the “host”) communicates with the DAP through the device Serial Wire Debug (SWD) or JTAG interface pins through the USB-C Full-Speed connector.

3.2.1.9 SWD header (J6)

This DVK provides a SWD header interface that can be used to program the EZ-USB™ FX5N device. J6 along with J14 can used for JTAG operation. This interface can also be used for boundary scan operations.

3.2.1.10 Crystal (Y1)

EZ-USB™ FX5N needs a 24 MHz crystal to generate the clock for its operation having tolerance ±10 ppm and drive level 100 µW.

3.2.1.11 LED (USER_LED, PWRON)

- LED1 (user LED): Green LED connected to GPIO5 of EZ-USB™ FX5N. It is an application/firmware-controlled LED used for the FW debug purpose
- LED2 (PWR ON): With power-on, this LED glows green, indicating the 3.3 V power supply is ON

chanhvinh.com

4 Programming the kit

The KIT_FX5N_FMC_001 kit is preprogrammed with the internal colorbar firmware to stream 4K UVC color bar video generated internally inside EZ-USB™ FX5N. This allows you to stream the color bar video without the need of an FPGA board. Do the following steps if you need to change the firmware.

4.1 Program the user application

1. Following the SDK user guide, build the code example project which you want to program on the kit
2. Open EZ-USB™ FX Control Center application from the installed directory

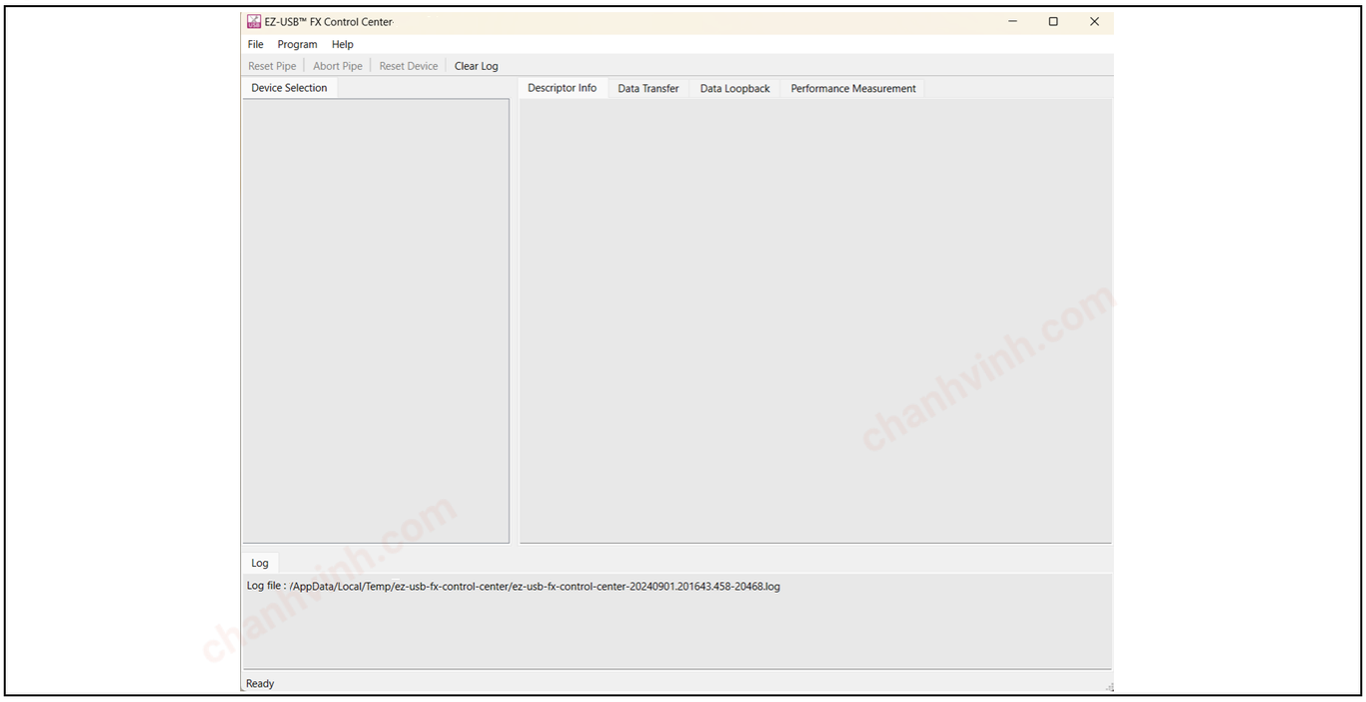

Figure 4 EZ-USB™ FX Control Center

3. Connect the EZ-USB™ FX5N DVK to the PC via the USB-C cable provided with the kit
4. Press and hold the PMODE switch (SW2) and reset the device by pressing the RESET switch (SW3). Release the PMODE switch (SW2)
5. Wait for the **EZ-USB™ FX Control Center utility** tool to detect the bootloader

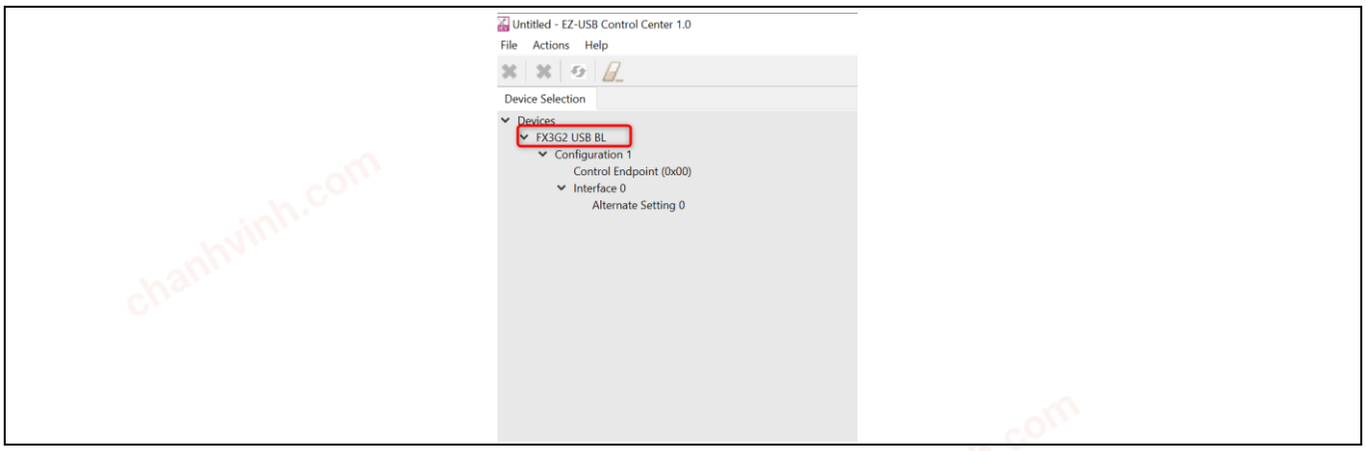

Figure 5 Bootloader detection in EZ-USB™ FX Control Center application

chanhvinh.com

Programming the kit

6. Do the following to program the device:

   Click **FX3G2 USB BL** > Click **Program** > Click **Internal Flash**

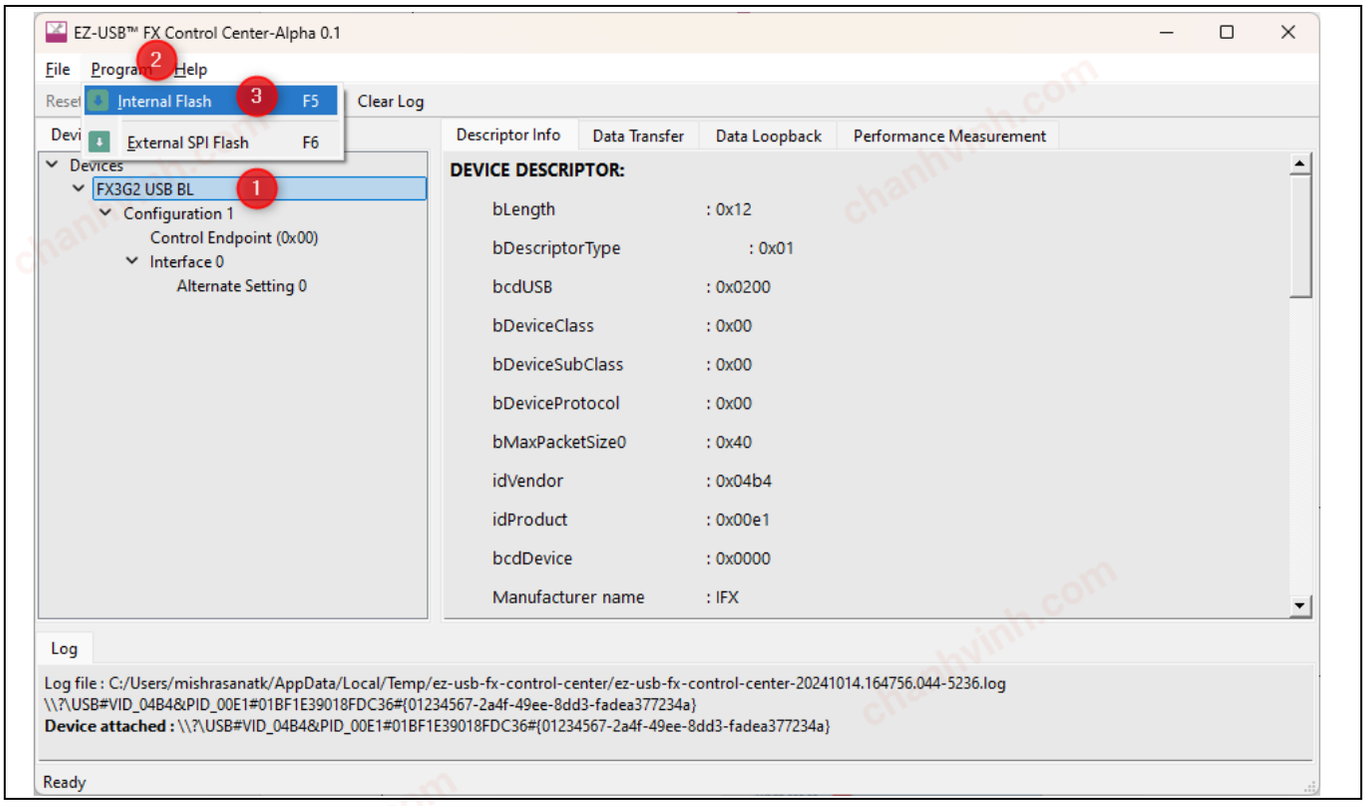

Figure 6 Program in Control Center application

7. Navigate to the *<Drive>\EZ-USB FX5N Release Package\SDK\<project folder>\out* folder based on the code example project. Select the hex file to program and click **Open**

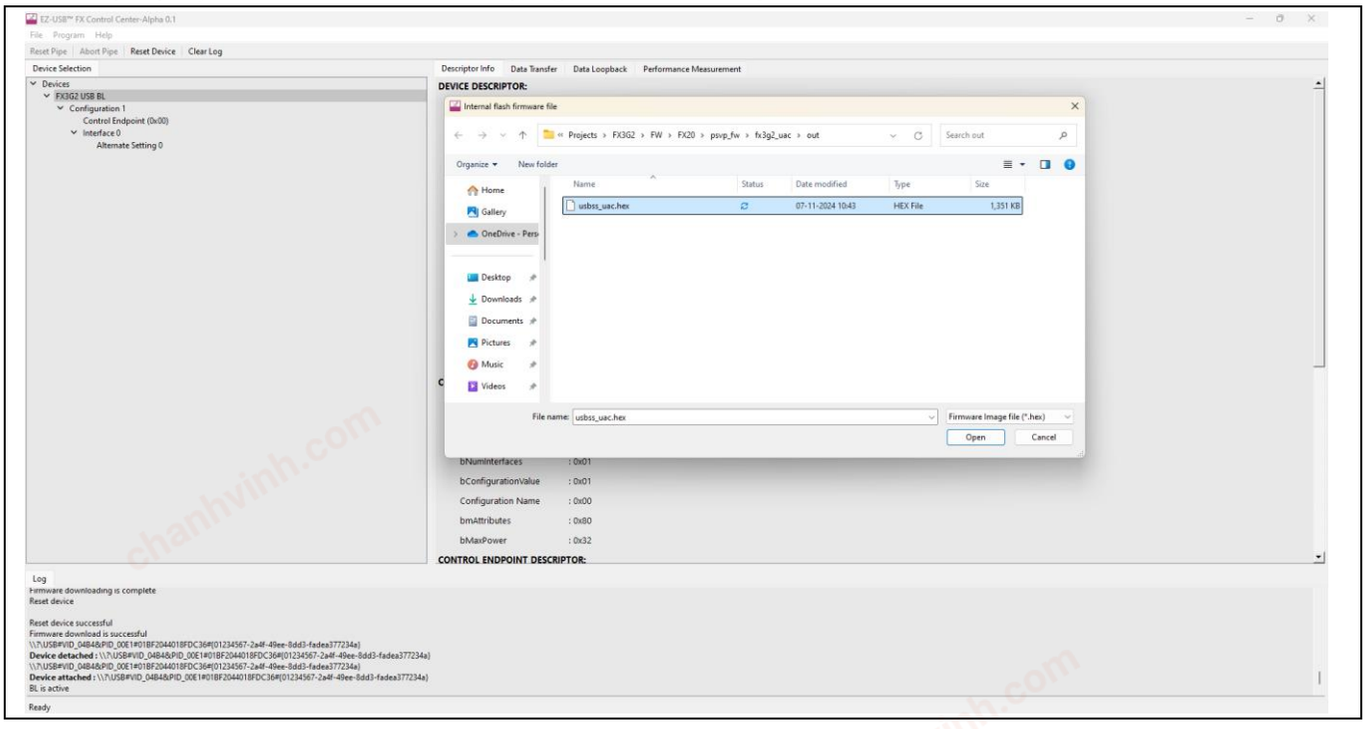

Figure 7 Programming EZ-USB™ FX5N

chanhvinh.com

Programming the kit

8. Wait for programming to complete. Observe the EZ-USB™ FX5N device detach message in the **Log** window

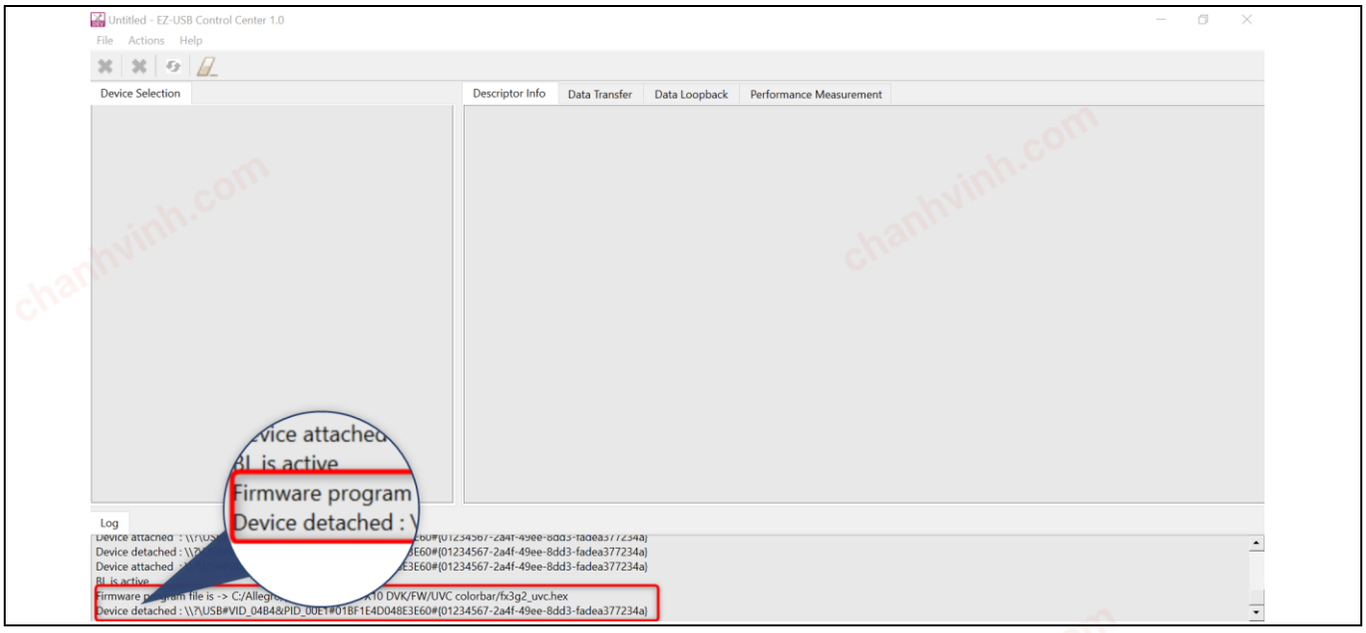

Figure 8 Programming successful Log window

chanhvinh.com

5 Run the application (internal color bar)

5.1 Viewing the UVC output using windows camera application

1. Follow the instructions in the SDK user guide to build the *uvc_inmem* project
2. Program EZ-USB™ FX5N with the generated *.hex* file by following the steps mentioned in the Program the user application section
3. Open Windows **Device Manager** and verify that the EZ-USB™ FX5N camera is listed



Figure 9 Board enumerated as FX3G2 device in Windows Device Manager

Note: The enumeration name can vary based on the latest FW available.

4. Open the Windows Camera application and click the flip camera option. Ensure the resolution selected is 3840X2160 in the settings window. Observe the video streaming

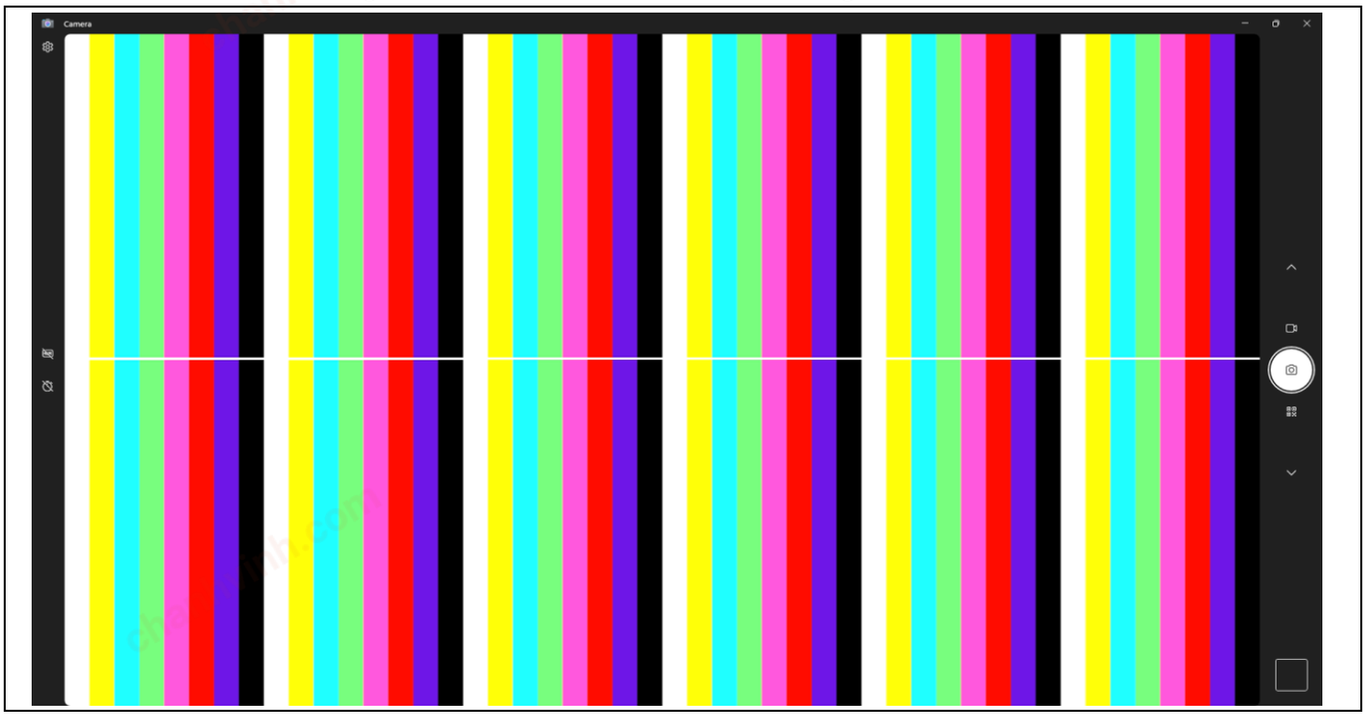

Figure 10 Streaming on Windows Camera application

chanhvinh.com

Run the application (internal color bar)

5. On a USB 3.2 Gen 1x2 host, the frame rate will be ~60 fps. This can be viewed on the serial terminal such as Tera Term. Take a USB-C FS cable and connect its one end to J3 and the other end to a PC. Open any serial terminal application such as Tera Term. Select the correct COM port and you see the debug logs printing ~60 fps.

5.2 Viewing the U3V output using eBus Player application

1. Follow the instructions in the SDK user guide to build the *u3v_inmem* project
2. Program EZ-USB™ FX5N with the generated *.hex* file by following the steps mentioned in the Program the user application section
3. Check the **Device Manager** for USB enumeration

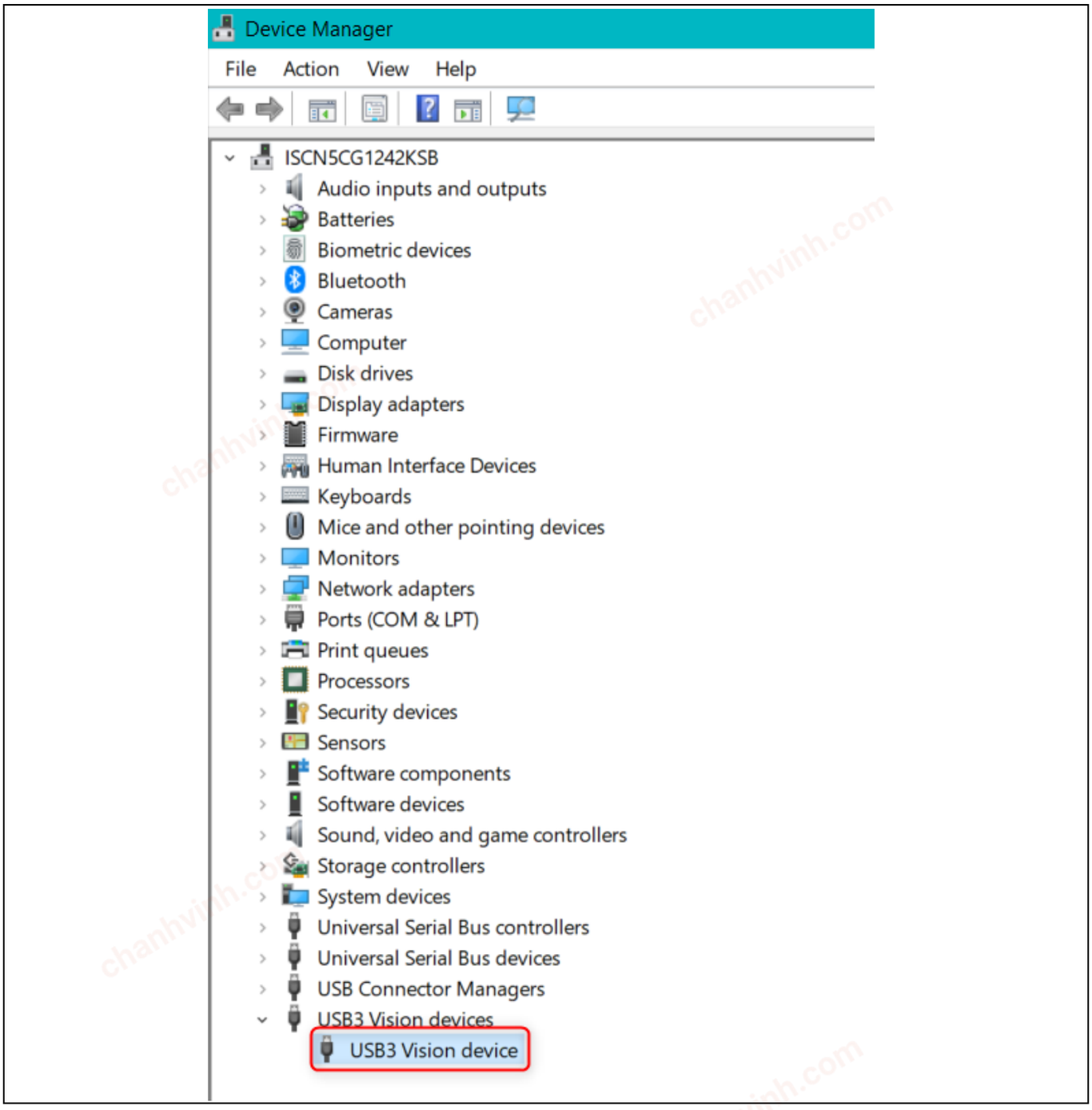

Figure 11 U3V device enumeration

chanhvinh.com

Run the application (internal color bar)

4. Open eBus Player application and do the following:
   a) Go to **Select/Connect**
   b) Select the available device. For example, **FX3G2**
   c) Press **OK**

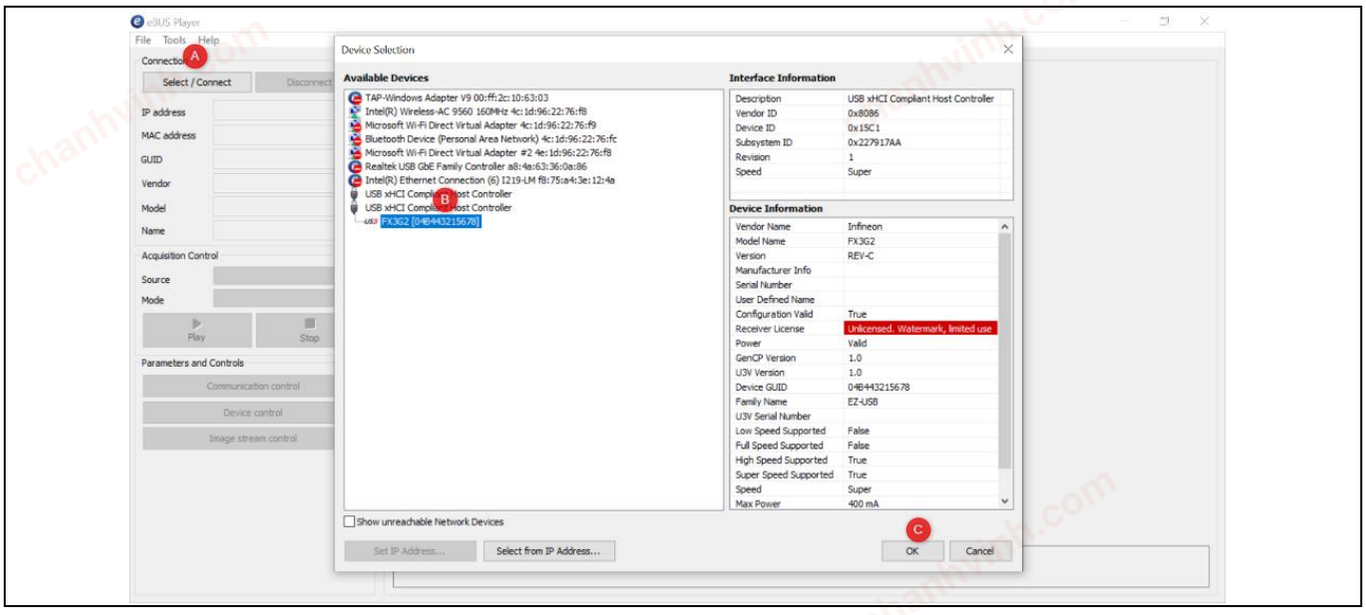

Figure 12 eBus Player settings

5. Click on **Play** button and observe the video streaming



Figure 13 U3V colorbar streaming

Note: Internal color bar can stream at up to ~60 fps.

chanhvinh.com

6 Troubleshooting

6.1 EZ-USB™ FX5N programming test

1. If EZ-FX™ Control Center is not detecting the EZ-USB™ FX5N device:
   a) Press and hold the PMODE switch (SW2)
   b) RESET EZ-USB™ FX5N: (Either press the RESET switch SW1 and release or power cycle the kit)
   c) Release the PMODE switch after a delay

If you have any questions, create a support request on the Infineon Technical Support page.

chanhvinh.com

References

[1] Infineon Technologies AG: *EZ-USB™ FX5N kit webpage*; Available online

[2] Infineon Technologies AG: *EZ-USB™ FX5N datasheet;* Available online

chanhvinh.com

Glossary

DMA
*active authentica*tion (AA)

DAP

debug access port

EMC

Electromagnetic Compatibility

ESD

Electrostatic discharge

FW

Firmware

JTAG

Joint test action group

LVDS

Low-voltage differential signaling

PDM

Pulse density modulation

QSPI

Quad serial peripheral interface

SDK

Software development kit

SPI

Serial peripheral interface

SWD

Serial Wire Debug

chanhvinh.com

Revision history

Document revision	Date	Description of changes
**	2025-02-27	Initial release
*A	2025-03-21	Updated FX5N webpage url
*B	2025-03-25	Released to Web

chanhvinh.com

Trademarks
All referenced product or service names and trademarks are the property of their respective owners.

Edition 2025-03-25
Published by

Infineon Technologies AG
81726 Munich, Germany

© 2025 Infineon Technologies AG. All Rights Reserved.

Do you have a question about this document?
Email: erratum@infineon.com

Document reference
002-41266 Rev. *B

Warnings
Due to technical requirements products may contain dangerous substances. For information on the types in question please contact your nearest Infineon Technologies office.

Except as otherwise explicitly approved by Infineon Technologies in a written document signed by authorized representatives of Infineon Technologies, Infineon Technologies' products may not be used in any applications where a failure of the product or any consequences of the use thereof can reasonably be expected to result in personal injury.