chanhvinh.com

International
IOR Rectifier

IRF7779L2PbF

DirectFET™ Power MOSFET ②

- RoHS Compliant, Halogen Free ①
- Lead-Free (Qualified up to 260°C Reflow)
- Ideal for High Performance Isolated Converter Primary Switch Socket
- Optimized for Synchronous Rectification
- Low Conduction Losses
- High Cdv/dt Immunity
- Low Profile (<0.7mm)
- Dual Sided Cooling Compatible ①
- Compatible with existing Surface Mount Techniques ①
- Industrial Qualified

Typical values (unless otherwise specified)

V_{DSS}	V_{GS}	$R_{DS(on)}$
150V min	±20V max	9.0mΩ@ 10V
$Q_{g\ tot}$	Q_{gd}	$V_{gs(th)}$
97nC	33nC	4.0V

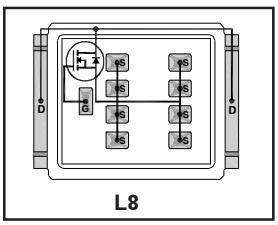

L8


DirectFET™ ISOMETRIC

Applicable DirectFET Outline and Substrate Outline ①

SB	SC			M2	M4		L4	L6	L8	

Description

The IRF7779L2TR/TR1PbF combines the latest HEXFET® Power MOSFET Silicon technology with the advanced DirectFET™ packaging to achieve the lowest on-state resistance in a package that has a footprint smaller than a D²PAK and only 0.7 mm profile. The DirectFET package is compatible with existing layout geometries used in power applications, PCB assembly equipment and vapor phase, infra-red or convection soldering techniques, when application note AN-1035 is followed regarding the manufacturing methods and processes. The DirectFET package allows dual sided cooling to maximize thermal transfer in power systems.
The IRF7779L2TR/TR1PbF is optimized for high frequency switching and synchronous rectification applications. The reduced total losses in the device coupled with the high level of thermal performance enables high efficiency and low temperatures, which are key for system reliability improvements, and makes this device ideal for high performance power converters.

Orderable part number	Package Type	Standard Pack		Note
		Form	Quantity	
IRF7779L2TRPbF	DirectFET2 Large Can	Tape and Reel	4000	"TR" suffix
~~IRF7779L2TR1PbF~~	~~DirectFET2 Large Can~~	~~Tape and Reel~~	~~1000~~	~~"TR1" suffix~~ EOL notice # 264

Absolute Maximum Ratings

	Parameter	Max.	Units
V_{DS}	Drain-to-Source Voltage	150	V
V_{GS}	Gate-to-Source Voltage	±20	
I_D @ T_C = 25°C	Continuous Drain Current, V_{GS} @ 10V (Silicon Limited)④	67	A
I_D @ T_C = 100°C	Continuous Drain Current, V_{GS} @ 10V (Silicon Limited)④	47	
I_D @ T_A = 25°C	Continuous Drain Current, V_{GS} @ 10V (Silicon Limited)③	11	
I_D @ T_C = 25°C	Continuous Drain Current, V_{GS} @ 10V (Package Limited) ④	375	
I_{DM}	Pulsed Drain Current ⑤	270	
E_{AS}	Single Pulse Avalanche Energy ⑥	270	mJ
I_{AR}	Avalanche Current ⑤	40	A

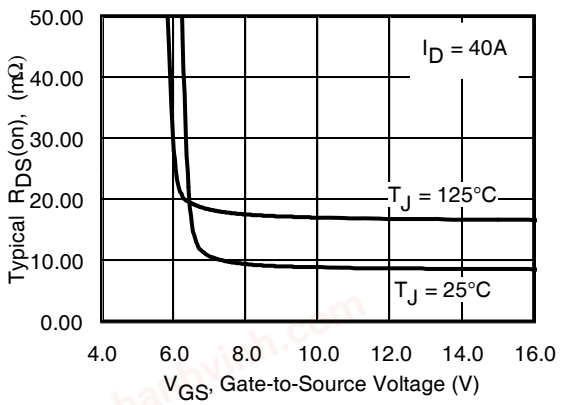

Fig 1. Typical On-Resistance vs. Gate Voltage

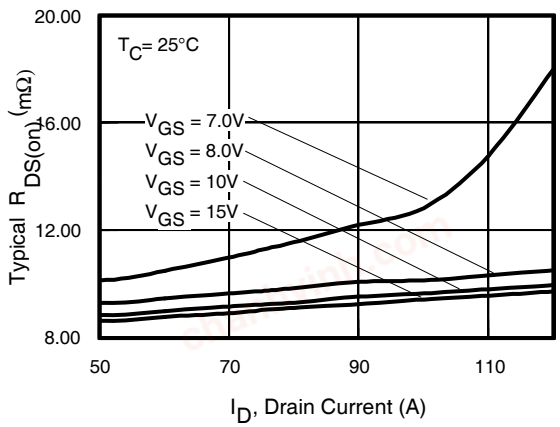

Fig 2. Typical On-Resistance vs. Drain Current

Notes:

① Click on this section to link to the appropriate technical paper.
② Click on this section to link to the DirectFET Website.
③ Surface mounted on 1 in. square Cu board, steady state.
④ T_C measured with thermocouple mounted to top (Drain) of part.
⑤ Repetitive rating; pulse width limited by max. junction temperature.
⑥ Starting T_J = 25°C, L = 0.33mH, R_G = 25Ω, I_{AS} = 40A.

 © 2014 International Rectifier

chanhvinh.com

Static @ T_J = 25°C (unless otherwise specified)

	Parameter	Min.	Typ.	Max.	Units	Conditions
BV_{DSS}	Drain-to-Source Breakdown Voltage	150	—	—	V	V_{GS} = 0V, I_D = 250µA
$\Delta BV_{DSS}/\Delta T_J$	Breakdown Voltage Temp. Coefficient	—	0.13	—	V/°C	Reference to 25°C, I_D = 2mA
$R_{DS(on)}$	Static Drain-to-Source On-Resistance	—	9.0	11	mΩ	V_{GS} = 10V, I_D = 40A ⑦
$V_{GS(th)}$	Gate Threshold Voltage	3.0	4.0	5.0	V	V_{DS} = V_{GS}, I_D = 250µA
$\Delta V_{GS(th)}/\Delta T_J$	Gate Threshold Voltage Coefficient	—	-15	—	mV/°C	
I_{DSS}	Drain-to-Source Leakage Current	—	—	20	µA	V_{DS} = 150V, V_{GS} = 0V
		—	—	250		V_{DS} = 120V, V_{GS} = 0V, T_J = 125°C
I_{GSS}	Gate-to-Source Forward Leakage	—	—	100	nA	V_{GS} = 20V
	Gate-to-Source Reverse Leakage	—	—	-100		V_{GS} = -20V
gfs	Forward Transconductance	83	—	—	S	V_{DS} = 50V, I_D = 40A
Q_g	Total Gate Charge	—	97	150		
Q_{gs1}	Pre-Vth Gate-to-Source Charge	—	27	—		V_{DS} = 75V
Q_{gs2}	Post-Vth Gate-to-Source Charge	—	6.9	—	nC	V_{GS} = 10V
Q_{gd}	Gate-to-Drain Charge	—	33	50		I_D = 40A
Q_{godr}	Gate Charge Overdrive	—	30	—		See Fig. 9
Q_{sw}	Switch Charge (Q_{gs2} + Q_{gd})	—	40	—		
Q_{oss}	Output Charge	—	39	—	nC	V_{DS} = 16V, V_{GS} = 0V
R_G	Gate Resistance	—	1.5	—	Ω	
$t_{d(on)}$	Turn-On Delay Time	—	16	—		V_{DD} = 75V, V_{GS} = 10V ⑦
t_r	Rise Time	—	19	—		I_D = 40A
$t_{d(off)}$	Turn-Off Delay Time	—	36	—	ns	R_G=1.8Ω
t_f	Fall Time	—	12	—		
C_{iss}	Input Capacitance	—	6660	—		V_{GS} = 0V
C_{oss}	Output Capacitance	—	840	—	pF	V_{DS} = 25V
C_{rss}	Reverse Transfer Capacitance	—	180	—		ƒ = 1.0MHz
C_{oss}	Output Capacitance	—	5620	—		V_{GS} = 0V, V_{DS} = 1.0V, f=1.0MHz
C_{oss}	Output Capacitance	—	400	—		V_{GS} = 0V, V_{DS} = 120V, f=1.0MHz

Diode Characteristics

	Parameter	Min.	Typ.	Max.	Units	Conditions
I_S	Continuous Source Current (Body Diode)	—	—	67	A	MOSFET symbol showing the integral reverse p-n junction diode.
I_{SM}	Pulsed Source Current (Body Diode) ⑤	—	—	270		
V_{SD}	Diode Forward Voltage	—	—	1.3	V	T_J = 25°C, I_S = 40A, V_{GS} = 0V ⑦
t_{rr}	Reverse Recovery Time	—	110	170	ns	T_J = 25°C, I_F = 40A, V_{DD} = 75V
Q_{rr}	Reverse Recovery Charge	—	510	770	nC	di/dt = 100A/µs ⑦

Notes:

⑤ Repetitive rating; pulse width limited by max. junction temperature.

⑦ Pulse width ≤ 400µs; duty cycle ≤ 2%.

chanhvinh.com

Absolute Maximum Ratings

	Parameter	Max.	Units
P_D @T_C = 25°C	Power Dissipation ④	125	W
P_D @T_C = 100°C	Power Dissipation ④	63	
P_D @T_A = 25°C	Power Dissipation ①	3.3	
T_P	Peak Soldering Temperature	270	°C
T_J T_{STG}	Operating Junction and Storage Temperature Range	-55 to + 175	

Thermal Resistance

	Parameter	Typ.	Max.	Units
$R_{\theta JA}$	Junction-to-Ambient ③	—	45	°C/W
$R_{\theta JA}$	Junction-to-Ambient ⑧	12.5	—	
$R_{\theta JA}$	Junction-to-Ambient ⑨	20	—	
$R_{\theta J\text{-}Can}$	Junction-to-Can ④⑩	—	1.2	
$R_{\theta J\text{-}PCB}$	Junction-to-PCB Mounted	—	0.5	

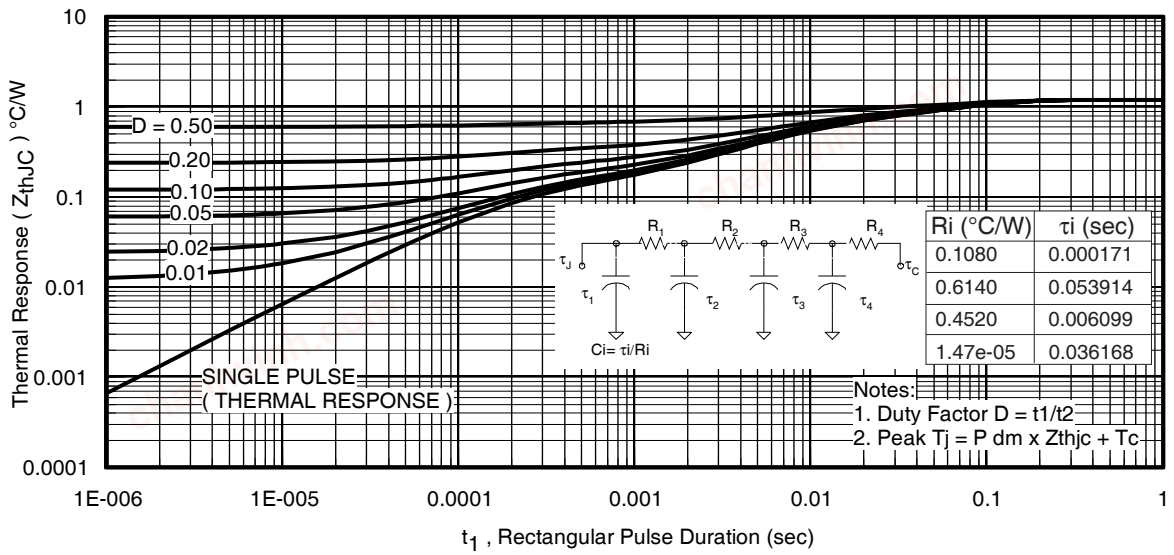

Fig 3. Maximum Effective Transient Thermal Impedance, Junction-to-Case ④

Notes:

③ Surface mounted on 1 in. square Cu board, steady state.

④ T_C measured with thermocouple incontact with top (Drain) of part.

⑧ Used double sided cooling, mounting pad with large heatsink.

⑨ Mounted on minimum footprint full size board with metalized back and with small clip heatsink.

⑩ R_θ is measured at T_J of approximately 90°C.



③ Surface mounted on 1 in. square Cu board (still air).



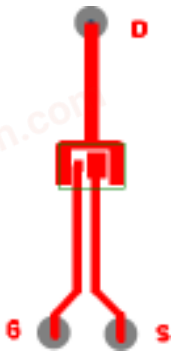

⑨ Mounted on minimum footprint full size board with metalized back and with small clip heatsink. (still air)

 © 2014 International Rectifier

chanhvinh.com

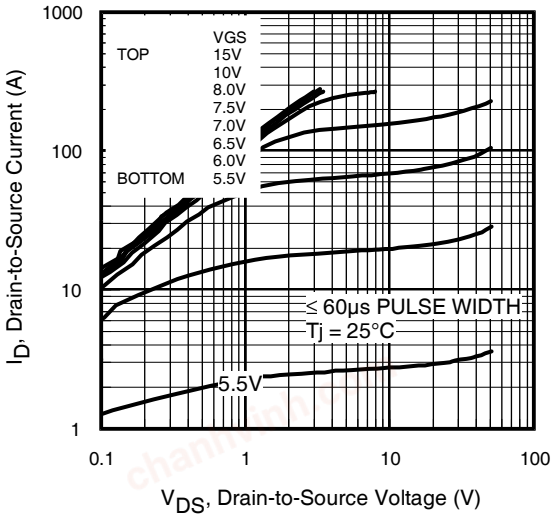

Fig 4. Typical Output Characteristics

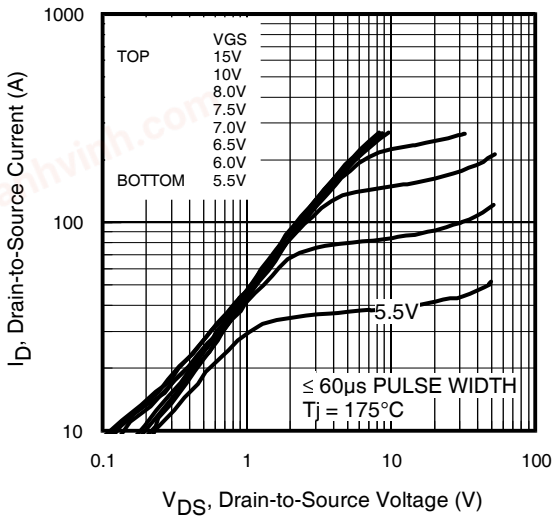

Fig 5. Typical Output Characteristics

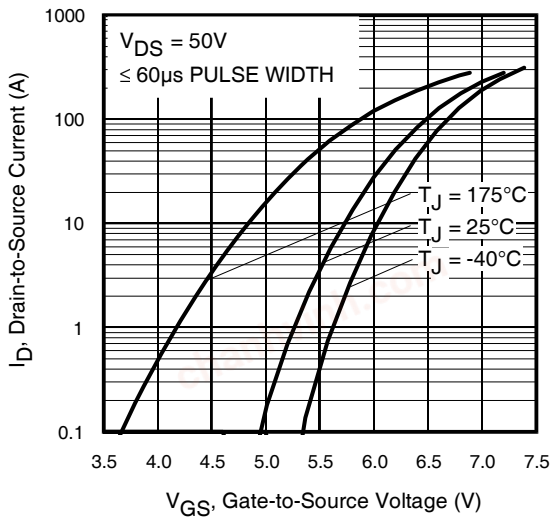

Fig 6. Typical Transfer Characteristics

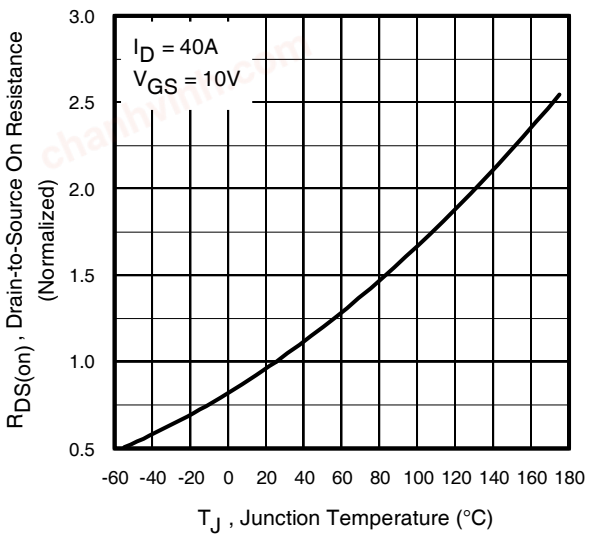

Fig 7. Normalized On-Resistance vs. Temperature

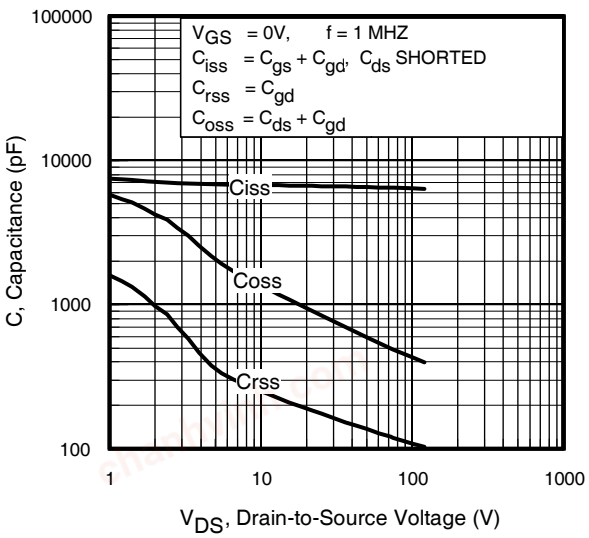

Fig 8. Typical Capacitance vs.Drain-to-Source Voltage

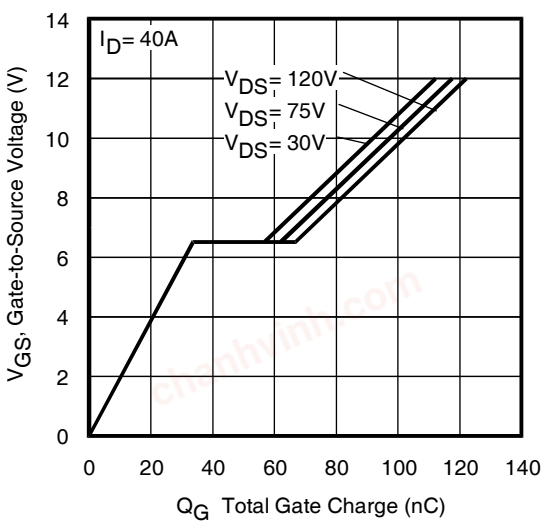

Fig 9. Typical Total Gate Charge vs Gate-to-Source Voltage

chanhvinh.com

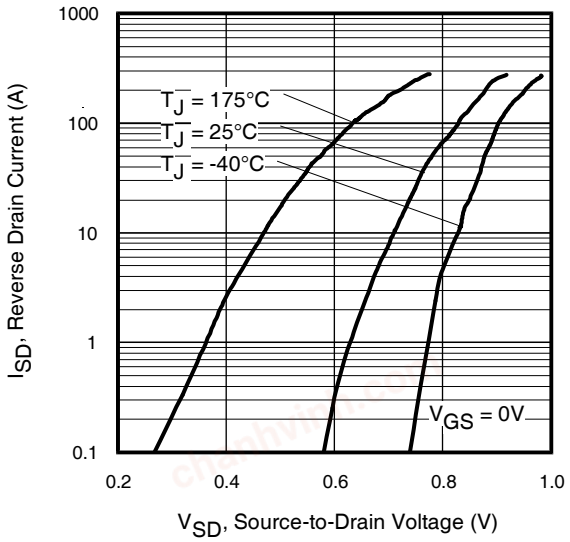

Fig 10. Typical Source-Drain Diode Forward Voltage

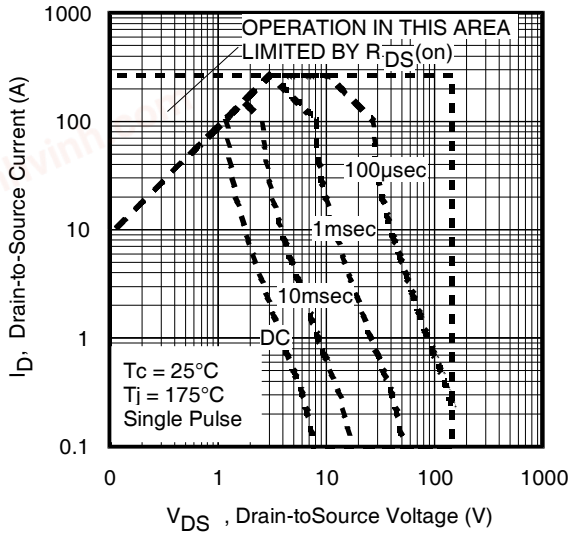

Fig11. Maximum Safe Operating Area

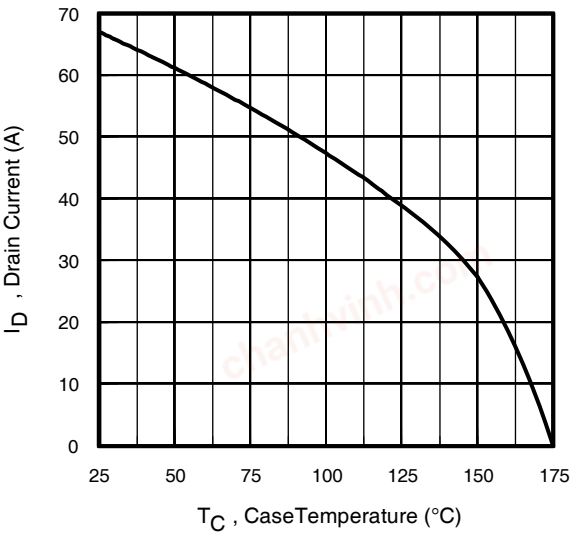

Fig 12. Maximum Drain Current vs. Case Temperature

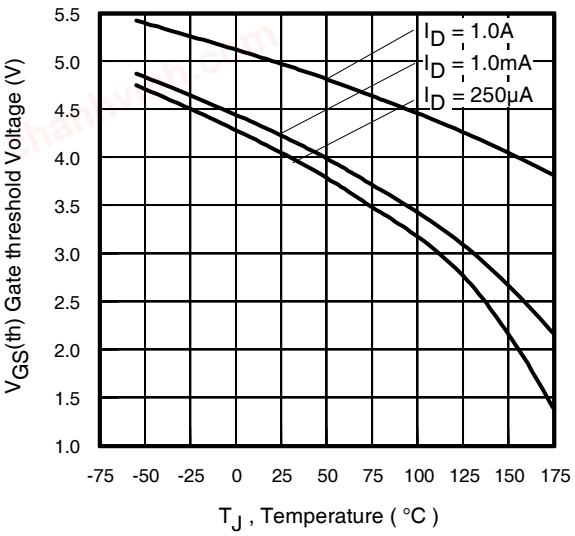

Fig 13. Typical Threshold Voltage vs. Junction Temperature

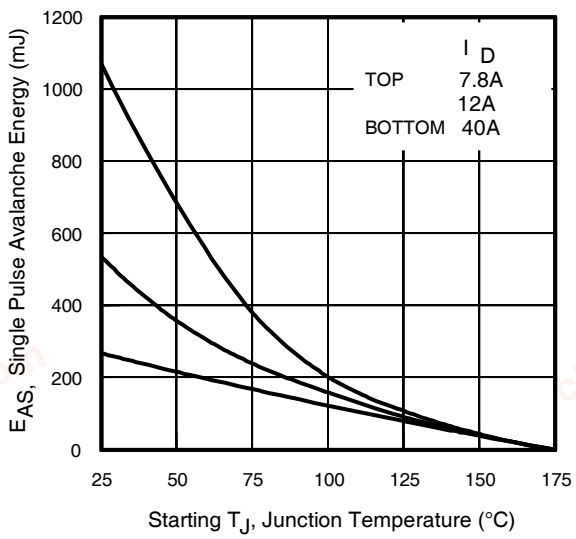

Fig 14. Maximum Avalanche Energy Vs. Drain Current

 © 2014 International Rectifier

chanhvinh.com

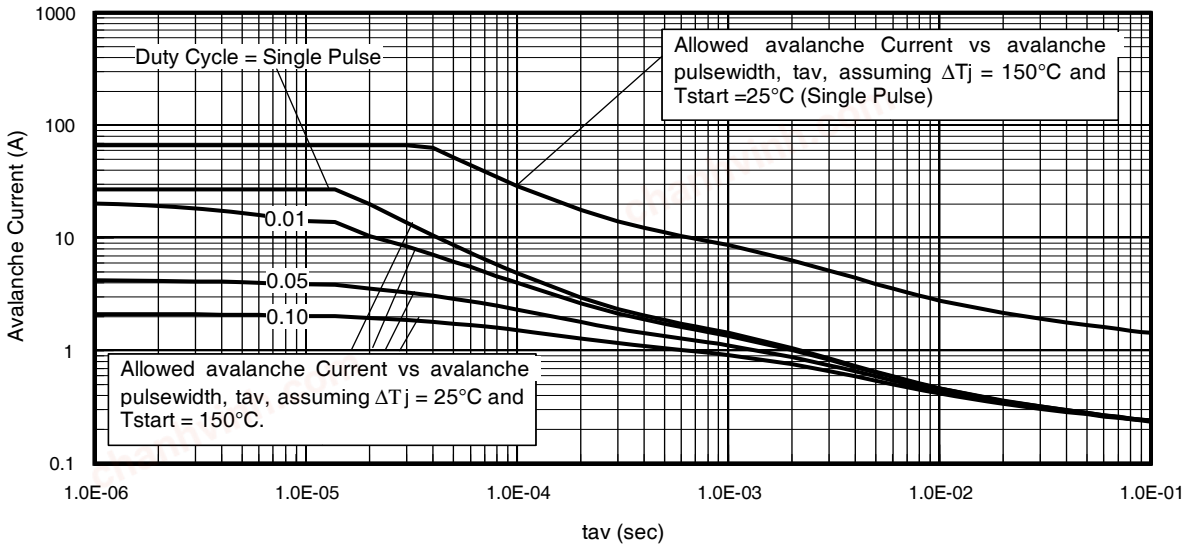

Fig 15. Typical Avalanche Current Vs.Pulsewidth

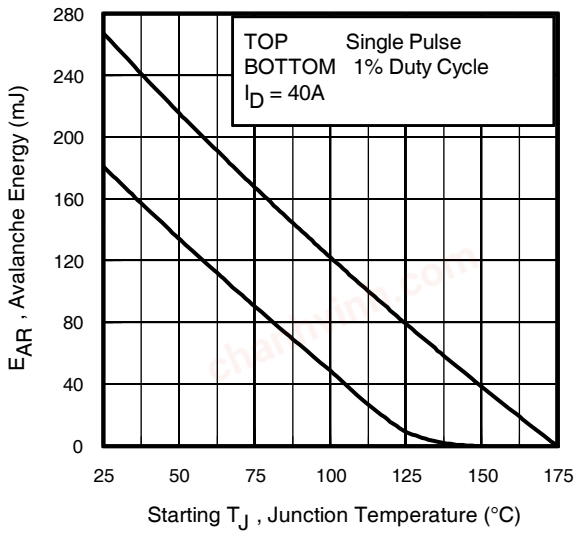

Fig 16. Maximum Avalanche Energy Vs. Temperature

Notes on Repetitive Avalanche Curves , Figures 15, 16:
(For further info, see AN-1005 at www.irf.com)

1. Avalanche failures assumption:
   Purely a thermal phenomenon and failure occurs at a temperature far in excess of T_{jmax}. This is validated for every part type.
2. Safe operation in Avalanche is allowed as long asT_{jmax} is not exceeded.
3. Equation below based on circuit and waveforms shown in Figures 19a, 19b.
4. $P_{D\ (ave)}$ = Average power dissipation per single avalanche pulse.
5. BV = Rated breakdown voltage (1.3 factor accounts for voltage increase during avalanche).
6. I_{av} = Allowable avalanche current.
7. ΔT = Allowable rise in junction temperature, not to exceed T_{jmax} (assumed as 25°C in Figure 15, 16).
   t_{av} = Average time in avalanche.
   D = Duty cycle in avalanche = $t_{av} \cdot f$
   $Z_{thJC}(D, t_{av})$ = Transient thermal resistance, see figure 11)

$$P_{D\ (ave)} = 1/2\ (\ 1.3 \cdot BV \cdot I_{av}) = \Delta T / Z_{thJC}$$
$$I_{av} = 2\Delta T / [1.3 \cdot BV \cdot Z_{th}]$$
$$E_{AS\ (AR)} = P_{D\ (ave)} \cdot t_a$$

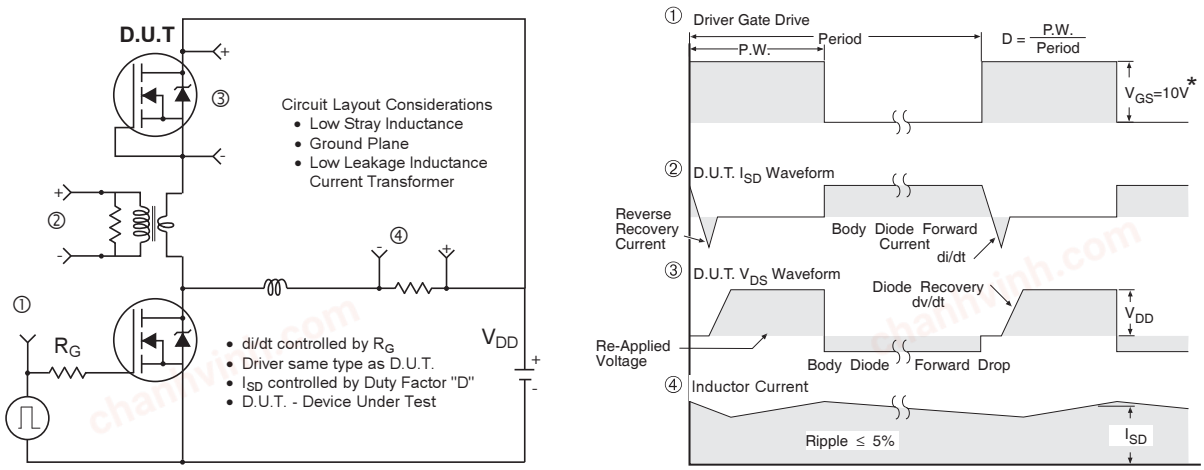

* V_{GS} = 5V for Logic Level Devices

Fig 17. Diode Reverse Recovery Test Circuit for N-Channel HEXFET® Power MOSFETs

 © 2014 International Rectifier

chanhvinh.com

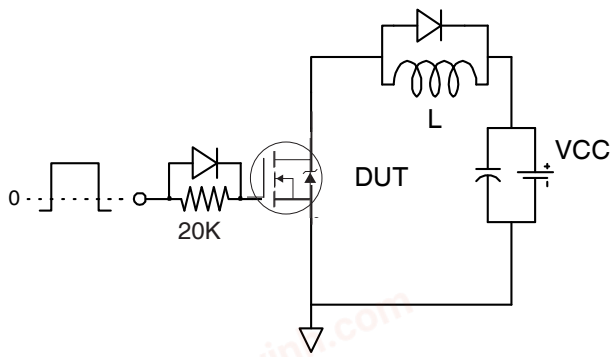

Fig 18a. Gate Charge Test Circuit

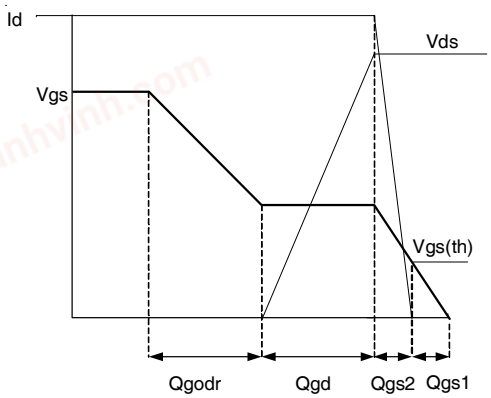

Fig 18b. Gate Charge Waveform

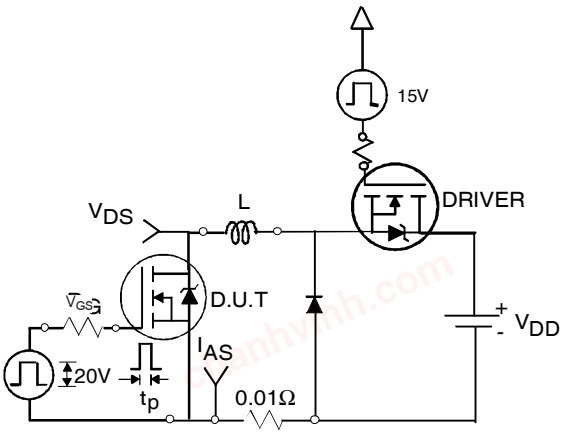

Fig 19a. Unclamped Inductive Test Circuit

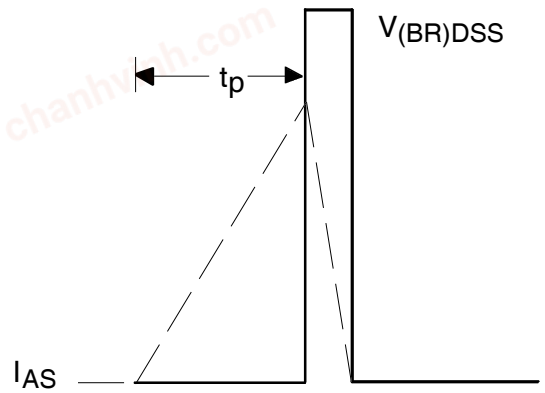

Fig 19b. Unclamped Inductive Waveforms

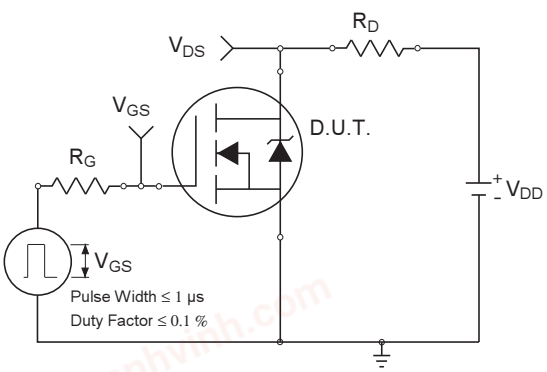

Fig 20a. Switching Time Test Circuit

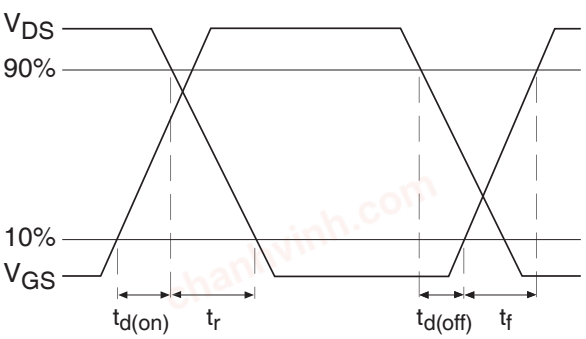

Fig 20b. Switching Time Waveforms

chanhvinh.com

DirectFET™ Board Footprint, L8 (Large Size Can).

Please see AN-1035 for DirectFET assembly details and stencil and substrate design recommendations

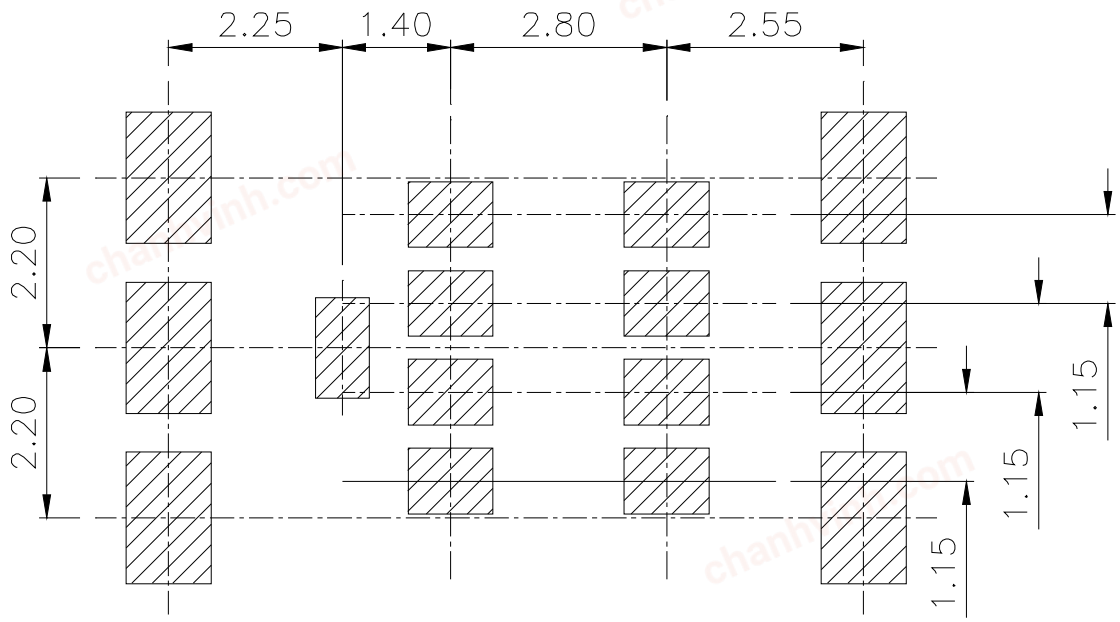

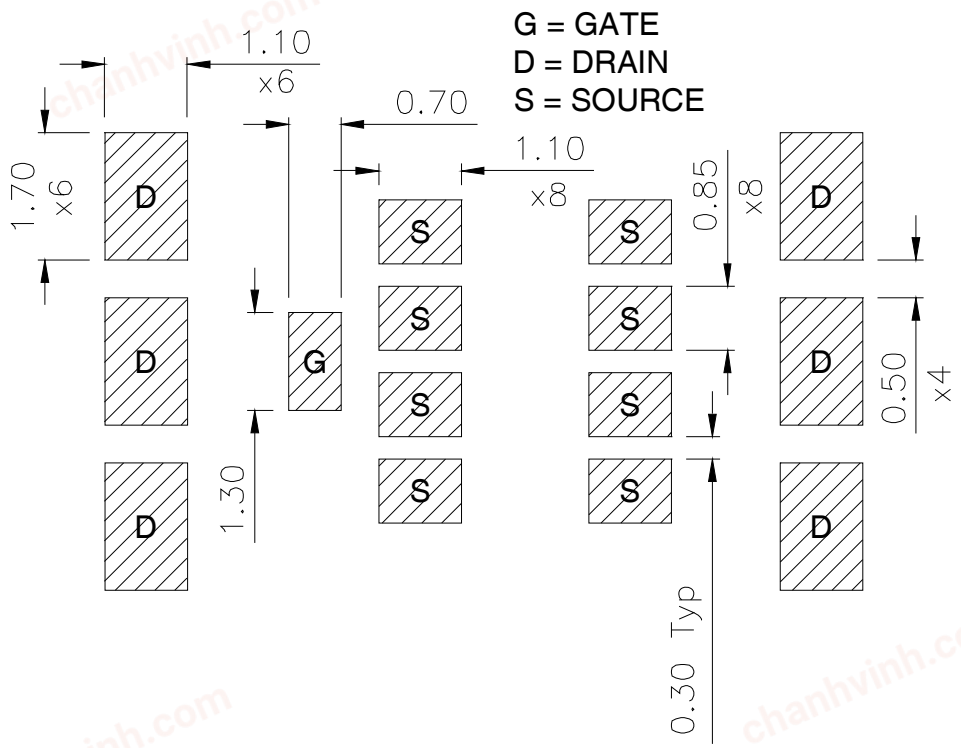

Note: For the most current drawing please refer to IR website at: http://www.irf.com/package/

chanhvinh.com

DirectFET™ Outline Dimension, L8 Outline (LargeSize Can).

Please see AN-1035 for DirectFET assembly details and stencil and substrate design recommendations

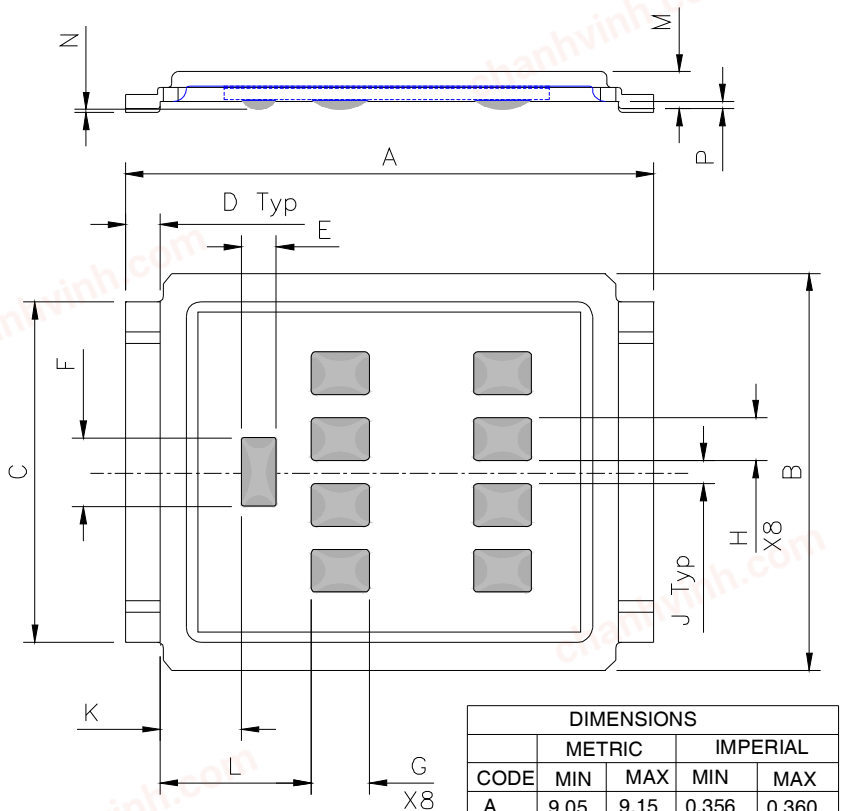

DIMENSIONS				
	METRIC		IMPERIAL	
CODE	MIN	MAX	MIN	MAX
A	9.05	9.15	0.356	0.360
B	6.85	7.10	0.270	0.280
C	5.90	6.00	0.232	0.236
D	0.55	0.65	0.022	0.026
E	0.58	0.62	0.023	0.024
F	1.18	1.22	0.046	0.048
G	0.98	1.02	0.015	0.017
H	0.73	0.77	0.029	0.030
J	0.38	0.42	0.015	0.017
K	1.34	1.47	0.053	0.058
L	2.52	2.69	0.099	0.106
M	0.59	0.70	0.023	0.028
N	0.03	0.08	0.001	0.003
P	0.09	0.18	0.003	0.007

DirectFET™ Part Marking

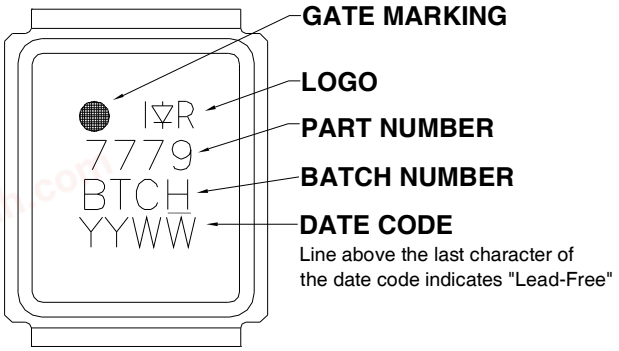

Note: For the most current drawing please refer to IR website at: http://www.irf.com/package/

chanhvinh.com

DirectFET™ Tape & Reel Dimension (Showing component orientation).

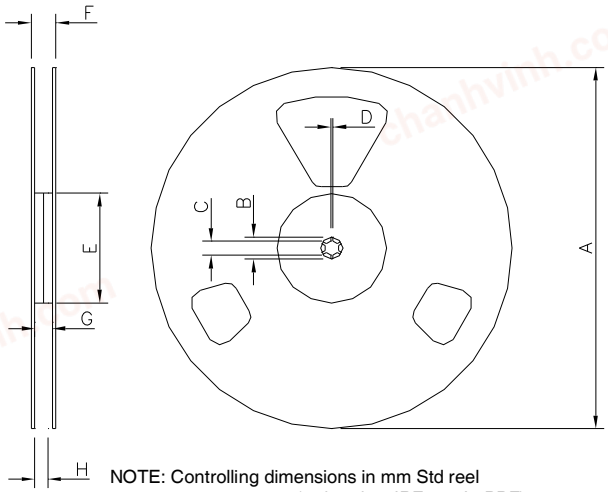

NOTE: Controlling dimensions in mm Std reel quantity is 4000 parts. (ordered as IRF7779L2PBF).

REEL DIMENSIONS				
STANDARD OPTION **(QTY 4000)**				
	METRIC		IMPERIAL	
CODE	MIN	MAX	MIN	MAX
A	330.0	N.C	12.992	N.C
B	20.2	N.C	0.795	N.C
C	12.8	13.2	0.504	0.520
D	1.5	N.C	0.059	N.C
E	100.0	N.C	3.937	N.C
F	N.C	22.4	N.C	0.889
G	16.4	18.4	0.646	0.724
H	15.9	18.4	0.626	0.724

LOADED TAPE FEED DIRECTION

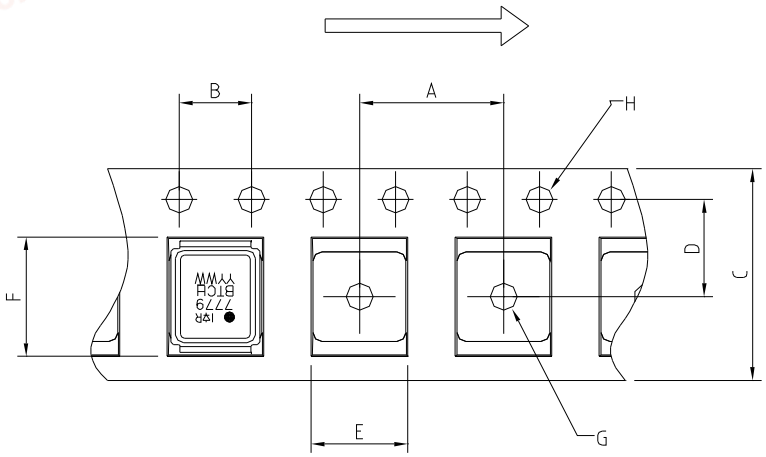

NOTE: CONTROLLING DIMENSIONS IN MM

DIMENSIONS				
	METRIC		IMPERIAL	
CODE	MIN	MAX	MIN	MAX
A	11.90	12.10	0.469	0.476
B	3.90	4.10	0.154	0.161
C	15.90	16.30	0.626	0.642
D	7.40	7.60	0.291	0.299
E	7.20	7.40	0.284	0.291
F	9.90	10.10	0.390	0.398
G	1.50	NC	0.059	NC
H	1.50	1.60	0.059	0.063

Note: For the most current drawing please refer to IR website at: http://www.irf.com/package/

chanhvinh.com

Qualification Information†

Qualification level	Industrial ††	
	(per JEDEC JESD47F††† guidelines)	
	Comments: This family of products has passed JEDEC's Industrial qualification. IR's Consumer qualification level is granted by extension of the higher Industrial level.	
Moisture Sensitivity Level	DFET2	MSL1 (per JEDEC J-STD-020D†††)
RoHS Compliant	Yes	

† Qualification standards can be found at International Rectifier's web site http://www.irf.com/product-info/reliability

†† Higher qualification ratings may be available should the user have such requirements. Please contact your International Rectifier sales representative for further information: http://www.irf.com/whoto-call/salesrep/

††† Applicable version of JEDEC standard at the time of product release.

Revision History

Date	Comments
5/6/2014	• Updated ordering information to reflect the End-Of-life (EOL) of the mini-reel option (EOL notice #264). • Updated data sheet based on corporate template.

International
IOR Rectifier

IR WORLD HEADQUARTERS: 101 N. Sepulveda Blvd., El Segundo, California 90245, USA
To contact International Rectifier, please visit http://www.irf.com/whoto-call/

 © 2014 International Rectifier

chanhvinh.com

IMPORTANT NOTICE

The information given in this document shall in no event be regarded as a guarantee of conditions or characteristics (“Beschaffenheitsgarantie”) .

With respect to any examples, hints or any typical values stated herein and/or any information regarding the application of the product, Infineon Technologies hereby disclaims any and all warranties and liabilities of any kind, including without limitation warranties of non-infringement of intellectual property rights of any third party.

In addition, any information given in this document is subject to customer’s compliance with its obligations stated in this document and any applicable legal requirements, norms and standards concerning customer’s products and any use of the product of Infineon Technologies in customer’s applications.

The data contained in this document is exclusively intended for technically trained staff. It is the responsibility of customer’s technical departments to evaluate the suitability of the product for the intended application and the completeness of the product information given in this document with respect to such application.

For further information on the product, technology, delivery terms and conditions and prices please contact your nearest Infineon Technologies office (**www.infineon.com**).

WARNINGS

Due to technical requirements products may contain dangerous substances. For information on the types in question please contact your nearest Infineon Technologies office.

Except as otherwise explicitly approved by Infineon Technologies in a written document signed by authorized representatives of Infineon Technologies, Infineon Technologies’ products may not be used in any applications where a failure of the product or any consequences of the use thereof can reasonably be expected to result in personal injury.