chanhvinh.com

DCDC Converter

Single-input Voltage, 15 A & 30 A Buck Regulators with SVID

OptiMOS™ IPOL IR38163/363/165/365

FEATURES

- Internal LDO allows single 16 V operation
- Output Voltage Range: 0.5 V to 0.875*PVin
- 0.5% accurate Reference Voltage
- Intel VR12.5 (Rev 1.5); VR13 (Rev 1.0) and SVID (Rev 1.7) compliant
- Enhanced line/load regulation with Feedforward
- Frequency programmable by PMBus™ up to 1.5 MHz
- Enable input with Voltage Monitoring Capability
- Remote Sense Amplifier with True Differential Voltage Sensing
- Fast mode I2C and 400 kHz PMBus™ interface for programming, sequencing and margining output voltage, and for monitoring input voltage, output voltage, output current and temperature.
- PMBus™ configurable fault thresholds for input UVLO, output OVP, OCP and thermal shutdown.
- Thermally compensated pulse-by-pulse current limit and Hiccup Mode Over Current Protection
- Dedicated output voltage sensing for power good indication and overvoltage protection which remains active even when Enable is low.
- Enhanced Pre-Bias Start up
- Integrated MOSFET drivers and Bootstrap diode
- Operating junction temp: -40°C<Tj<125°C
- Thermal Shut Down
- Post Package trimmed rising edge dead-time
- PMBus™ Programmable Power Good Output
- Small Size 5 mm x 7 mm PQFN
- Pb-Free (RoHS Compliant)
- External resistor allows setting up to 16 PMBus™ addresses

DESCRIPTION

This family of OptiMOS™ IPOL devices offers easy-to-use, fully integrated and highly efficient DC/DC regulators with Intel SVID and I2C/PMBus™ interface. The on-chip PWM controller and co-packaged low duty cycle optimized MOSFETs make these devices a space-efficient solution, providing accurate power delivery for low output voltage and high current applications that require an Intel SVID interface.

These versatile devices offer programmability of switching frequency, output voltage, and fault/warning thresholds and fault responses while operating over a wide input range. Thus, they offer flexibility as well as system level security in event of fault conditions.

The switching frequency is programmable from 150 kHz to 1.5 MHz.

The on-chip sensors and ADC along with the SVID and PMBus™ interfaces (IR18163 and IR38363) or SVID and I2C interfaces (IR38165 and IR38365) make it easy to monitor and report input voltage, output voltage, output current and temperature.

APPLICATIONS

- Intel® VR13 and VR12.5 based systems
- Servers and High End Desktop CPU VRs for non-core applications

BASIC APPLICATION

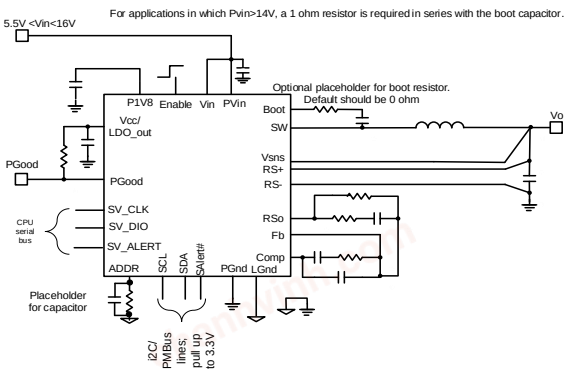

Figure 1: Typical application circuit

chanhvinh.com

PIN DIAGRAM

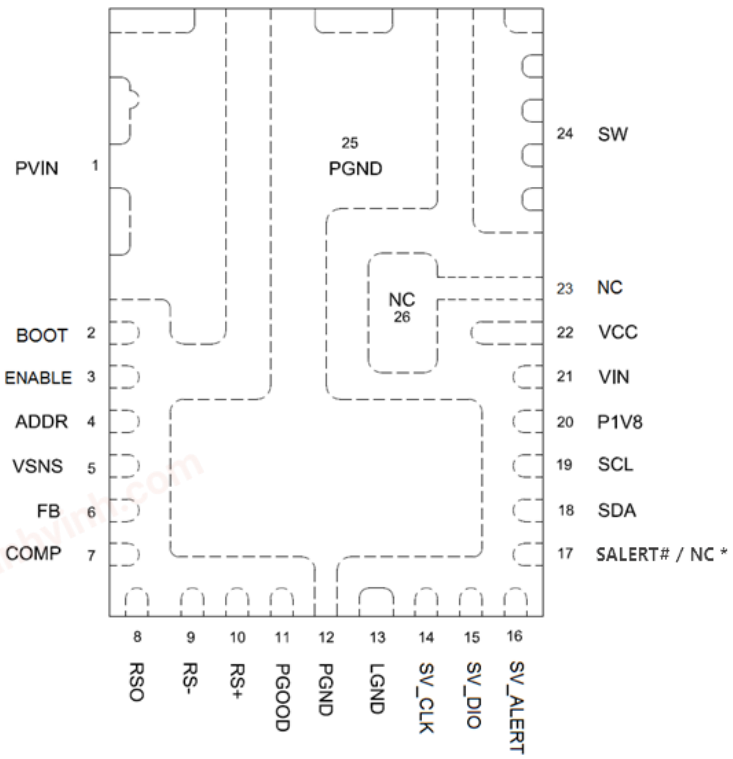

Figure 2: IR38163/363/165/365 Package Top View
5mm X 7mm PQFN

*IR38165 and IR38365 do not support PMBus™ and pin 17 is a no connect (NC)

ORDERING INFORMATION

Package	Tape and Reel Qty	Part Number	Description
PQFN	4000	IR38163MTRPbF	30A Buck Regulator with SVID and PMBus™ for Vccio
PQFN	4000	IR38363MTRPbF	15A Buck Regulator with SVID and PMBus™ for Vmcp
PQFN	4000	IR38165MTRPbF	30A Buck Regulator with SVID for Vccio
PQFN	4000	IR38365MTRPbF	15A Buck Regulator with SVID for Vmcp

chanhvinh.com

FUNCTIONAL BLOCK DIAGRAM

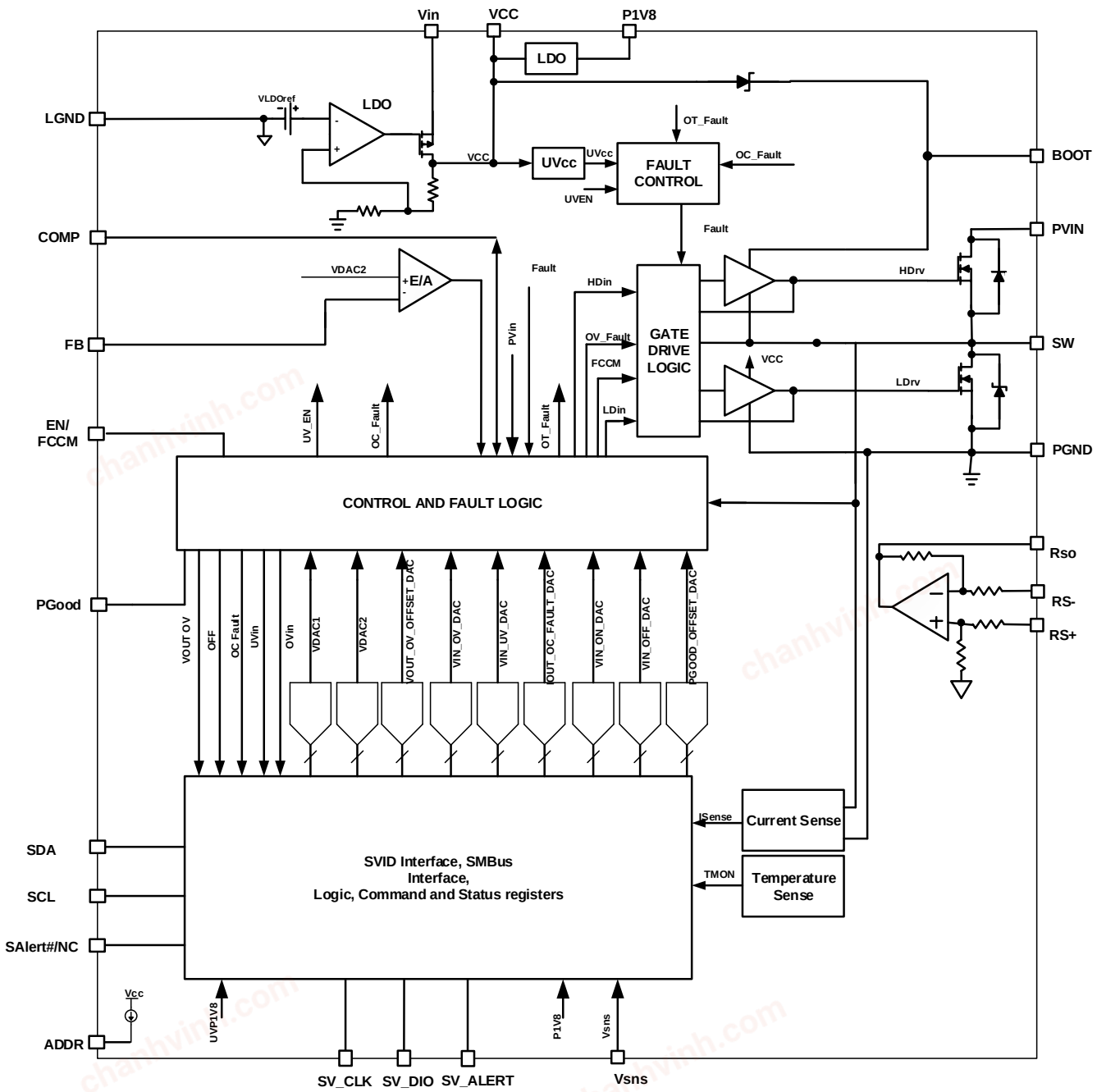

Figure 3: Simplified Block Diagram for IR38163/IR38363/IR38165/IR38365

chanhvinh.com

PIN DESCRIPTIONS

PIN #	PIN NAME	PIN DESCRIPTION
1	PVIN	Input voltage for power stage. Bypass capacitors between PVin and PGND should be connected very close to this pin and PGND. Typical applications use four 22 uF input capacitors and a low ESR, low ESL 0.1uF decoupling capacitor in a 0603/0402 case size. A 3.3nF capacitor may also be used in parallel with these input capacitors to reduce ringing on the Sw node.
2	Boot	Supply voltage for high side driver. A 0.1uF capacitor should be connected from this pin to the Sw pin. It is recommended to provide a placement for a 0 ohm resistor in series with the capacitor. For applications in which PVin>14V, a 1 ohm resistor is required in series with boot capacitor.
3	ENABLE	Enable pin to turn on and off the IC
4	ADDR	A resistor should be connected from this pin to LGnd to set the PMBus™ address offset for the device. It is recommended to provide a placement for a 10 nF capacitor in parallel with the offset resistor.
5	Vsns	Sense pin for OVP and PGood. Typically connected to a local Vout capacitor at the output of the inductor.
6	FB	Inverting input to the error amplifier. This pin is connected directly to the output of the regulator or to the output of the remote sense amplifier, via resistor divider to set the output voltage and provide feedback to the error amplifier.
7	COMP	Output of error amplifier. An external resistor and capacitor network is typically connected from this pin to FB to provide loop compensation.
8	RSo	Remote Sense Amplifier Output. When the remote sense amplifier is used, this is connected to the feedback compensation network
9	RS-	Remote Sense Amplifier input. Connect to ground at the load.
10	RS+	Remote Sense Amplifier input. Connect to output at the load.
11	PGood	Power Good status pin. Output is open drain. Connect a pull up resistor from this pin to VCC. If the power good voltage before VCC UVLO needs to be limited to < 500 mV, use a 49.9K pullup, otherwise a 4.99K pullup will suffice.
12,25	PGND	Power ground. This pin should be connected to the system's power ground plane. Bypass capacitors between PVin and PGND should be connected very close to PVIN pin (pin 1) and this pin.
13	LGND	Signal ground for internal reference and control circuitry. This should be connected to the PGnd plane at a quiet location using a single point connection.
14	SV_CLK	SVID CLK line. This is pulled up to VDDIO/VCCIO voltage. It is recommended to provide a placement for a 0603 resistor between the pin and the pullup resistor
15	SV_DIO	SVID Data line. This is pulled up to VDDIO/VCCIO voltage. It is recommended to provide a placement for a 0603 resistor between the pin and the pullup resistor
16	SV_ALERT	SVID Alert line. This is pulled up to VDDIO/VCCIO voltage through a resistor.
17	SAlert#/NC	SMBus Alert line; open drain SMBALERT# pin. This should be pulled up to 3.3V-5V with a 1K-5K resistor. For IR38165 and IR38365, this a no connect pin.
18	SDA	SMBus data serial input/output line. This should be pulled up to 3.3V-5V with a 1K-5K resistor

chanhvinh.com

PIN #	PIN NAME	PIN DESCRIPTION
19	SCL	SMBus clock line. This should be pulled up to 3.3V-5V with a 1K-5K resistor
20	P1V8	This is the supply for the digital circuits; bypass with a 10uF capacitor to PGnd. A 2.2uF capacitor is valid however a10uF capacitor is recommended.
21	Vin	Input Voltage for LDO. A 1 uF capacitor is placed from this pin to PGnd. If the internal bias LDO is used, tie this pin to PVin. If an external bias voltage (typically 5V) is available for Vcc, tie the Vin pin to Vcc.
22	VCC	Bias Voltage for IC and driver section, output of LDO. Add 10 uF bypass cap from this pin to PGnd.
23,26	NC	NC
24	SW	Switch node. This pin is connected to the output inductor.

chanhvinh.com

ABSOLUTE MAXIMUM RATINGS

Stresses beyond these listed under “Absolute Maximum Ratings” may cause permanent damage to the device. These are stress ratings only and functional operation of the device at these or any other conditions beyond those indicated in the operational sections of the specifications are not implied.

PVin, Vin	-0.3V to 25V
VCC	-0.3V to 6V
P1V8	-0.3V to 2 V
SW	-0.3V to 25V (DC), -4V to 25V (AC, 100ns)
BOOT	-0.3V to 31V
BOOT to SW	-0.3V to 6V (DC) (Note 1), -0.3V to 6.5V (AC, 100ns)
PGD, other Input/output pins	-0.3V to 6V (Note 1)
PGND to GND, RS- to GND	-0.3V to + 0.3V
THERMAL INFORMATION	
Junction to Ambient Thermal Resistance Θ_{JA}	11.1 C/W (Note 2)
Junction to case top Thermal Resistance $\theta_{JC(top)}$	18.9 C/W (Note 3)
Junction to PCB Thermal Resistance Θ_{JB}	4.16 C/W (Note 4)
Junction to case top parameter $\Psi_{JT\ (top)}$	0.32 C/W (Note 2)
Storage Temperature Range	-55°C to 150°C
Junction Temperature Range	-40°C to 150°C

(Voltages referenced to GND unless otherwise specified)

Note 1: Must not exceed 6V.
Note 2: Value obtained via thermal simulation under natural convention on a VCCIO demo board. 10 layer, 7”x5.5”x0.072” PCB with 1.5 oz copper at the top and bottom layer. Inner layers 2, 3, 8 and 9 have 1 oz copper and layers 4,5,6,7 have 2 oz copper. Ta = 25C was used for the simulation.
Note 3: PCB from note 2 and package is considered in thermal simulation with Ta=25 ^{0}C. Pin 12 is considered.
Note 4: Only package is considered. Simulation is used with a cold plate that fixes top of package at Ta=25 ^{0}C.

chanhvinh.com

ELECTRICAL SPECIFICATIONS

RECOMMENDED OPERATING CONDITIONS

SYMBOL	DEFINITION	MIN	MAX	UNITS
PVin	Input Bus Voltage	1.5	16*	V
Vin	LDO supply voltage	5.3	16	
VCC	LDO output/Bias supply voltage	4.5	5.5	
Boot to SW	High Side driver gate voltage	4.5	5.5	
VO	Output Voltage	0.5	$0.875*PV_{in}$	
I_O	Output Current	0	30	A
Fs	Switching Frequency	150	1500	kHz
T_J	Junction Temperature	-40	125	°C

* SW Node must not exceed 25V

PARAMETER	SYMBOL	CONDITIONS	MIN	TYP	MAX	UNIT
MOSFET $R_{ds(on)}$						
Top Switch	Rds(on)_Top	$V_{Boot} – V_{SW}$ = 5V, I_D = 30A, Tj = 25°C		2.2		mΩ
Bottom Switch	Rds(on)_Bot	Vcc =5V, I_D = 30A, Tj = 25°C		0.78		
Reference Voltage						
Accuracy $0^0C<Tj<85^0C$		1.25V<V_{FB}<2.555V VOUT_SCALE_LOOP=1;	-1		+1	%
		0.75V<V_{FB}<1.25V VOUT_SCALE_LOOP=1;	-0.75		+0.75	
		0.45V<V_{FB}<0.75V VOUT_SCALE_LOOP=1;	-0.5		+0.5	%
Accuracy $-40^0C<Tj<125^0C$		1.25V<V_{FB}<2.555V VOUT_SCALE_LOOP=1;	-1.6		+1.6	%
		0.75V<V_{FB}<1.25V VOUT_SCALE_LOOP=1;	-1.0		+1.0	%
		0.45V<V_{FB}<0.75V VOUT_SCALE_LOOP=1;	-2.0		+2.0	%
Supply Current						
PVin range (using external Vcc=5V)				1.5-16		V
Vin range (using internal LDO)		Fsw=600kHz		5.3-16		V

chanhvinh.com

PARAMETER	SYMBOL	CONDITIONS	MIN	TYP	MAX	UNIT
		Fsw=1.5MHz		5.5-16		
Vin range (when Vin=Vcc)			4.5	5.0	5.5	V
V_{in} Supply Current (Standby) (internal Vcc)	$I_{in(Standby)}$	Enable low, No Switching, Vin=16V, low power mode enabled		2.7	4	mA
V_{in} Supply Current (Dyn)(internal Vcc)	$I_{in(Dyn)}$	Enable high, Fs = 600kHz, Vin=16V		39	50	mA
VCC Supply Current (Standby)(external Vcc)	$I_{cc(Standby)}$	Enable low, No Switching, Vcc=5.5V, low power mode enabled		2.7	5	mA
VCC Supply Current (Dyn)(external Vcc)	$I_{cc(Dyn)}$	Enable high, Fs = 600kHz, Vcc=5.5V		39	50	mA
Under Voltage Lockout						
VCC – Start – Threshold	VCC_UVLO_Start	VCC Rising Trip Level	4.0	4.2	4.4	V
VCC – Stop – Threshold	VCC_UVLO_Stop	VCC Falling Trip Level	3.7	3.9	4.1	
Enable – Start – Threshold	Enable_UVLO_Start	Supply ramping up	0.55	0.6	0.65	V
Enable – Stop – Threshold	Enable_UVLO_Stop	Supply ramping down	0.35	0.4	0.45	
Enable leakage current	Ien	Enable=5.5V			1	uA
Oscillator						
Ramp Amplitude	Vramp	PVin=5V, D=Dmax, Note 2		0.71		Vp-p
		PVin=12V, D=Dmax, Note 2		1.84		
		PVin=16V,D=Dmax, Note 2		2.46		
Ramp Offset	Ramp (os)	Note 2		0.22		V
Min Pulse Width	Dmin (ctrl)	Note 2		35	50	ns
Fixed Off Time		Note 2 Fs=1.5MHz		100	150	ns
Max Duty Cycle	Dmax	Fs=400kHz	86	87.5	89	%
Error Amplifier						
Input Bias Current	IFb(E/A)		-0.5		+0.5	µA
Sink Current	Isink(E/A)		0.6	1.1	1.8	mA
Source Current	Isource(E/A)		8	13	25	mA
Slew Rate	SR	Note 2	7	12	20	V/µs
Gain-Bandwidth Product	GBWP	Note 2	20	30	40	MHz
DC Gain	Gain	Note 2	100	110	120	dB
Maximum Voltage	Vmax(E/A)		2.8	3.9	4.3	V
Minimum Voltage	Vmin(E/A)				100	mV

chanhvinh.com

PARAMETER	SYMBOL	CONDITIONS	MIN	TYP	MAX	UNIT
Remote Sense Differential Amplifier						
Unity Gain Bandwidth	BW_RS	Note 2	3	6.4		MHz
DC Gain	Gain_RS	Note 2		110		dB
Offset Voltage	Offset_RS	0.5V<RS+<2.555V, 4kOhm load $27^0C<Tj<85^0C$	-1.6	0	1.6	mV
		0.5V<RS+<2.555V, 4kOhm load $-40^0C<Tj<125^0C$	-3		3	
Source Current	Isource_RS	V_RSO=1.5V, V_RSP=4V	11		16	mA
Sink Current	Isink_RS		0.4	1	2	mA
Slew Rate	Slew_RS	Note 2, Cload = 100pF	2	4	8	V/µs
RS+ input impedance	Rin_RS+		36	55	74	Kohm
RS- input impedance	Rin_RS-	Note 2	36	55	74	Kohm
Maximum Voltage	Vmax_RS	V(VCC) – V(RS+)	0.5	1	1.5	V
Minimum Voltage	Min_RS			4	20	mV
Bootstrap Diode						
Forward Voltage		I(Boot) = 40mA	150	300	450	mV
Switch Node						
SW Leakage Current	Lsw	SW = 0V, Enable = 0V			1	µA
	Isw_En	SW=0; Enable= 2V		18		
Internal Regulator (VCC/LDO)						
Output Voltage	VCC	Vin(min) = 5.5V, Io=0mA, Cload = 10uF	4.8	5.15	5.4	V
		Vin(min) = 5.5V, Io=70mA, Cload = 10uF	4.5	4.99	5.2	
VCC dropout	VCC_drop	Io=0-70mA, Cload = 10uF, Vin=5.1V			0.7	V
Short Circuit Current	Ishort			110		mA
Internal Regulator (P1V8)						
Output Voltage	P1V8	Vin(min) = 4.5V, Io = 0-1mA, Cload = 2.2uF	1.795	1.83	1.905	V
1.8V UVLO Start	P1V8_UVLO_Start	1.8V Rising Trip Level	1.66	1.72	1.78	V
1.8V UVLO Stop	P1V8_UVLO_Stop	1.8V Falling Trip Level	1.59	1.63	1.68	V
Adaptive On time Mode						
Zero-crossing comparator threshold	ZC_Vth		-4	-1	2	mV
Zero-crossing comparator delay	ZC_Tdly			8/Fs		S

chanhvinh.com

PARAMETER	SYMBOL	CONDITIONS	MIN	TYP	MAX	UNIT
FAULTS						
Power Good						
Power Good High threshold	Power_Good_High	Vsns rising, VOUT_SCALE_LOOP=1, Vout=0.5V, PMBus™ mode		0.45		V
Power Good Low Threshold	Power_Good_Low	Vsns falling, VOUT_SCALE_LOOP=1, Vout=0.5V, PMBus™ mode		0.43		V
Power Good High Threshold Rising Delay	TPDLY	Vsns rising, Vsns > Power_Good_High		0		ms
Power Good Low Threshold Falling delay	VPG_low_Dly	Vsns falling, Vsns < Power_Good_Low	150	175	200	µs
PGood Voltage Low	PG (voltage)	I_{PGood} = -5mA			0.5	V
Over Voltage Protection (OVP)						
OVP Trip Threshold	OVP (trip)	Vsns rising, VOUT_SCALE_LOOP=1, Vout=0.5V	0.57	0.605	0.63	V
OVP comparator Hysteresis	OVP (hyst)	Vsns falling, VOUT_SCALE_LOOP=1, Vout=0.5V	20	30	40	mV
OVP Fault Prop Delay	OVP (delay)	Vsns rising, Vsns-OVP(trip)>200 mV		200		ns
Over-Current Protection						
OC Trip Current	I_{TRIP} IR38163/165	OC limit=40, VCC = 5.05V, T_j=25^{0}C	36	40	44	A
		OC limit=16A, VCC = 5.05V, T_j=25^{0}C	12.5	16	19.5	A
	I_{TRIP} IR38363/365	OC limit=20A, VCC = 5.05V, T_j=25^{0}C	16.5	20	23.5	A
		OC limit=16A, VCC = 5.05V, T_j=25^{0}C	12.5	16	19.5	A
Hiccup blanking time	Tblk_Hiccup	Note 2		20		ms
Thermal Shutdown						
Thermal Shutdown		Note 2		145		°C
Hysteresis		Note 2		25		°C
Input Over-Voltage Protection						
PVin overvoltage threshold	$PVin_{OV}$		22	23.7	25	V
PVin overvoltage Hysteresis	$PVin_{ov\ hyst}$			2.4		V

chanhvinh.com

PARAMETER	SYMBOL	CONDITIONS	MIN	TYP	MAX	UNIT
MONITORING AND REPORTING						
Bus Speed[1]				100	400	kHz
Iout & Vout filter				78		Hz
Iout & Vout Update rate				31.25		kHz
Vin & Temperature filter				78		Hz
Vin & Temperature update rate				31.25		kHz
Output Voltage Reporting						
Resolution	N_{Vout}	Note 2		1/256		V
Lowest reported Vout	Vomon_low	Vsns=0V		0		V
Highest reported Vout	Vomon_high	VOUT_SCALE_LOOP=1, Vsns=3.3V		3.3		V
		VOUT_SCALE_LOOP=0.5, Vsns=3.3V		6.6		V
		VOUT_SCALE_LOOP=0.25, Vsns=3.3V		13.2		V
		VOUT_SCALE_LOOP=0.125 , Vsns=3.3V		26.4		V
Vout reporting accuracy		0^0C to 85^0C, 4.5V<Vcc<5.5V, 1V<Vsns≤ 1.5V VOUT_SCALE_LOOP=1		+/- 0.6		%
		0^0C to 85^0C, 4.5V<Vcc<5.5V, Vsns> 1.5V VOUT_SCALE_LOOP=1		+/-1		
		0^0C to 125^0C, 4.5V<Vcc<5.5V, Vsns>0.9V VOUT_SCALE_LOOP=1		+/- 1.5		
		0^0C to 125^0C, 4.5V<Vcc<5.5V, 0.5V<Vsns<0.9V VOUT_SCALE_LOOP=1		+/-3		
Iout Reporting						
Resolution	N_{Iout}	Note 2		0.0625		A
Iout (digital) monitoring Range	Iout_dig IR38163/165		0		40	A
	Iout_dig IR38363/365		0		20	A
Iout_dig Accuracy	IR38163/165 i2c/PMBus™ mode	0^0C to 125^0C, 4.5V<Vcc<5.5V, 5A < Iout <30A		+/-5		%
	IR38363/365 i2c/PMBus™ mode	0^0C to 125^0C, 4.5V<Vcc<5.5V,				

chanhvinh.com

PARAMETER	SYMBOL	CONDITIONS	MIN	TYP	MAX	UNIT
		5A < Iout <15A				
	SVID mode IR38163/165/363/365	0^0C to 125^0C, 4.5V<Vcc<5.5V	Intel VR13 spec	Intel VR13 spec	Intel VR13 spec	
Temperature Reporting						
Resolution	N_{Tmon}	Note 2		1		°C
Temperature Monitoring Range	Tmon_dig		-40		150	°C
Thermal shutdown hysteresis		Note 2		25		°C
Input Voltage Reporting						
Resolution	N_{PVin}	Note 2		1/32		V
Monitoring Range	PMBVinmon		0		21	V
Monitoring accuracy		0^0C to 85^0C, 4.5V<Vcc<5.5V, PVin>10V	-1.5		1.5	%
		-40^0C to 125^0C, 4.5V<Vcc<5.5V, PVin>14V	-1.5		1.5	
		-40^0C to 125^0C, 4.5V<Vcc<5.5V, 7V<PVin<14V	-4		4	
PMBus™ Interface Timing Specifications						
SMBus Operating frequency	F_{SMB}				400	kHz
Bus Free time between Start and Stop condition	T_{BUF}		1.3			µs
Hold time after (Repeated) Start Condition. After this period, the first clock is generated.	$T_{HD:STA}$		0.6			µs
Repeated start condition setup time	$T_{SU:STA}$		0.6			µs
Stop condition setup time	$T_{SU:STO}$		0.6			µs
Data Rising Threshold			1.339		1.766	V
Data Falling Threshold			1.048		1.495	V
Clock Rising Threshold			1.339		1.766	V
Clock Falling Threshold			1.048		1.499	V
Data Rising Threshold LVT			0.7		0.9	V

chanhvinh.com

PARAMETER	SYMBOL	CONDITIONS	MIN	TYP	MAX	UNIT
Data Falling Threshold LVT			0.45		0.65	V
Clock Rising Threshold LVT			0.7		0.9	V
Clock Falling Threshold LVT			0.45		0.65	V
Data Hold Time	$T_{HD:DAT}$		300		900	ns
Data Setup Time	$T_{SU:DAT}$		100			ns
Data pulldown resistance			8	11	16	Ω
SALERT# pulldown resistance			9	12	17	Ω
Clock low time out	$T_{TIMEOUT}$		25		35	ms
Clock low period	T_{LOW}		1.3			µs
Clock High Period	T_{HIGH}		0.6		50	µs

Notes

2. Guaranteed by design but not tested in production
3. Guaranteed by statistical correlation, but not tested in production

chanhvinh.com

TYPICAL APPLICATION DIAGRAMS

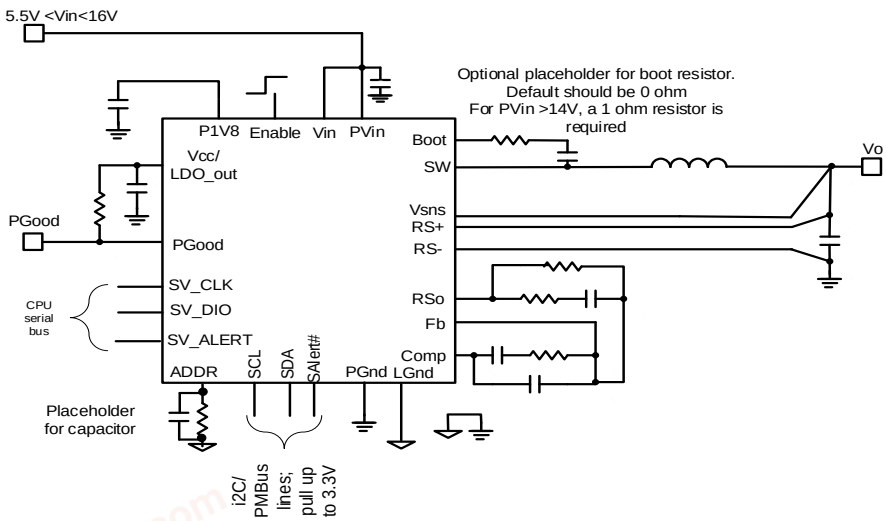

Figure 4: Using the internal LDO, Vo < 2.555V

For applications in which Pvin>14V, a 1 ohm resistor is required in series with the boot capacitor.

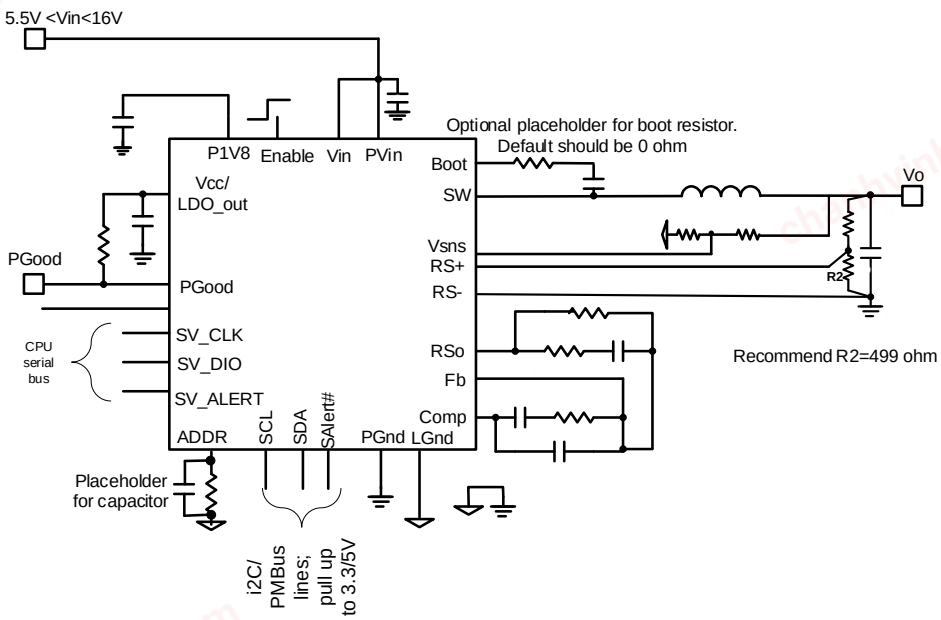

Figure 5: Using the internal LDO, Vo > 2.555V

chanhvinh.com

TYPICAL APPLICATION DIAGRAMS

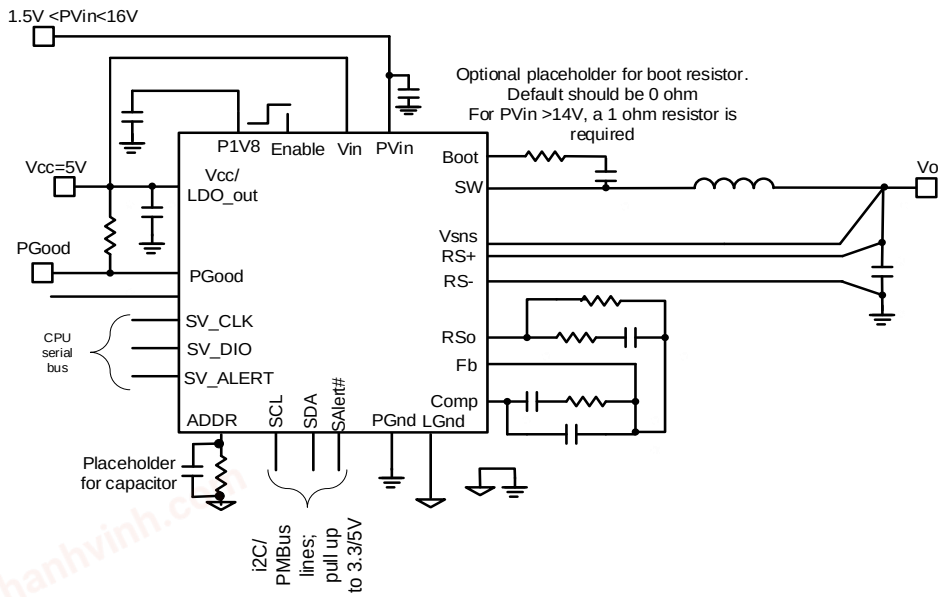

Figure 6: Using external Vcc, Vo<2.555V

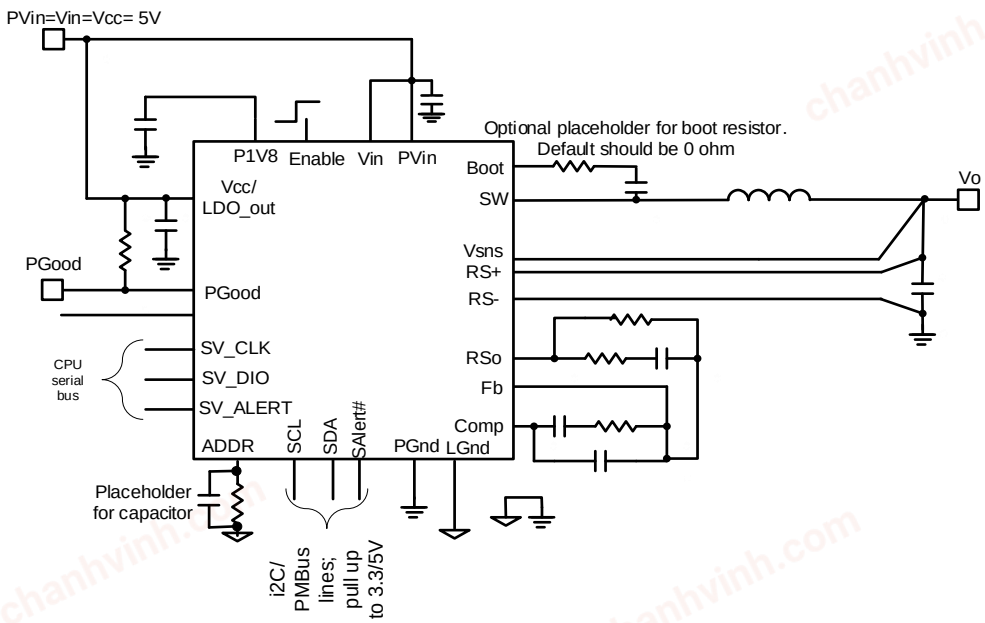

Figure 7: Single 5V application, Vo<2.555V

chanhvinh.com

TYPICAL OPERATING CHARACTERISTICS (-40°C TO +125°C)

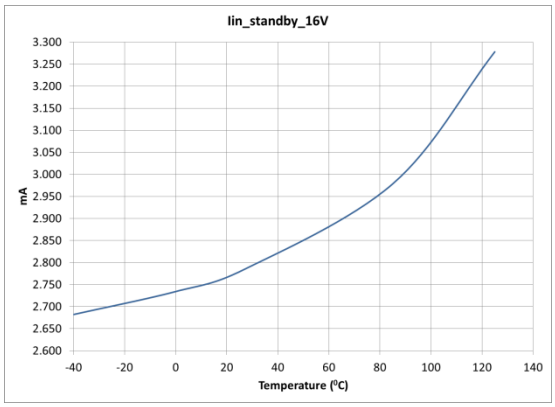

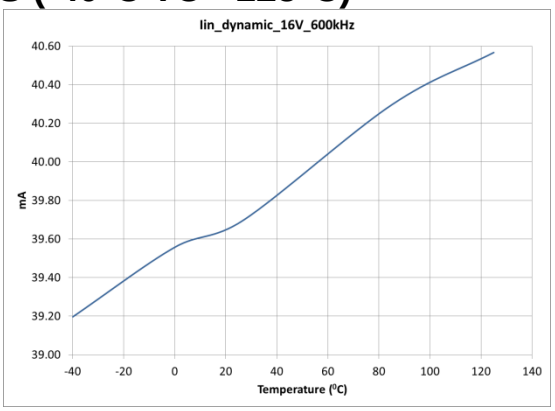

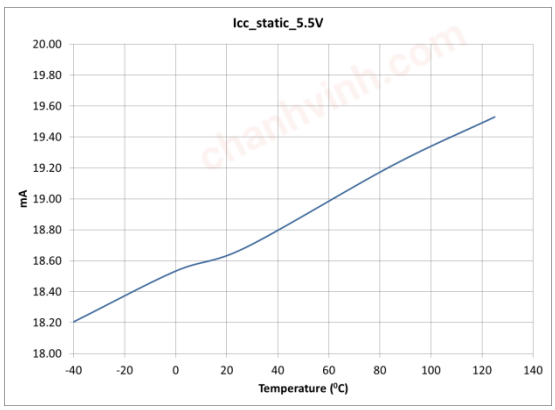

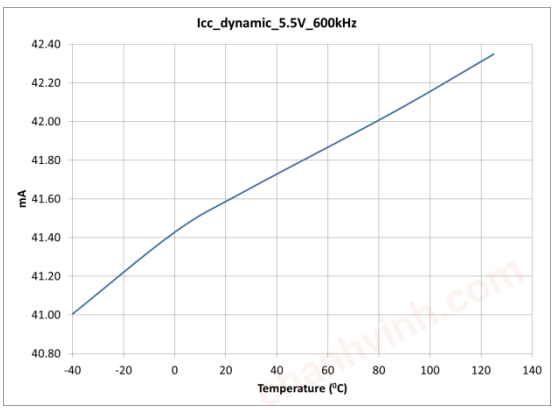

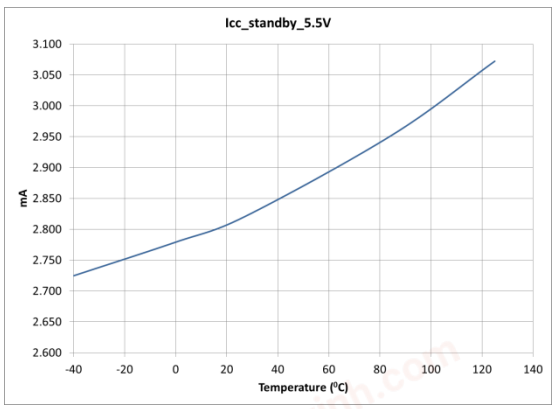

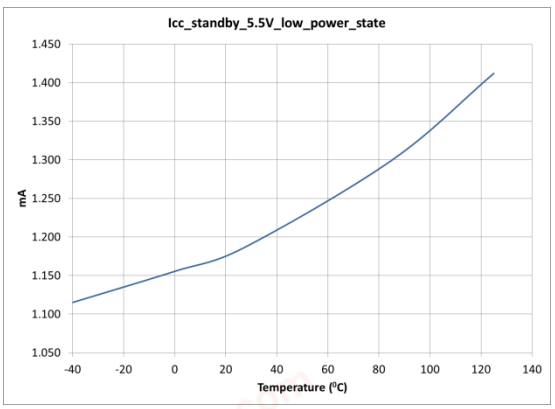

chanhvinh.com

TYPICAL OPERATING CHARACTERISTICS (-40°C TO +125°C)

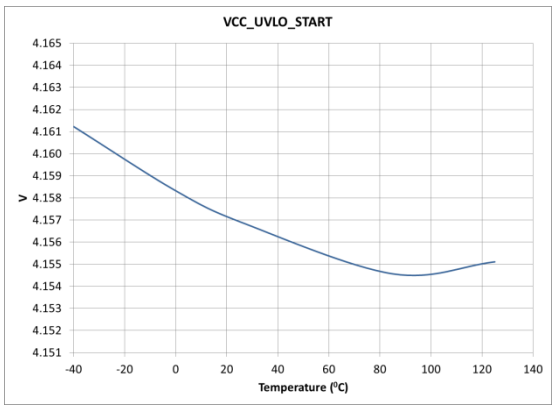

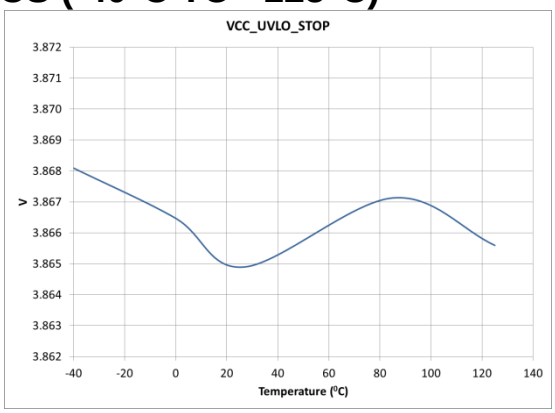

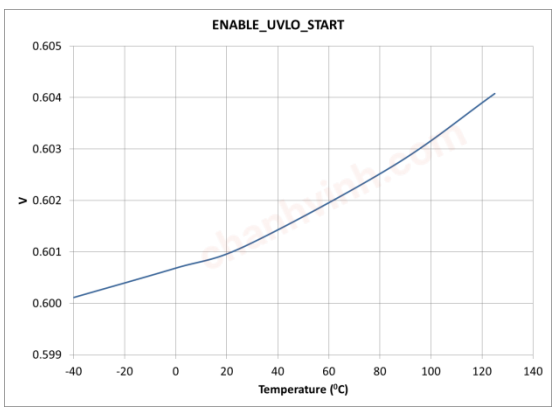

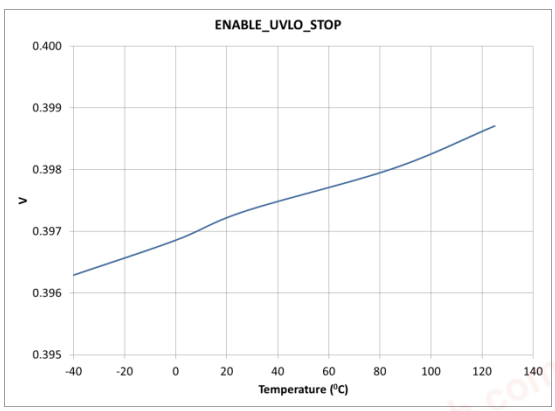

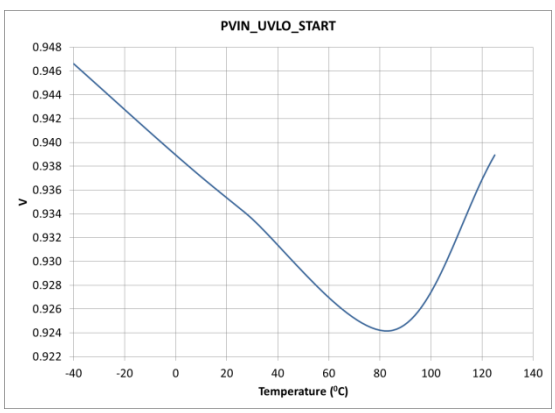

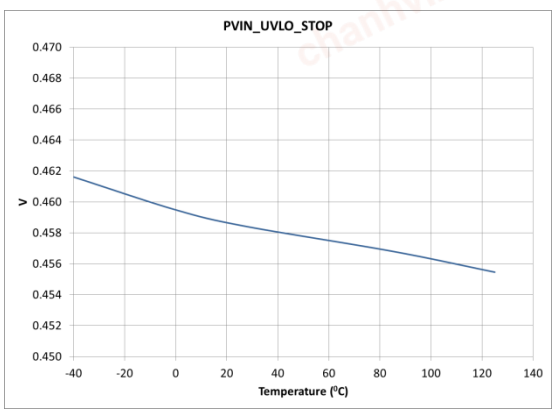

chanhvinh.com

TYPICAL OPERATING CHARACTERISTICS (-40°C TO +125°C)

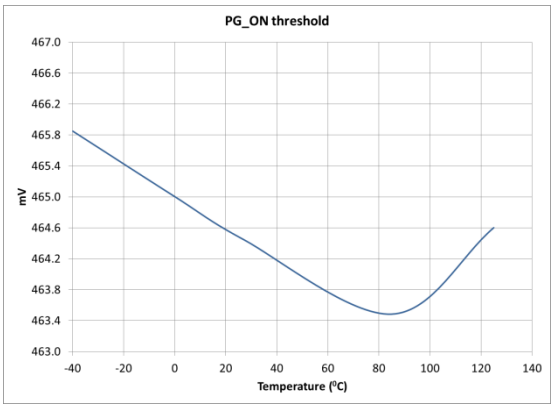

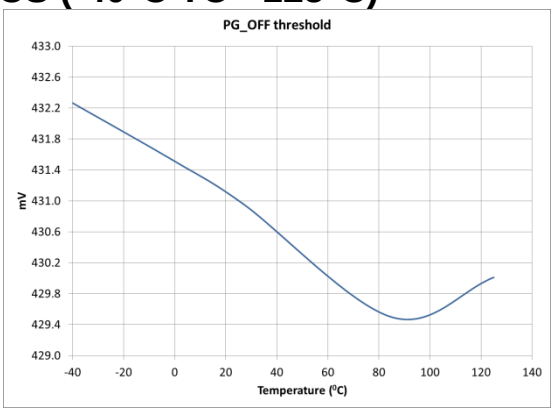

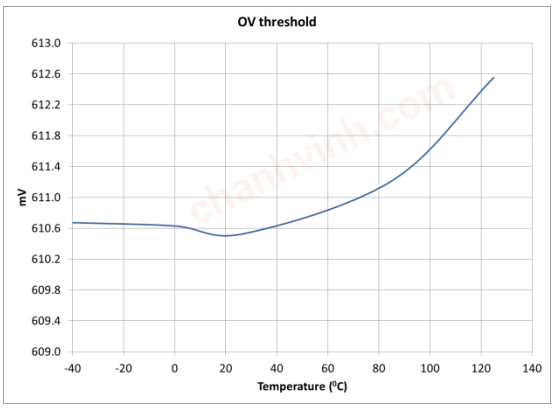

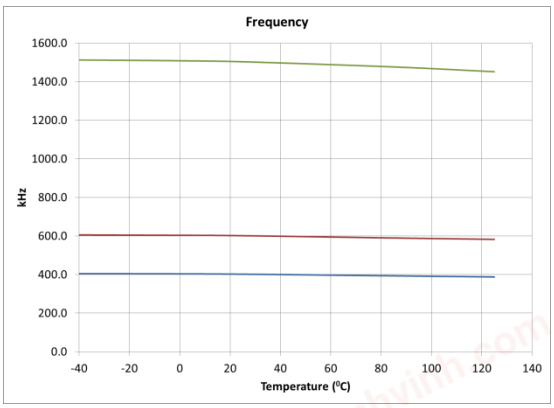

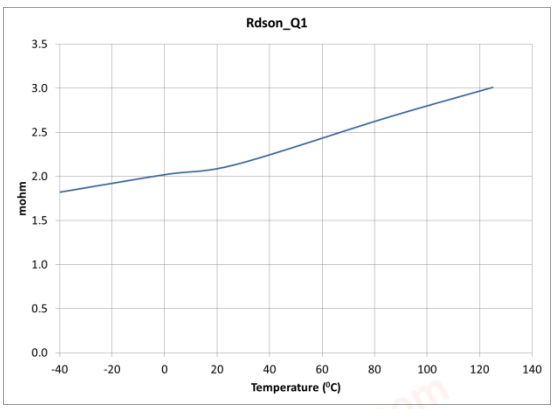

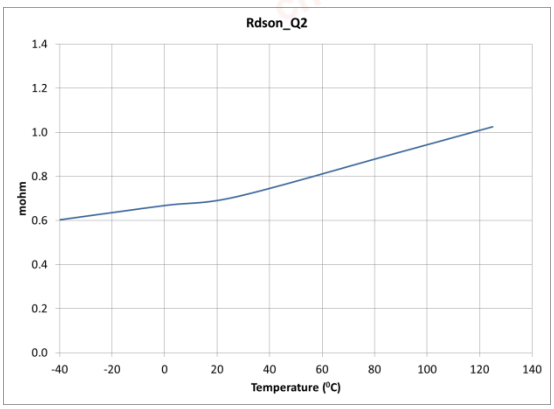

chanhvinh.com

TYPICAL OPERATING CHARACTERISTICS (-40°C TO +125°C)

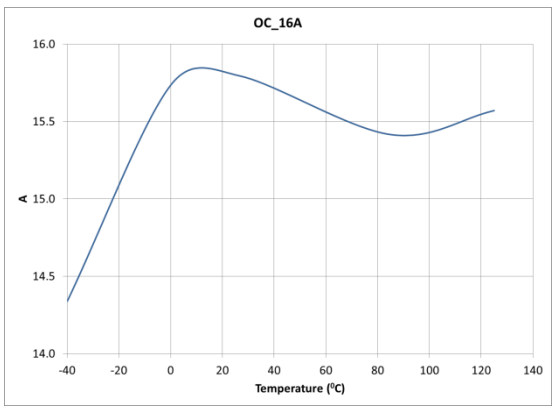

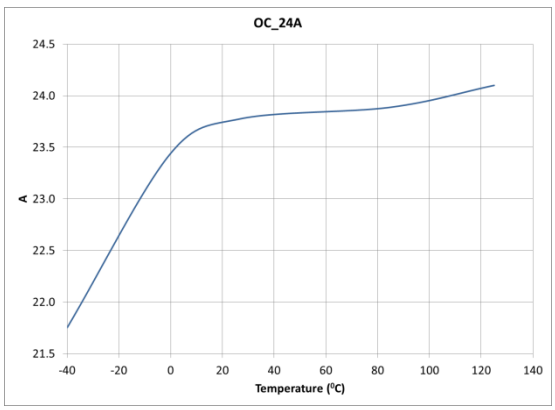

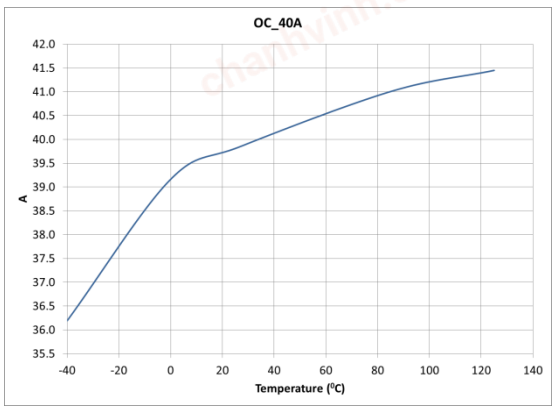

chanhvinh.com

IOUT REPORTING CURVES (SVID)

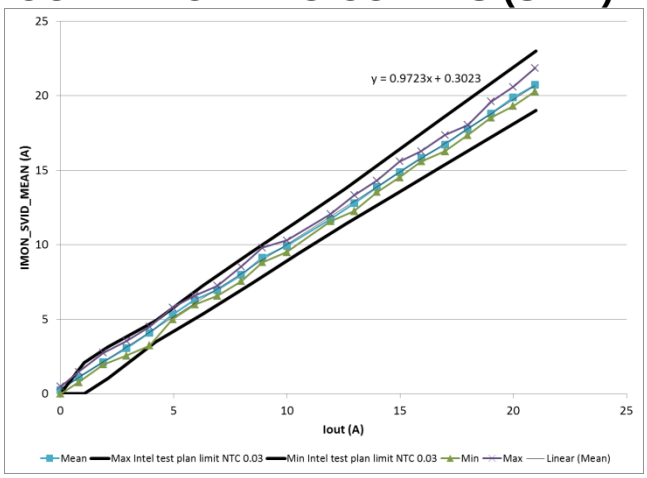

SVID readings with typical reporting gain

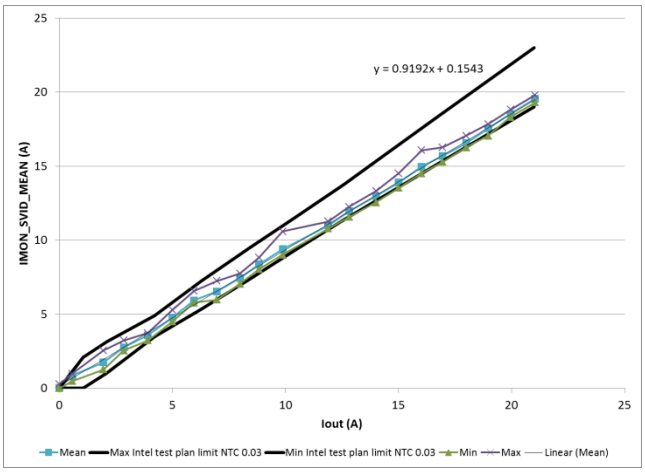

SVID readings with minimum reporting gain

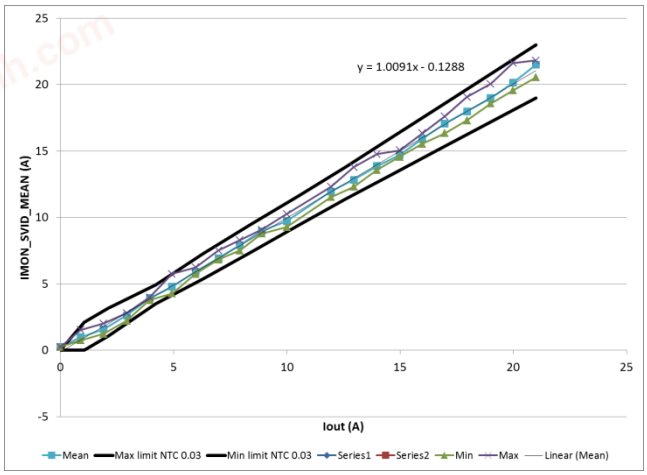

SVID readings with maximum reporting gain

The Mean, min and max within each plot represent the variability in the SVID reading on a single part, due to noise. The table below provides a summary of measurement gain and offset taken on a statistically significant sample of parts.

	Gain	Offset
Average	0.954	0.137
Standard deviation	0.019	0.257
Min	0.919	-0.465
Max	1.009	0.95

chanhvinh.com

TYPICAL EFFICIENCY AND POWER LOSS CURVES

PVin = Vin = 12V, VCC = 5V, Io=0-30A, Fs= 600 kHz, Room Temperature, No Air Flow. Note that the losses of the inductor, input and output capacitors are also considered in the efficiency and power loss curves. The table below shows the indicator used for each of the output voltages in the efficiency measurement.

VOUT (V)	LOUT (uH)	P/N	DCR (mΩ)
0.8	0.15	HCB138380D-151 (Delta)	0.15
1	0.15	HCB138380D-151 (Delta)	0.15
1.2	0.15	HCB138380D-151 (Delta)	0.15
1.5	0.15	HCB138380D-151 (Delta)	0.15
1.8	0.15	HCB138380D-101 (Delta)	0.15
3.3	0.32	FP1308R3-R32-R (Cooper)	0.32
5	0.32	FP1308R3-R32-R (Cooper)	0.32

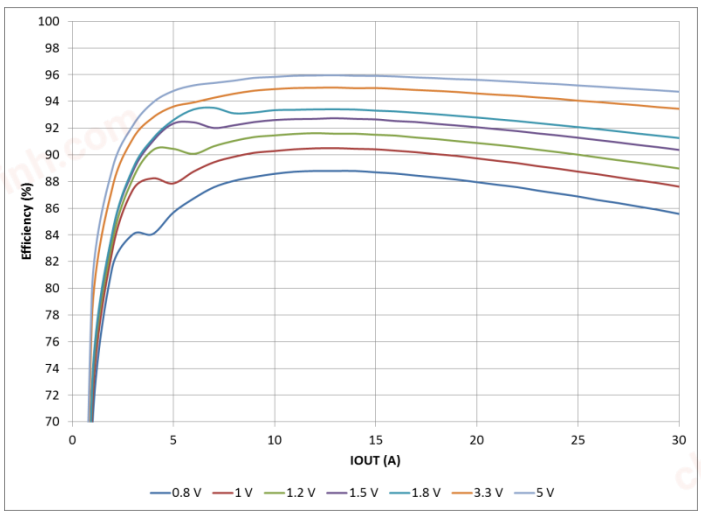

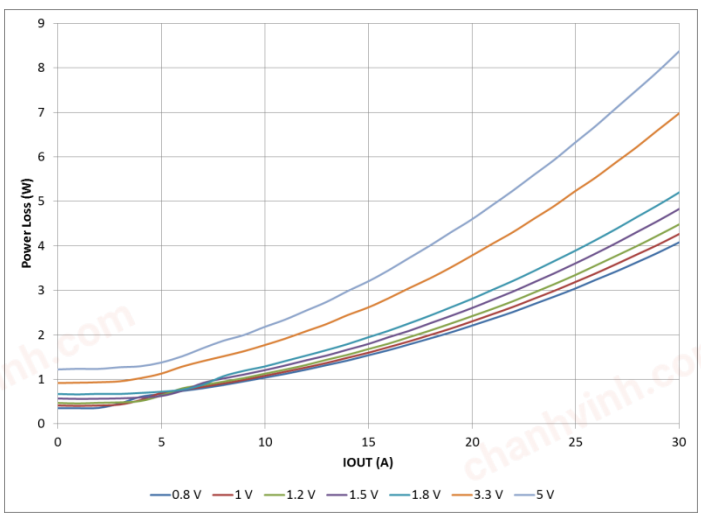

chanhvinh.com

TYPICAL EFFICIENCY AND POWER LOSS CURVES

PVin = Vin = 12V, Internal LDO, Io=0-30A, Fs= 600 kHz, Room Temperature, No Air Flow. Note that the losses of the inductor, input and output capacitors are also considered in the efficiency and power loss curves. The table below shows the indicator used for each of the output voltages in the efficiency measurement.

VOUT (V)	LOUT (uH)	P/N	DCR (mΩ)
0.8	0.15	HCB178380D-151 (Delta)	0.15
1	0.15	HCB138380D-151 (Delta)	0.15
1.2	0.15	HCB138380D-151 (Delta)	0.15
1.5	0.15	HCB138380D-151 (Delta)	0.15
1.8	0.15	HCB138380D-101 (Delta)	0.15
3.3	0.32	FP1308R3-R32-R (Cooper)	0.32
5	0.32	FP1308R3-R32-R (Cooper)	0.32

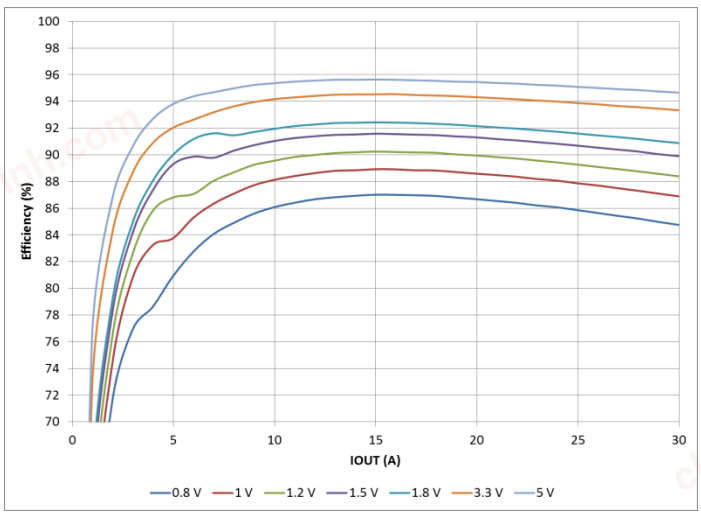

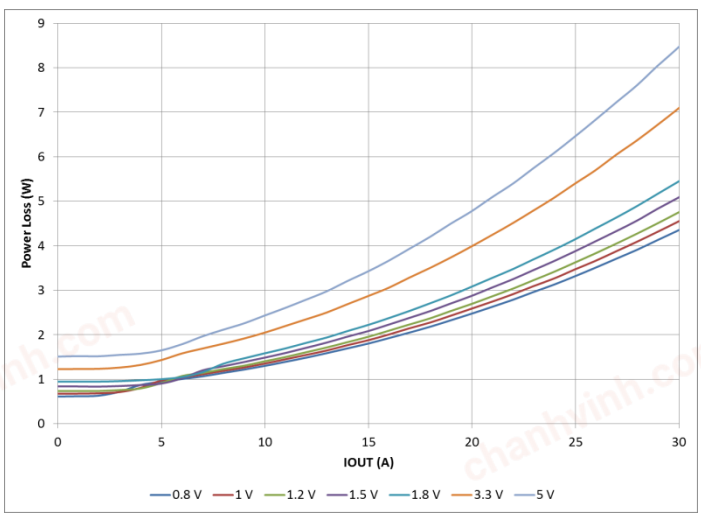

chanhvinh.com

TYPICAL EFFICIENCY AND POWER LOSS CURVES

PVin = Vin = VCC = 5V, Io=0-30A, Fs= 600 kHz, Room Temperature, No Air Flow. Note that the losses of the inductor, input and output capacitors are also considered in the efficiency and power loss curves. The table below shows the indicator used for each of the output voltages in the efficiency measurement.

VOUT (V)	LOUT (uH)	P/N	DCR (mΩ)
0.8	0.1	HCB138380D-101 (Delta)	0.15
1	0.1	HCB138380D-101 (Delta)	0.15
1.2	0.15	HCB138380D-101 (Delta)	0.15
1.5	0.15	HCB138380D-151 (Delta)	0.15
1.8	0.15	HCB138380D-151 (Delta)	0.15

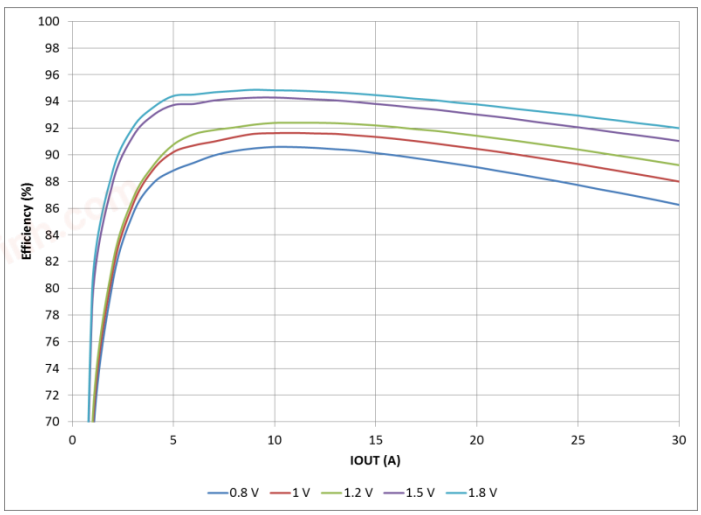

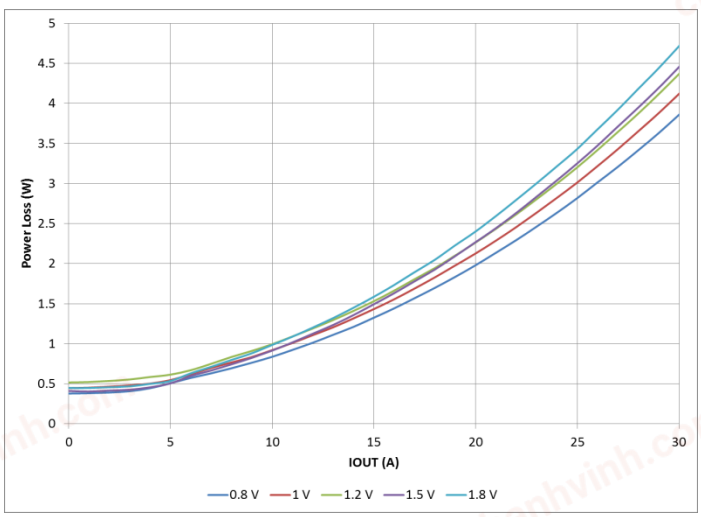

chanhvinh.com

THERMAL DERATING CURVES

The measurements were done on a standard evaluation kit demo board. The PCB is 7.0” x 5.5” x 0.072” with 10-layers, FR4 material and 2 oz. copper. The conditions used were, PVin = Vin = 12V, Internal LDO, Io=30A, Fs= 978 kHz.

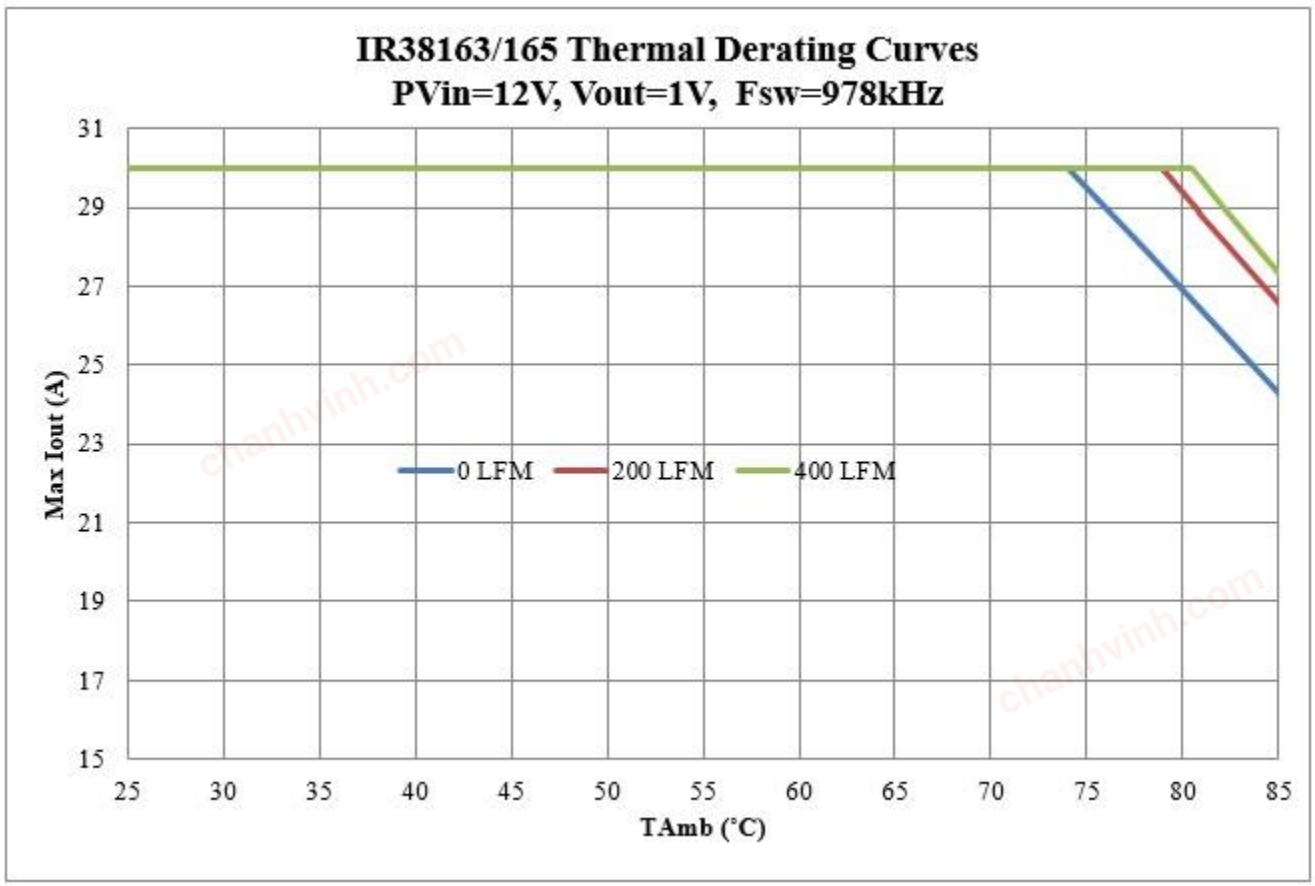

chanhvinh.com

THEORY OF OPERATION

DESCRIPTION

The IR38163 and IR38165 are 30A rated synchronous buck converters that support PMBus™ and I2C digital interfaces respectively. The IR38363 and IR38365 are the corresponding 15A rated versions. All the four devices in this family of OptiMOS™ IPOL devices are Intel SVID compliant and can support VR12.5 as well as VR13. They use an externally compensated fast, analog, PWM voltage mode control scheme to provide good noise immunity as well as fast dynamic response in a wide variety of applications. At the same time, the digital communication interfaces allow complete configurability of output setting and fault functions, as well as telemetry.

The switching frequency is programmable from 150 kHz to 1.5 MHz and provides the capability of optimizing the design in terms of size and performance. It is recommended to operate at 500 kHz or higher.

These devices provide precisely regulated output voltages from 0.5V to 0.875*PVin programmed via two external resistors or through the communication interfaces. They operate with an internal bias supply (LDO), typically 5.2V. This allows operation with a single supply. The output of this LDO is brought out at the Vcc pin and must be bypassed to the system power ground with a 10 uF decoupling capacitor. The Vcc pin may also be connected to the Vin pin, and an external Vcc supply between 4.5V and 5.5V may be used, allowing an extended operating bus voltage (PVin) range from 1.5V to 16V.

The device utilizes the on-resistance of the low side MOSFET (synchronous MOSFET) as current sense element. This method enhances the converter's efficiency and reduces cost by eliminating the need for external current sense resistor.

These devices includes two low $R_{ds(on)}$ MOSFETs using Infineon's OptiMOS™ technology. These are specifically designed for low duty cycle, high efficiency applications.

DEVICE POWER-UP AND INITIALIZATION

During the power-up sequence, when Vin is brought up, the internal LDO converts it to a regulated 5.2V at Vcc. There is another LDO which further converts this down to 1.8V to supply the internal digital circuitry. An under-voltage lockout circuit monitors the voltage of VCC pin and the P1V8 pin, and holds the Power-on-reset (POR) low until these voltages exceed their thresholds and the internal 48 MHz oscillator is stable. When the device comes out of reset, it initializes a multiple times programmable (MTP) memory load cycle, where the contents of the MTP are loaded into the working registers. Once the registers are loaded from MTP, the designer can use PMBus™ commands to re-configure the various parameters to suit the specific VR design requirements if desired, irrespective of the status of Enable.

The typical default configuration utilizes the internal LDO to supply the VCC rail when PVin is brought up. For this configuration power conversion is enabled only when the Enable pin voltage exceeds its under voltage threshold, the PVin bus voltage exceeds its under voltage threshold, the contents of the MTP have been fully loaded into the working registers and the device address has been read. The initialization sequence is shown in Figure 8. Another common default configuration uses an external power supply for the VCC rail. While in this configuration it is recommended to ensure the VCC rail reaches its target voltage prior the enable signal goes high.

Additional options are available to enable the device power conversion through software and these options may be configured to override the default by using the I2C interface or PMBus™. For further details see the UN0075 IR3816x_IR3826x_IR3836x_PMBus™ commandset user note.

chanhvinh.com

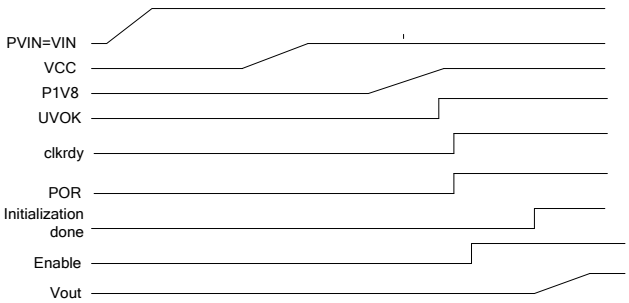

Figure 8: Initialization sequence showing PVin, Vin, Vcc, 1.8V, Enable and Vout signals as well as the internal logic signals

I2C AND PMBUS™ COMMUNICATION

All the devices in this family have two 7-bit registers that are used to set the base I2C address and base PMBus™ address of the device, as shown below in Table 1.

Table 1: Registers used to set device base address

Register	Description
I2c_address[6:0]	The chip I2C address. An address of 0 will disable I2C communication. Note that disabling I2C does not disable PMBus™.
PMBus™_address[6:0]	The chip PMBus™ address. An address of 0 will disable PMBus™ communication. Note that disabling PMBus™ does not disable I2C.

In addition, a resistor may be connected between the ADDR and LGND pins to set an offset from the default preconfigured I2C address (0x10) /PMBus™ address (0x40) in the MTP. Up to 16 different offsets can be set, allowing 16 devices with unique addresses in a single system. This offset, and hence, the device address, is read by the internal 10 bit ADC during the initialization sequence.

Table 2 below provides the resistor values needed to set the 16 offsets from the base address.

chanhvinh.com

Table 2 : Address offset vs. External Resistor(R_{ADDR})

ADDR Resistor (Ohm)	Address Offset
499	+0
1050	+1
1540	+2
2050	+3
2610	+4
3240	+5
3830	+6
4530	+7
5230	+8
6040	+9
6980	+10
7870	+11
8870	+12
9760	+13
10700	+14
>11800	+15

The device will then respond to I2C/PMBus™ commands sent to this address. There is also a register bit *i2c_disable_addr_offset* that may be set in order to instruct the device to ignore the resistor offset for both i2c and PMBus™. If this bit is set, the device will always respond to commands sent to the base address.

MODES FOR SETTING OUTPUT VOLTAGES

These devices provide a configuration bit that allows the user to choose between PMBus™ and VID modes. When this bit is set, the output voltage will ramp to the configured boot voltage and subsequently, respond to voltage set commands issued by the CPU on the Serial VID (SVID) interface. The VID tables for 5mV and 10mV VID steps are shown in the tables below. A VID code of 0 corresponds to 0V as well as the regulator shutdown code in SVID mode. Vboot which is utilized in the SVID mode should never be set to 0 V as this will shutdown the regulator. When this bit is zero, the regulation is determined by the output voltage set by the PMBus™ commands (for the IR38163 and IR38363) or by the corresponding MTP registers (for the IR38165 and IR38365). It should be noted that irrespective of the mode used to set the output voltage, telemetry information always remains available on both the communications busses.

chanhvinh.com

Table 3: Intel 5mV VID table

VID (Hex)	Voltage (V)	VID (Hex)	Voltage (V)	VID (Hex)	Voltage (V)	VID (Hex)	Voltage (V)	VID (Hex)	Voltage (V)
FF	1.52	C5	1.23	91	0.97	57	0.68	2F	0.48
FE	1.515	C4	1.225	90	0.965	56	0.675	2E	0.475
FD	1.51	C3	1.22	8F	0.96	55	0.67	2D	0.47
FC	1.505	C2	1.215	8E	0.955	54	0.665	2C	0.465
FB	1.5	C1	1.21	8D	0.95	53	0.66	2B	0.46
FA	1.495	C0	1.205	8C	0.945	52	0.655	2A	0.455
F9	1.49	BF	1.2	8B	0.94	51	0.65	29	0.45
F8	1.485	BE	1.195	8A	0.935	50	0.645	28	0.445
F7	1.48	BD	1.19	89	0.93	4F	0.64	27	0.44
F6	1.475	BC	1.185	88	0.925	4E	0.635	26	0.435
F5	1.47	BB	1.18	87	0.92	4D	0.63	25	0.43
F4	1.465	BA	1.175	86	0.915	4C	0.625	24	0.425
F3	1.46	B9	1.17	85	0.91	4B	0.62	23	0.42
F2	1.455	B8	1.165	84	0.905	4A	0.615	22	0.415
F1	1.45	B7	1.16	83	0.9	49	0.61	21	0.41
F0	1.445	B6	1.155	82	0.895	48	0.605	20	0.405
EF	1.44	BB	1.18	81	0.89	47	0.6	1F	0.4
EE	1.435	BA	1.175	80	0.885	58	0.685	1E	N/A
ED	1.43	B9	1.17	7F	0.88	57	0.68	1D	N/A
EC	1.425	B8	1.165	7E	0.875	56	0.675	1C	N/A
EB	1.42	B7	1.16	7D	0.87	55	0.67	1B	N/A
EA	1.415	B6	1.155	7C	0.865	54	0.665	1A	N/A
E9	1.41	B5	1.15	7B	0.86	53	0.66	19	N/A
E8	1.405	B4	1.145	7A	0.855	52	0.655	18	N/A
E7	1.4	B3	1.14	79	0.85	51	0.65	17	N/A
E6	1.395	B2	1.135	78	0.845	50	0.645	16	N/A
E5	1.39	B1	1.13	77	0.84	4F	0.64	15	N/A
E4	1.385	B0	1.125	76	0.835	4E	0.635	14	N/A
E3	1.38	AF	1.12	75	0.83	4D	0.63	13	N/A
E2	1.375	AE	1.115	74	0.825	4C	0.625	12	N/A
E1	1.37	AD	1.11	73	0.82	4B	0.62	11	N/A
E0	1.365	AC	1.105	72	0.815	4A	0.615	10	N/A
DF	1.36	AB	1.1	71	0.81	49	0.61	F	N/A
DE	1.355	AA	1.095	70	0.805	48	0.605	E	N/A
DD	1.35	A9	1.09	6F	0.8	47	0.6	D	N/A
DC	1.345	A8	1.085	6E	0.795	46	0.595	C	N/A
DB	1.34	A7	1.08	6D	0.79	45	0.59	B	N/A
DA	1.335	A6	1.075	6C	0.785	44	0.585	A	N/A
D9	1.33	A5	1.07	6B	0.78	43	0.58	9	N/A
D8	1.325	A4	1.065	6A	0.775	42	0.575	8	N/A
D7	1.32	A3	1.06	69	0.77	41	0.57	7	N/A
D6	1.315	A2	1.055	68	0.765	40	0.565	6	N/A
D5	1.31	A1	1.05	67	0.76	3F	0.56	5	N/A
D4	1.305	A0	1.045	66	0.755	3E	0.555	4	N/A
D3	1.3	9F	1.04	65	0.75	3D	0.55	3	N/A
D2	1.295	9E	1.035	64	0.745	3C	0.545	2	N/A
D1	1.29	9D	1.03	63	0.74	3B	0.54	1	N/A
D0	1.285	9C	1.025	62	0.735	3A	0.535	0	0
CF	1.28	9B	1.02	61	0.73	39	0.53		
CE	1.275	9A	1.015	60	0.725	38	0.525		
CD	1.27	99	1.01	5F	0.72	37	0.52		
CC	1.265	98	1.005	5E	0.715	36	0.515		
CB	1.26	97	1	5D	0.71	35	0.51		
CA	1.255	96	0.995	5C	0.705	34	0.505		
C9	1.25	95	0.99	5B	0.7	33	0.5		
C8	1.245	94	0.985	5A	0.695	32	0.495		
C7	1.24	93	0.98	59	0.69	31	0.49		
C6	1.235	92	0.975	58	0.685	30	0.485		

chanhvinh.com

Table 4: Intel 10mV VID table

VID (Hex)	Voltage (V)	VID (Hex)	Voltage (V)	VID (Hex)	Voltage (V)	VID (Hex)	Voltage (V)	VID (Hex)	Voltage (V)
FF	3.04	C5	2.46	8B	1.88	51	1.30	17	0.72
FE	3.03	C4	2.45	8A	1.87	50	1.29	16	0.71
FD	3.02	C3	2.44	89	1.86	4F	1.28	15	0.70
FC	3.01	C2	2.43	88	1.85	4E	1.27	14	0.69
FB	3.00	C1	2.42	87	1.84	4D	1.26	13	0.68
FA	2.99	C0	2.41	86	1.83	4C	1.25	12	0.67
F9	2.98	BF	2.40	85	1.82	4B	1.24	11	0.66
F8	2.97	BE	2.39	84	1.81	4A	1.23	10	0.65
F7	2.96	BD	2.38	83	1.80	49	1.22	F	0.64
F6	2.95	BC	2.37	82	1.79	48	1.21	E	0.63
F5	2.94	BB	2.36	81	1.78	47	1.20	D	0.62
F4	2.93	BA	2.35	80	1.77	46	1.19	C	0.61
F3	2.92	B9	2.34	7F	1.76	45	1.18	B	0.60
F2	2.91	B8	2.33	7E	1.75	44	1.17	A	0.59
F1	2.90	B7	2.32	7D	1.74	43	1.16	9	0.58
F0	2.89	B6	2.31	7C	1.73	42	1.15	8	0.57
EF	2.88	B5	2.30	7B	1.72	41	1.14	7	0.56
EE	2.87	B4	2.29	7A	1.71	40	1.13	6	0.55
ED	2.86	B3	2.28	79	1.70	3F	1.12	5	0.54
EC	2.85	B2	2.27	78	1.69	3E	1.11	4	0.53
EB	2.84	B1	2.26	77	1.68	3D	1.10	3	0.52
EA	2.83	B0	2.25	76	1.67	3C	1.09	2	0.51
E9	2.82	AF	2.24	75	1.66	3B	1.08	1	0.50
E8	2.81	AE	2.23	74	1.65	3A	1.07		
E7	2.80	AD	2.22	73	1.64	39	1.06		
E6	2.79	AC	2.21	72	1.63	38	1.05		
E5	2.78	AB	2.20	71	1.62	37	1.04		
E4	2.77	AA	2.19	70	1.61	36	1.03		
E3	2.76	A9	2.18	6F	1.60	35	1.02		
E2	2.75	A8	2.17	6E	1.59	34	1.01		
E1	2.74	A7	2.16	6D	1.58	33	1.00		
E0	2.73	A6	2.15	6C	1.57	32	0.99		
DF	2.72	A5	2.14	6B	1.56	31	0.98		
DE	2.71	A4	2.13	6A	1.55	30	0.97		
DD	2.70	A3	2.12	69	1.54	2F	0.96		
DC	2.69	A2	2.11	68	1.53	2E	0.95		
DB	2.68	A1	2.10	67	1.52	2D	0.94		
DA	2.67	A0	2.09	66	1.51	2C	0.93		
D9	2.66	9F	2.08	65	1.50	2B	0.92		
D8	2.65	9E	2.07	64	1.49	2A	0.91		
D7	2.64	9D	2.06	63	1.48	29	0.90		
D6	2.63	9C	2.05	62	1.47	28	0.89		
D5	2.62	9B	2.04	61	1.46	27	0.88		
D4	2.61	9A	2.03	60	1.45	26	0.87		
D3	2.60	99	2.02	5F	1.44	25	0.86		
D2	2.59	98	2.01	5E	1.43	24	0.85		
D1	2.58	97	2.00	5D	1.42	23	0.84		
D0	2.57	96	1.99	5C	1.41	22	0.83		
CF	2.56	95	1.98	5B	1.40	21	0.82		
CE	2.55	94	1.97	5A	1.39	20	0.81		
CD	2.54	93	1.96	59	1.38	1F	0.80		
CC	2.53	92	1.95	58	1.37	1E	0.79		
CB	2.52	91	1.94	57	1.36	1D	0.78		
CA	2.51	90	1.93	56	1.35	1C	0.77		
C9	2.50	8F	1.92	55	1.34	1B	0.76		
C8	2.49	8E	1.91	54	1.33	1A	0.75		
C7	2.48	8D	1.90	53	1.32	19	0.74		
C6	2.47	8C	1.89	52	1.31	18	0.73		

chanhvinh.com

BUS VOLTAGE UVLO

If the input to the Enable pin is derived from the bus voltage by a suitably programmed resistive divider, it can be ensured that the device does not turn on until the bus voltage reaches the desired level as shown in Figure 9. Only after the bus voltage reaches or exceeds this level and voltage at the Enable pin exceeds its threshold (typically 0.6V) will the device be enabled. Therefore, in addition to being logic input pin to enable the converter, the Enable feature, with its precise threshold, also allows the user to override the default 8 V Under-Voltage Lockout for the bus voltage (PVin). This is desirable particularly for high output voltage applications, where we might want the device to be disabled at least until PVin exceeds the desired output voltage level. Alternatively, the default 8 V PVin UVLO threshold may be reconfigured/overridden using the VIN_ON and VIN_OFF PMBus™ commands or the corresponding registers. It should be noted that the input voltage is also fed to an ADC through a 21:1 internal resistive divider. However, the digitized input voltage is used only for the purposes of reporting the input voltage through the READ_VIN PMBus™ command. It has no impact on the bus voltage UVLO, input overvoltage faults and input undervoltage warnings, all of which are implemented by using analog comparators to compare the input voltage to the corresponding thresholds programmed by the PMBus™ commands VIN_ON, VIN_OFF, VIN_OV_FAULT_LIMIT and VIN_UV_WARN_LIMIT respectively. The bus voltage reading as reported by READ_VIN has no effect on the input feedforward function either.

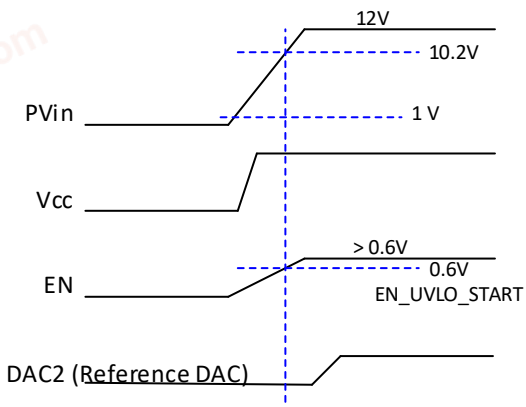

Figure 9: Normal Start up, device turns on when the bus voltage reaches 10.2A. A resistor divider is used at EN pin from PVin to turn on the device at 10.2V.

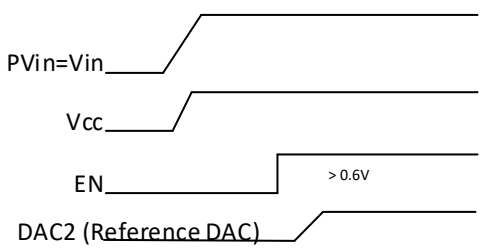

Figure 10: Recommended startup for Normal operation

Figure 10 shows the recommended startup sequence for the normal operation of the device, when Enable is used as logic input.

chanhvinh.com

PRE-BIAS STARTUP

These devices can start up into a pre-charged output, which prevents oscillation and disturbances of the output voltage.

The output starts in asynchronous fashion and keeps the synchronous MOSFET (Sync FET) off until the first gate signal for control MOSFET (Ctrl FET) is generated. Figure 11 shows a typical Pre-Bias condition at start up. The sync FET always starts with a narrow pulse width (12.5% of a switching period) and gradually increases its duty cycle with a step of 12.5%, with 16 cycles at each step, until it reaches the steady state value. Figure 12 shows the series of 16x8 startup pulses.

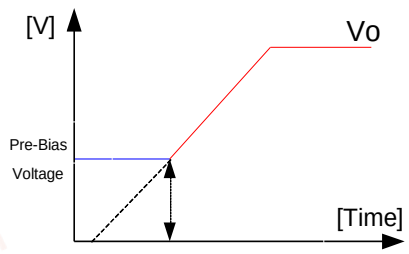

Figure 11: Pre-Bias startup

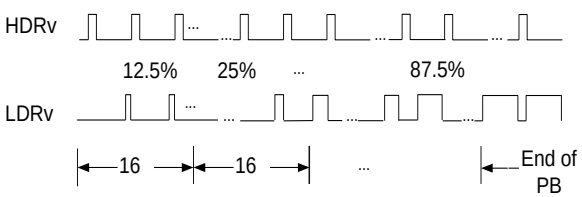

Figure 12: Pre-Bias startup pulses

SOFT-START (REFERENCE DAC RAMP)

These devices have an internal soft starting DAC to control the output voltage rise and to limit the current surge at the start-up. To ensure correct start-up, the DAC sequence initiates only after power conversion is enabled when the Enable pin voltage exceeds its undervoltage threshold, the PVin bus voltage exceeds its undervoltage threshold and the contents of the MTP have been fully loaded into the working registers. Figure 13 shows the waveforms during soft start. It should be noted that the part may also be configured to require software Enable (set through the PMBus™ or the corresponding MTP register) instead of or in addition to a “hardware” signal at the Enable pin. In PMBus™ mode, the reference DAC soft-start may be delayed from the time power conversion is enabled. The range for this programmable delay is 0ms to 127 ms, and the resolution is 1 ms. Further, in this mode, the soft start time may be configured from 1ms to 127 ms with 1 ms resolution.

In SVID mode, the rise time is determined by the slow slew rate specified by Intel, and may be programmed to one of four values: 0.625mV/us, 1.25 mV/us, 2.5 mV/us and 5 mV/us. In this mode, the device uses 2.5 mV/us by default. It should be noted, however, that if Vboot is 0, the output voltage does not ramp until the CPU issues a voltage setting command at either the fast slew rate or slow slew rate specified by the CPU.

chanhvinh.com

For more details on the PMBus™ commands TON_DELAY and TON_RISE used to program the startup sequence, please see the UN0075 IR3816x_IR3826x_IR3836x_PMBUS™ commandset user note.

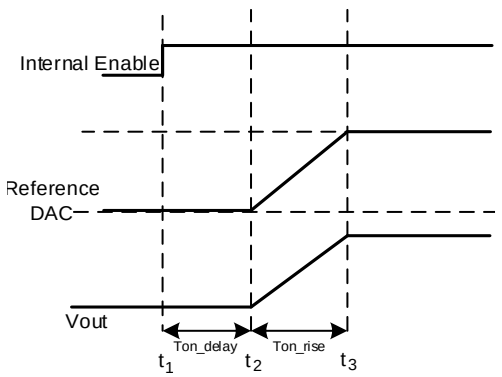

Figure 13: DAC2 (VREF) Soft start

During the startup sequence the over-current protection (OCP) and over-voltage protection (OVP) are active to protect the device against any short circuit or over voltage condition.

OPERATING FREQUENCY

Using the FREQUENCY_SWITCH PMBus™ command, or the corresponding registers, the switching frequency may be programmed between 150 kHz and 1.5 MHz. For best telemetry accuracy, it is recommended that the following switching frequencies be avoided: 250 kHz, 300 kHz, 400 kHz, 500 kHz, 600 kHz, 750 kHz, 800 kHz, 1 MHz, 1.2 MHz and 1.5 MHz. Instead, it is recommended to use the following values 251 kHz, 302 kHz, 403 kHz, 505 kHz, 607 kHz, 762 kHz, 813 kHz, 978 kHz, 1171 kHz and 1454 kHz respectively.

SHUTDOWN

In the default configuration, the device can be shutdown by pulling the Enable pin below its 0.4V threshold. During shutdown the high side and the low side drivers are turned off. By default, the device exhibits an immediate shutdown with no delay and no soft stop.

Alternatively, the part may be configured to allow shutdown using the OPERATION PMBus™ command or the corresponding register. It may also be configured to allow a soft or controlled turned off. In PMBus™ mode, if the soft-off option is used, the turn off may be delayed from the time the power conversion is disabled. The range for this programmable delay is 0ms to 127 ms, and the resolution is 1 ms. Further, in this mode, the soft stop time may be configured from 1ms to 127 ms with 1 ms resolution. The programmable turn off delay only applies in PMBus™ mode. In PVID mode, if the soft-stop option is used, the output voltage slews down at 0.625 mV/us.

chanhvinh.com

CURRENT SENSING, TELEMETRY AND OVER CURRENT PROTECTION

Current sensing for both, telemetry as well as overcurrent protection is done by sensing the voltage across the sync FET Rdson. This method enhances the converter's efficiency, reduces cost by eliminating a current sense resistor and any minimizes sensitivity to layout related noise issues. A novel, patented scheme allows reconstruction of the average inductor current from the voltage sensed across the Sync FET Rdson. It should be noted here that it is this reconstructed average inductor current that is digitized by the ADC and used for output current reporting as well as for overcurrent warning, the threshold for which may be set using the IOUT_OC_WARN_LIMIT command. The current is reported in 1/16A resolution using the READ_IOUT PMBus™ command. For the IR38165 and IR38365, which support I2C communication, but not PMBus™, the current information may be read back through the 8-bit register *output_current_byte,* which reports the current in 1/4 A resolution.

The Over current (OC) fault protection circuit also uses the voltage sensed across the $R_{DS(on)}$ of the Synchronous MOSFET; however, the protection mechanism relies on a fast comparator to compare the sensed signal to the overcurrent threshold and does not depend on the ADC or reported current. The current limit scheme uses an internal temperature compensated current source that has the same temperature coefficient as the $R_{DS(on)}$ of the Synchronous MOSFET. As a result, the over-current trip threshold remains almost constant over temperature.

Over Current Protection circuitry senses the inductor current flowing through the Synchronous FET closer to the valley point. The OCP circuit samples this current for 75 ns typically after the rising edge of the PWM set pulse which is an internal signal that has a width of 12.5% of the switching period. The PWM pulse that turns on the high side FET starts at the falling edge of the PWM set pulse. This makes valley current sense more robust as current is sensed close to the bottom of the inductor downward slope where transient and switching noise is low. This helps to prevent false tripping due to noise and transients.

The actual DC output current limit point will be greater than the valley point by an amount equal to approximately half of the peak to peak inductor ripple current. The current limit point will be a function of the inductor value, input voltage, output voltage and the frequency of operation. On equation 1, I_{Limit} is the value set when configuring the OCP value. The user should account for the inductor ripple to obtain the actual DC output current limit.

$$I_{OCP} = I_{LIMIT} + \frac{\Delta i}{2} \qquad (1)$$

I_{OCP} = DC current limit hiccup point
I_{LIMIT} = Current Limit Valley Point
Δi = Inductor ripple current

chanhvinh.com

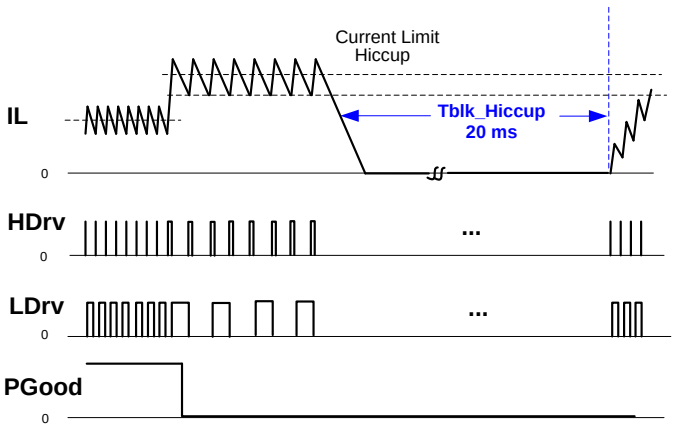

Figure 14: Timing Diagram for Current Limit Hiccup

In the default configuration, if the overcurrent detection trips the OCP comparator for a total of 8 cycles, the device goes into a hiccup mode. The hiccup is performed by de-asserting the internal Enable signal to the analog and power conversion circuitry and holding it low for 20 ms.

Following this, the OCP signal resets and the converter recovers. After every hiccup cycle, the converter stays in this mode until the overload or short circuit is removed. This behavior is shown in Figure 14.

It should be noted that on some units, a false OCP maybe experienced during device start-up due to noise. The part will ride through this false OCP due to the pulse by pulse current limiting feature and successfully ramp to the correct output voltage. However, it is recommended to send a PMBUS™ Clear_Faults command after start-up to reset the PMBUS™ SAlert# to a high and to clear the PMBUS™ status register for faults.

Note that the user can override the default overcurrent threshold using the PMBus™ command IOUT_OC_FAULT_LIMIT. For the IR38163/IR38165 it is recommended that the overcurrent threshold be programmed to at least 16A for good accuracy. For the IR38363/IR38365 a minimum threshold of 12A is recommended. While these devices will still offer overcurrent protection for thresholds programmed lower than these recommended values, the thresholds will not be as accurate.

Also, using the PMBus™ command IOUT_OC_FAULT_RESPONSE or the corresponding registers, the part may be configured to respond to an overcurrent fault in one of two ways

1) Pulse by pulse current limiting for a programmed number of 8 switching cycles followed by a latched shutdown.
2) Pulse by pulse current limiting for a programmed number of 8 switching cycles followed by hiccup. This is the default explained above.

The pulse-by-pulse or constant current limiting mechanism is briefly explained below.

chanhvinh.com

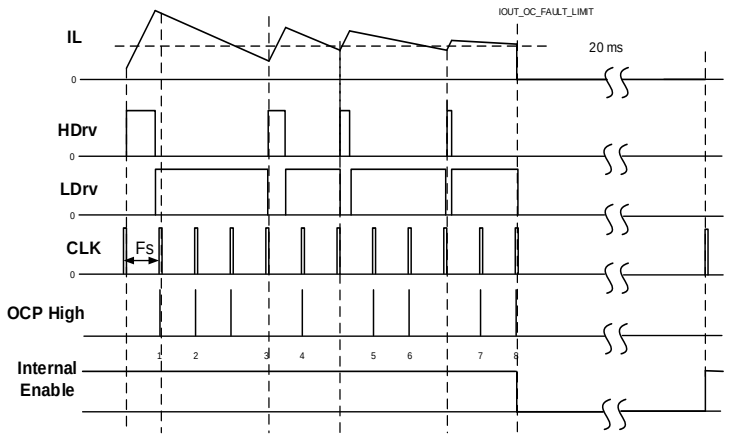

Figure 15: Pulse by pulse current limiting for 8 cycles, followed by hiccup.

In Figure 15, overcurrent response is set to pulse-by-pulse current limiting for 8 cycles followed by hiccup, the converter is operating at D<0.125 when the overcurrent condition occurs. In such a case, no duty cycle limiting is applied.

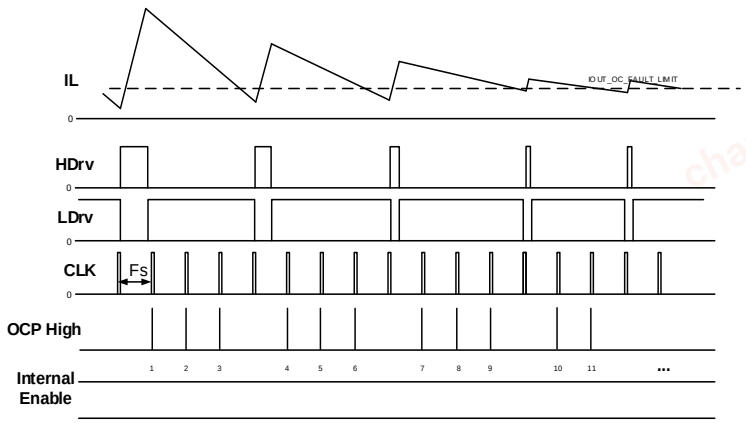

Figure 16: Constant current limiting.

Figure 16 depicts a case where the overcurrent condition happens when the converter is operating at D>0.5 and the overcurrent response has been set to Constant current operation through pulse by pulse current limiting. In such a case, after 3 consecutive overcurrent cycles are recognized, the pulse width is dropped such that D=0.5 and then after 3 more consecutive OCP cycles, to 0.25 and then finally to 0.125 at which it keeps running until the total OCP count reaches the programmed maximum following which the part enters hiccup mode. Conversely, when the overcurrent condition disappears, the pulse width is restored to its nominal value gradually, by a similar mechanism in reverse; every sequence of 4 consecutive cycles in which the current is below the overcurrent threshold doubles the duty cycle, so that D goes from 0.125 to 0.25, then to 0.5 and finally to its nominal value.

chanhvinh.com

DIE TEMPERATURE SENSING, TELEMETRY AND THERMAL SHUTDOWN

On die temperature sensing is used for accurate temperature reporting and over temperature detection. The READ_TEMEPRATURE PMBus™ command reports this temperature in 1^0C resolution. For the IR38165 and IR38365, which do not support PMBus™ communication, the temperature may be read back through the 8-bit register *temp_byte,* which reports the die temperature in 1^0C resolution, offset by 40^0C. Thus, the temperature is given by temp_*byte* $+40^0$C.

The trip threshold is set by default to 125°C. The default over temperature response of the device is to inhibit power conversion while the fault is present, followed by automatic restart after the fault condition is cleared. Hence, in the default configuration, when trip threshold is exceeded, the internal Enable signal to the power conversion circuitry is de-asserted, turning off both MOSFETs.

Automatic restart is initiated when the sensed temperature drops within the operating range. There is a 25°C hysteresis in the thermal shutdown threshold.

The default overtemperature threshold as well as overtemperature response may be re-configured or overridden using the OT_FAULT_LIMIT and OT_FAULT_RESPONSE PMBus™ commands respectively. For the IR38165 and IR38365, which do not support PMBus™, the corresponding registers may be used. The devices support three types of responses to an over-temperature fault:

1) Ignore
2) Inhibit when over temperature condition exists and auto-restart when over temperature condition disappears
3) Latched shutdown.

REMOTE VOLTAGE SENSING

True differential remote sensing in the feedback loop is critical to high current applications where the output voltage across the load may differ from the output voltage measured locally across an output capacitor at the output inductor, and to applications that require die voltage sensing.

The RS+ and RS- pins form the inputs to a remote sense differential amplifier with high speed, low input offset and low input bias current, which ensure accurate voltage sensing and fast transient response in such applications.

The input range for the differential amplifier is limited to 1.5V below the VCC rail. Therefore, for applications in which the output voltage is more than 3V, it is recommended to use local sensing, or if remote sensing is a must, then the voltage between the RS+ and RS-pins must be divided down to less than 3V using a resistive voltage divider. It's recommended that the divider be placed at the input of the remote sense amplifier and that a low impedance such as 499 Ω be used between the RS+ and RS- nodes. A typical schematic for this setup is shown on Figure 5. Please note, however, that this modifies the open loop transfer function and requires a change in the compensation network to optimally stabilize the loop.

chanhvinh.com

FEED-FORWARD

Feed-Forward (F.F.) is an important feature, because it can keep the converter stable and preserve its load transient performance when PVin varies over a wide range. The PWM ramp amplitude (Vramp) is proportionally changed with PVin to maintain PVin/Vramp almost constant throughout PVin variation range (as shown in Figure 17). Thus, the control loop bandwidth and phase margin can be maintained constant. The feed-forward function can also minimize impact on output voltage from fast PVin change. The feed-forward is disabled for PVin<4.7V. Hence, for PVin<4.7V, a re-calculation of control loop parameters is needed for re-compensation.

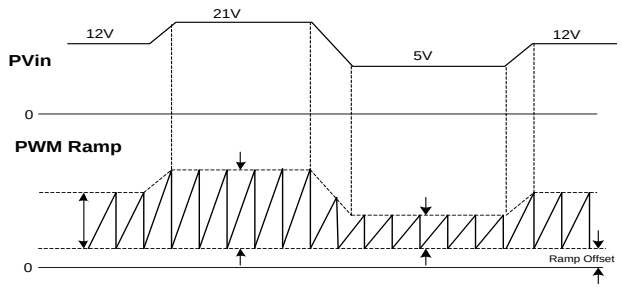

Figure 17: Timing Diagram for Feed-Forward (F.F.) Function

LIGHT LOAD EFFICIENCY ENHANCEMENT (AOT)

These devices implement a diode emulation scheme with Adaptive On Time control or AOT to improve light load efficiency. It is based on a COT (Constant On Time) control scheme with some novel advancements that make the on-time during diode emulation adaptive and dependent upon the pulse width in constant frequency operation. This allows the scheme to be combined with a PWM scheme, while providing relatively smooth transition between the two modes of operation. In other words, the switching regulator can operate in AOT mode at light loads and automatically switch to PWM at medium and heavy loads and vice versa. Therefore, the regulator will benefit from the high efficiency of the AOT mode at light loads, and from the constant frequency and fast transient response of the PWM at medium to heavy loads.

In PMBus™ mode, a MFR_SPECIFIC PMBus™ command (MFR_FCCM) can be used to enable AOT operation at light load for the IR38163 and IR38363. For the IR38165 and IR38365, the corresponding mtp register bit *mfr_fccm* must be set to 0 to allow AOT operation. In SVID mode, there are two ways in which AOT operation may be enabled:

a) Auto-PS: Set the *mfr_fccm* bit to 0.

b) PS commands issued by the CPU: Set the *mfr_fccm* bit to 1. The device will then allow AOT operation only if commanded to power states PS2, PS3 or PS4 by the CPU. Conversely, a command to power states PS0 or PS1 or a VID command to a higher voltage will disable AOT operation.

If it is desired that AOT operation be disabled altogether (recommended), allowing neither Auto-PS nor PS commands issued by the CPU to enable AOT operation, it is essential to

a) The *svid_ps_override* bit must be set to 1.

chanhvinh.com

b) Set *svid_ps_override_val[2:0]* to 0.

c) Set the *mfr_fccm* bit to 1.

Shortly after the reference voltage has finished ramping up, an internal circuit which is called the “calibration circuit” starts operation. It samples the Comp voltage (output of the error amplifier), digitizes it and stores it in a register. There is a DAC which converts the value of this register to an analog voltage which is equal to the sampled Comp voltage. At this time, the regulator is ready to enter AOT mode if the load condition is appropriate. If the load is so low that the inductor current becomes negative before the next SW pulse, the operation can be switched to AOT mode. The condition to enter AOT is the occurrence of 8 consecutive inductor current zero crossings in eight consecutive switching cycles. If this happens, operation is switched to AOT mode as shown in Figure 18. The inductor current is sensed using the RDS_ON of the Sync-FET and no direct inductor current measuring is required. In AOT mode, just like COT operation, pulses with constant width are generated and diode emulation is utilized. This means that a pulse is generated and LDrv is held on until the inductor current becomes zero. Then both HDrv and LDrv remain off until the voltage of the sense pin comes down and reaches the reference voltage. At this moment the next pulse is generated. The sense pin is connected to the output voltage by a resistor divider which has the same ratio as the voltage divider which is connected to the feedback pin (Fb).

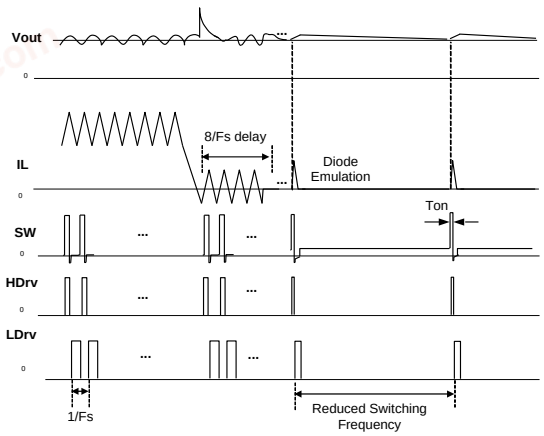

Figure 18: Timing Diagram for Reduced Switching Frequency and Diode Emulation in Light Load Condition (AOT mode)

When the load increases beyond a certain value, the control is switched back to PWM through either of the following two mechanisms:

1) If due to the increase in load, the output voltage drops to 95% of the reference voltage.
2) If Vsense remains below the reference voltage for 3 consecutive inductor current zero-cross events

It is worth mentioning that in AOT mode, when Vsense comes down to reference voltage level, a new pulse in generated only if the inductor current is already zero. If at this time the inductor current (sensed on the Sync-FET) is still positive, the new pulse generation is postponed till the current decays to zero. The second condition mentioned above usually happens when the load is gradually increased.

chanhvinh.com

AOT is disabled during output voltage transitions. It is enabled only after reference voltage finishes its ramp (up or down) and the calibration circuit has sampled and held the new Comp voltage.

In general, AOT operation is more jittery and noisier than FCCM operation, where the switching frequency may vary from cycle to cycle, giving increased Vout ripple and noisier, inconsistent telemetry. Therefore, it is recommended to use FCCM mode of operation as far as possible.

OUTPUT VOLTAGE SENSING, TELEMETRY AND FAULTS

For this family of devices, the voltage sense and regulation circuits are decoupled, enabling ease of testing as well as redundancy. In order to do this, the device uses the sense voltage at the dedicated Vsns pin for output voltage reporting (in 1/256 V resolution, using the READ_VOUT PMBus™ command) as well as for power good detection and output overvoltage protection.

Power good detection and output overvoltage detection rely on fast analog comparator circuits, whereas overvoltage warnings as well as undervoltage faults and warnings rely on comparing the digitized Vsns to the corresponding thresholds programmed using PMBus™ commands VOUT_OV_WARN_LIMIT, VOUT_UV_FAULT_LIMIT and VOUT_UV_WARN_LIMIT respectively (or the corresponding registers in the case of IR38165 and IR38365).

Power Good Output

The Vsns voltage is an input to the window comparator with programmable thresholds. The PGood signal is high whenever Vsns voltage is within the PGood comparator window thresholds. The PGood pin is open drain and it needs to be externally pulled high. High state indicates that output is in regulation. For the IR38163 and IR38363, the Power Good thresholds may be changed through the POWER_GOOD_ON and POWER_GOOD_OFF commands, which set the rising and falling PGood thresholds respectively. For the IR38165 and IR38365, which lack PMBus™, the thresholds may be programmed using the corresponding mtp registers. However, when no resistive divider is used, such as for output voltages lower than 2.555V, the Power Good thresholds must be programmed to within 630 mV of the output voltage, otherwise, the effective power good threshold changes from an absolute threshold to one that tracks the output voltage with a 630 mV offset. By default, the PGood signal will assert as soon as the Vsns signal enters the regulation window. In digital mode, this delay is programmable from 0 to 10ms with a 1 ms resolution, using the MFR_TPGDLY command.

The threshold is set differently in SVID mode. In this mode, the thresholds set by the POWER_GOOD_ON and POWER_GOOD_OFF commands (or the corresponding registers) are ignored. Power Good is asserted when the output voltage is within the tolerance band of the boot voltage. Following this, the Power Good signal remains asserted irrespective of any output voltage transitions and is de-asserted only in the event of a fault that shuts down power conversion, or, if so programmed, in the event of a command by the CPU to change the output voltage to 0 V.

chanhvinh.com

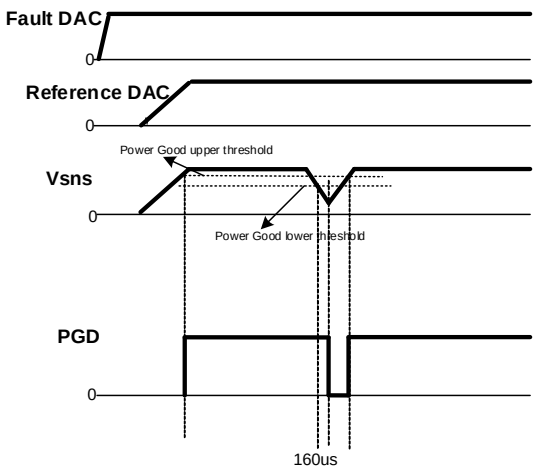

Figure 19: Power Good in PMBus™ mode

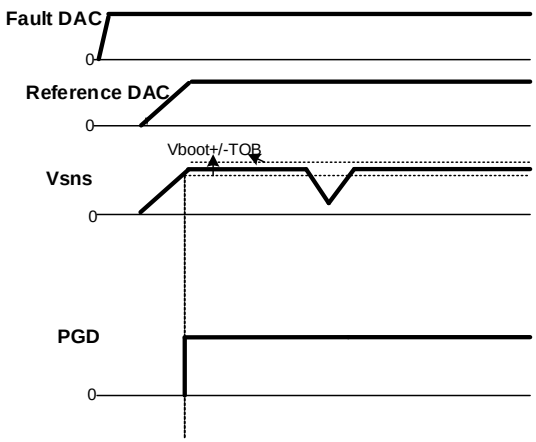

Figure 20: Power Good in SVID mode, Vboot >0 V

chanhvinh.com

Over-Voltage Protection (OVP)

Over-voltage protection is achieved by comparing sense pin voltage Vsns to a configurable overvoltage threshold.

The OVP threshold may be reprogrammed to within 655 mV of the output voltage (for output voltages lower than 2.555V, without any resistive divider on the Fb pin), using the VOUT_OV_FAULT_LIMIT PMBus™ command or the corresponding registers (for IR38363 and IR38365). For an OVP threshold programmed to be more than 655 mV greater than the output voltage, the effective OV threshold ceases to be an absolute value and instead tracks the output voltage with a 655 mV offset.

When Vsns exceeds the over voltage threshold, an over voltage trip signal asserts after 200ns (typ.) delay. The default response is that the high side drive signal HDrv is latched off immediately and PGood flags are set low. The low side drive signal is kept on until the Vsns voltage drops below the threshold. HDrv remains latched off until a reset is performed by cycling either Vcc or Enable or the OPERATION command. The device allows the user to reconfigure this response by the use of the VOUT_OV_FAULT_RESPONSE PMBus™ command. In addition to the default response described above, this command can be used to configure the device such that Vout overvoltage faults are ignored and the converter remains enabled. (However, they will still be flagged in the STATUS_REGISTERS and by $\overline{\text{SALert}}$). For further details on the corresponding PMBus™ commands related to OVP, please refer to the UN0075 IR3816x_IR3826x_IR3836x_PMBUS™ commandset user note.

Vsns voltage is set by an external resistive voltage divider connected to the output. This divider ratio must match the divider used on the feedback pin or on the RS+ pin.

It should be noted that the overvoltage threshold applies in PMBus™ mode as well as SVID mode.

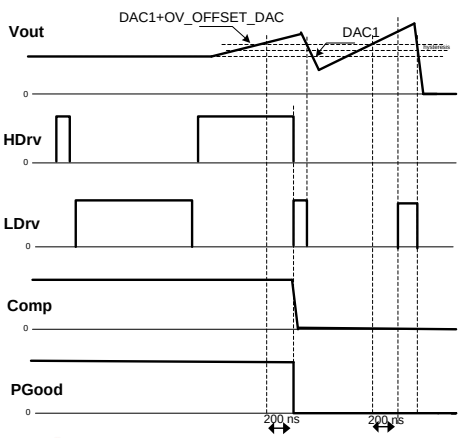

Figure 21: Timing Diagram for OVP in non-tracking mode

chanhvinh.com

MINIMUM ON TIME CONSIDERATIONS

The minimum ON time is the shortest amount of time for Ctrl FET to be reliably turned on. This is a very critical parameter for low duty cycle, high frequency applications. In the conventional approach, when the error amplifier output is near the bottom of the ramp waveform with which it is compared to generate the PWM output, propagation delays can be high enough to cause pulse skipping, and hence limit the minimum pulse width that can be realized. Moreover, in the conventional approach, the bottom of the ramp often presents a high gain region to the error amplifier output, making the modulator more susceptible to noise and requiring the use of lower control loop bandwidth to prevent noise, jitter and pulse skipping.

Infineon has developed a proprietary scheme to improve and enhance the minimum pulse width which minimizes these delays and hence, allows stable operation with pulse-widths as small as 35ns. At the same time, this scheme also has greater noise immunity, thus allowing stable, jitter free operation down to very low pulse widths even with a high control loop bandwidth, thus reducing the required output capacitance.

Any design or application using these devices must ensure operation with a pulse width that is higher than the minimum on-time and at least 50 ns of on-time is recommended in the application. This is necessary for the circuit to operate without jitter and pulse-skipping, which can cause high inductor current ripple and high output voltage ripple.

$$t_{on} = \frac{D}{F_s} = \frac{V_{out}}{PV_{in} \times F_s} \quad (2)$$

In any application that uses these devices, the following condition must be satisfied:

$$t_{on(\min)} \le t_{on} \quad (3)$$

$$t_{on(\min)} \le \frac{V_{out}}{PV_{in} \times F_s} \quad (4)$$

$$\therefore PV_{in} \times F_s \le \frac{V_{out}}{t_{on(\min)}} \quad (5)$$

The minimum output voltage is limited by the reference voltage and hence $V_{out(min)}$ = 0.5V. Therefore, for $V_{out(min)}$ = 0.5V,

$$\therefore PV_{in} \times F_s \le \frac{V_{out}}{t_{on(\min)}} \quad (6)$$

$$\therefore PV_{in} \times F_s \le \frac{0.5V}{50ns} \le 10\ \mathrm{V/\mu s}$$

chanhvinh.com

Therefore, at the maximum recommended input voltage 16V and minimum output voltage, the converter should be designed at a switching frequency that does not exceed 625 kHz. Conversely, for operation at the maximum recommended operating frequency (1.5 MHz) and minimum output voltage (0.5V), the input voltage (PVin) should not exceed 6.7 V, otherwise pulse skipping may happen.

MAXIMUM DUTY RATIO

An upper limit on the operating duty ratio is imposed by the larger of a) A fixed off time (dominant at high switching frequencies) b) blanking provided by the PWMSet or clock pulse, which has a pulse width that is 1/8 of the switching period. The latter mechanism is dominant at lower switching frequencies (typically below 1.25 MHz). This upper limit ensures that the Sync FET turns on for a long enough duration to allow recharging the bootstrap capacitor and also allows current sensing. Figure 22 shows a plot of the maximum duty ratio vs. the switching frequency with built in input voltage feed forward mechanism.

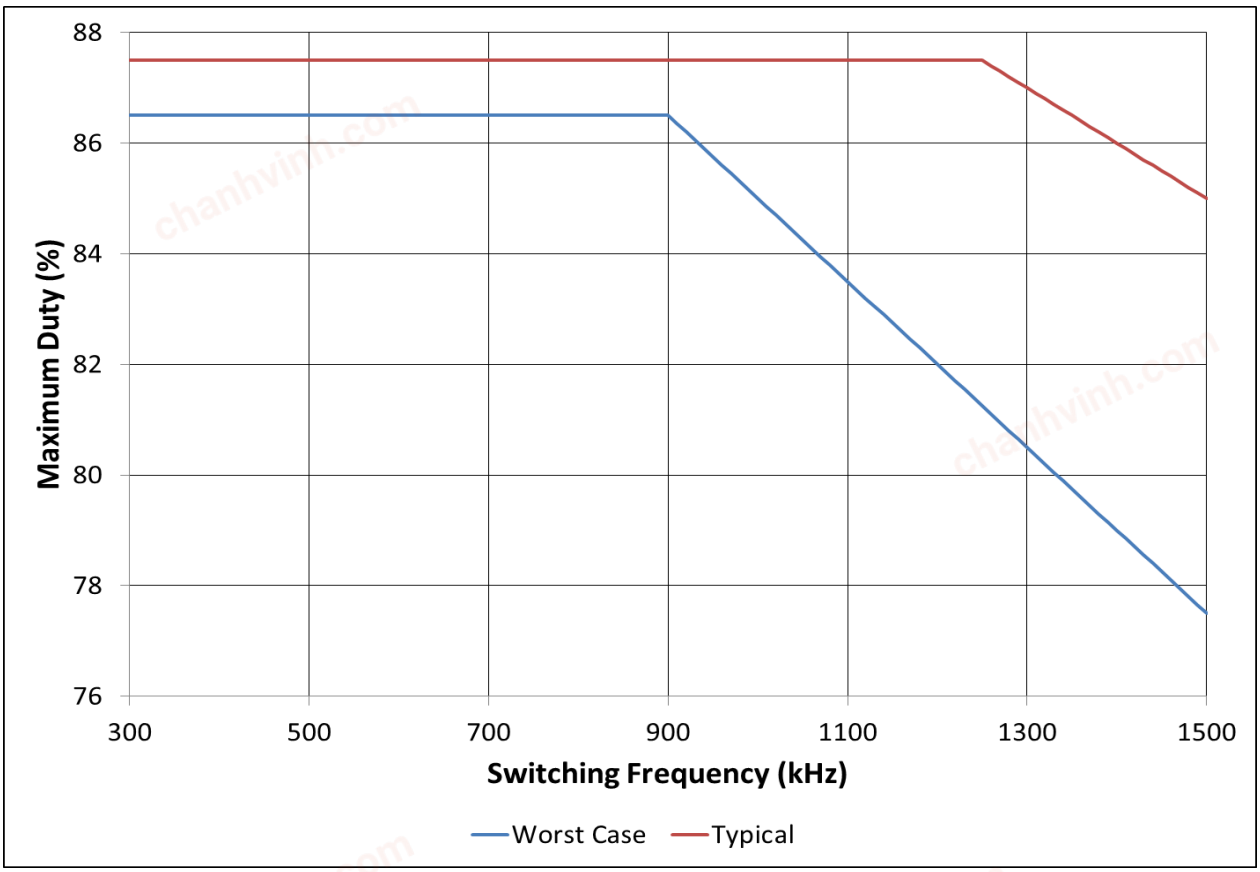

Figure 22: Maximum duty cycle vs. switching frequency

chanhvinh.com

BOOTSTRAP CAPACITOR

To drive the Control FET, it is necessary to supply a gate voltage at least 4V greater than the voltage at the SW pin, which is connected to the source of the Control FET. This is achieved by using a bootstrap configuration, which comprises the internal bootstrap diode and an external bootstrap capacitor (C1). Typically a 0.1uF capacitor is used. A layout placement for a 0 ohm resistor in series with the capacitor is also recommended. For applications where PVin>14V, a 1 ohm resistor is required. The operation of the circuit is as follows: When the sync FET is turned on, the capacitor node connected to SW is pulled down to ground. The capacitor charges towards V_{cc} through the internal bootstrap diode (Figure 23), which has a forward voltage drop V_D. The voltage V_c across the bootstrap capacitor C1 is approximately given as:

$$V_c \cong V_{cc} - V_D \qquad (7)$$

When the control FET turns on in the next cycle, the capacitor node connected to SW rises to the bus voltage PVin. However, if the value of C1 is appropriately chosen, the voltage Vc across C1 remains approximately unchanged and the voltage at the Boot pin becomes:

$$V_{Boot} \cong PV_{in} + V_{cc} - V_D \qquad (8)$$

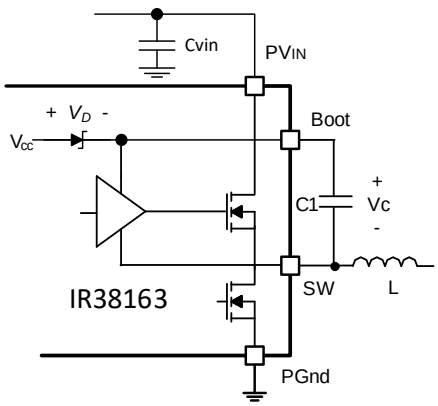

Figure 23: Bootstrap circuit to generate high side drive voltage

INTEL SVID INTERFACE

These devices implement a fully compliant Intel® VR 13, and VR 12.5 Serial VID (SVID) interface. This is a three-wire interface between an Intel processor and a VR that consists of clock, data and alert# signals.

This family of devices implements all the required SVID registers and commands per Intel specifications. For the selected Intel mode, these devices also implement most of the optional commands and registers with very few exceptions.

chanhvinh.com

The default SVID addresses of these devices are as below. This address can be re-programmed in MTP.

Device	Default SVID address
IR38163, IR38165	02
IR38363, IR38365	03

ALL CALL SUPPORT

All Call for these devices can be configured in following ways:

- 0E and 0F.
- 0E only.
- 0F only.
- No All Call

The devices can be configured to be used as VR for CPU which is All Call 0F or Memory which is All Call 0E.

VR 12.5 OPERATION

VR 12.5 mode is selectable via MTP bit. The boot voltage in VR 12.5 is also selectable and can be taken from the boot registers. The resolution is programmable via MTP bit to 10 mV to be compatible to VR12.5 mode.

VR 13 OPERATION

VR 13 mode is selectable via MTP bit. The boot voltage in VR 13 mode is configured in the boot register. The resolution is programmable via MTP bit to 5 mV to be compatible to VR13 mode.

SET WORK POINT

This family of devices supports SVID Set WP command to Set VID voltage for all rails through all call address. When processor asserts a Set WP command, all the rails of the VR settle to the corresponding new set voltage encoded in WP registers. Slew rate and power state of all the rails are identical during a set work point operation.

DYNAMIC VID SLEW RATE

The device provides the VR designer 16 fast slew rates that govern the rate of VID transitions. The slow slew rate is also programmable as a function of the fast slew rate, and 4 different options are available for each setting of the fast slew rate as shown below in Table 5.

chanhvinh.com

TABLE 5: SLEW RATES

	Fast Rate	x 1/2 Factor	x 1/4 Factor	x 1/8 Factor	x 1/16 Factor
mV/µs	10	5.0	2.50	1.25	0.0625
	15	7.5	3.75	1.875	0.94
	20	10	5.00	2.50	1.25
	25	12.5	6.25	3.125	1.56
	30	15	7.5	3.75	1.88
	35	17.5	8.75	4.375	2.19
	40	20	10	5.0	2.5
	45	22.5	11.25	5.625	2.81
	50	25	12.5	6.25	3.125
	55	27.5	13.75	6.875	3.4375
	60	30	15	7.5	3.75
	65	32.5	16.25	8.125	4.0625
	70	35	17.5	8.75	4.375
	80	40	20	10	5

LOOP COMPENSATION

Feedback loop compensation is achieved using standard Type III techniques and the compensation values can be easily calculated using Infineon's design tool. The design tool can also be used to predict the control bandwidth and phase margin for the loop for any set of user defined compensation component values. For a theoretical understanding of the calculations used, please refer to Infineon's Application Note AN-1162 "Compensator Design Procedure for Buck Converter with Voltage-Mode Error-Amplifier".

DYNAMIC VID COMPENSATION

This family of devices uses an analog control scheme with voltage mode control. In this scheme, the compensator acts on the Vout signal and not just on the error signal. For load and line transients, with a steady and unchanging reference voltage, this has the same dynamic characteristics as for a compensator that acts on only the error signal. However, for reference voltage changes, as in the case of Dynamic VID, the dynamics are altered. A proprietary and patented dynamic VID compensation scheme allows the dynamic VID response to be tuned optimally to the feedback compensator values. Once properly optimized, the output voltage will follow the DAC more closely during a positive dynamic VID, and provide better dynamic VID alert timing, as required by Intel® processors. Infineon's design tool will allow the user to quickly and conveniently calculate the dynamic VID compensation parameters for optimal dynamic VID response.

chanhvinh.com

LAYOUT RECOMMENDATIONS

The layout is very important when designing high frequency switching converters. Layout will affect noise pickup and can cause a good design to perform with less than expected results.

Make the connections for the power components in the top layer with wide, copper filled areas or polygons. In general, it is desirable to make proper use of power planes and polygons for power distribution and heat dissipation.

The input capacitors, inductor, output capacitors and the device should be as close to each other as possible. This helps to reduce the EMI radiated by the power traces due to the high switching currents through them. Place the input capacitor directly at the PVin pin of IR38x6x.

Power vias should be at least 20/10 mil and a good rule of thumb is to design at 2A/via.

The feedback part of the system should be kept away from the inductor and other noise sources.

The critical bypass components such as capacitors for Vin, VCC and 1.8V should be close to their respective pins. It is important to place the feedback components including feedback resistors and compensation components close to Fb and Comp pins.

In a multilayer PCB use one layer as a power ground plane and have a control circuit ground (analog ground), to which all signals are referenced. The goal is to localize the high current path to a separate loop that does not interfere with the more sensitive analog control functions. These two grounds must be connected together on the PC board layout at a single point. It is recommended to place all the compensation parts over the analog ground plane in top layer.

The Power QFN is a thermally enhanced package. Based on thermal performance it is recommended to use at least a 6-layer PCB. To effectively remove heat from the device the exposed pad should be connected to the ground plane using vias.

IR38163/165/363/365 devices have 3 pins, SCL, SDA and SALERT# that are used for I2C/PMBus™ communication. It is recommended that the traces used for these communication lines be at least 10 mils wide with spacing between the SCL and SDA traces that is at least 2-3 times the trace width.

chanhvinh.com

I2C PROTOCOLS

All registers may be accessed using either I2C or PMBus™ protocols. I2C allows the use of a simple format whereas PMBus™ provides error checking capability. Figure 24 shows the I2C format employed by the IC.

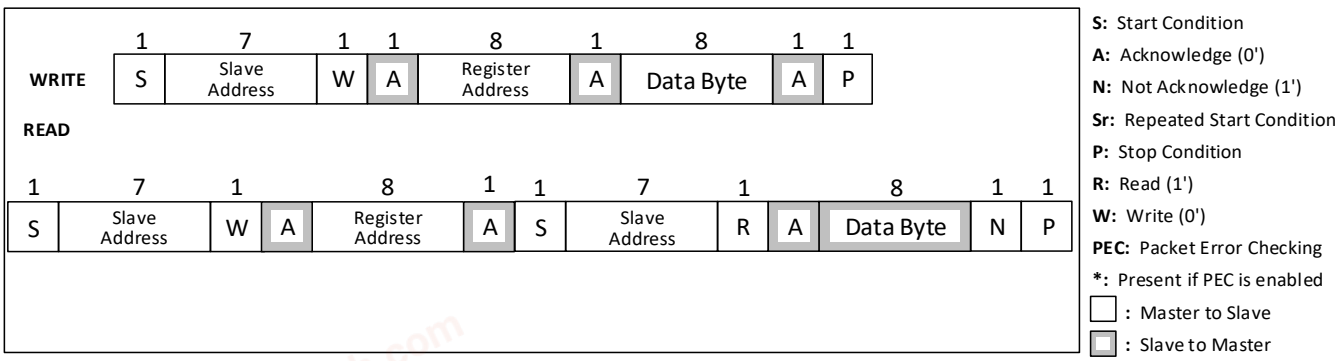

Figure 24: I2C Format

SMBUS/PMBUS™ PROTOCOLS

To access IR's configuration and monitoring registers, 4 different protocols are required:

- the SMBus Read/Write Byte/Word protocol with/without PEC (for status and monitoring)
- the SMBus Send Byte protocol with/without PEC (for CLEAR_FAULTS only)
- the SMBus Block Read protocol for accessing Model and Revision information
- the SMBus Process call (for accessing Configuration Registers)

In addition, the IC supports:

- Alert Response Address (ARA)
- Bus timeout
- Group Command for writing to many VRs within one command

chanhvinh.com

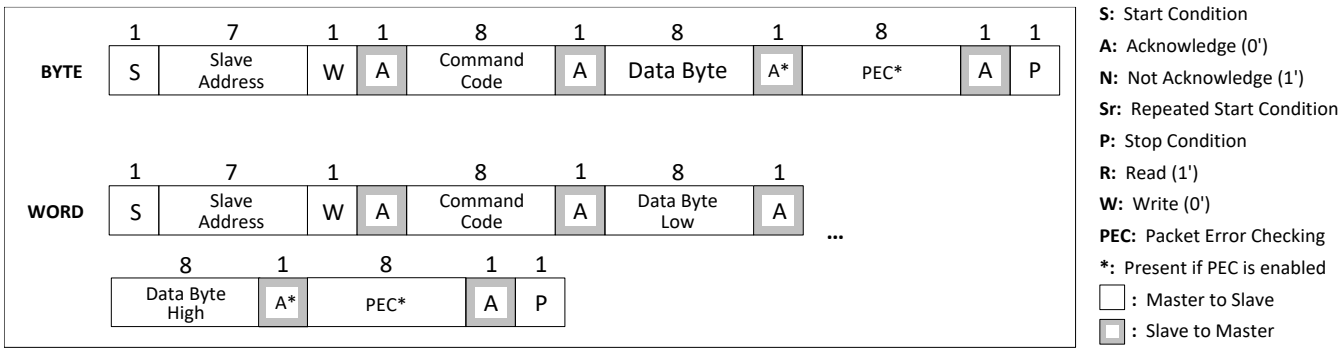

Figure 25: SMBus Write Byte/Word

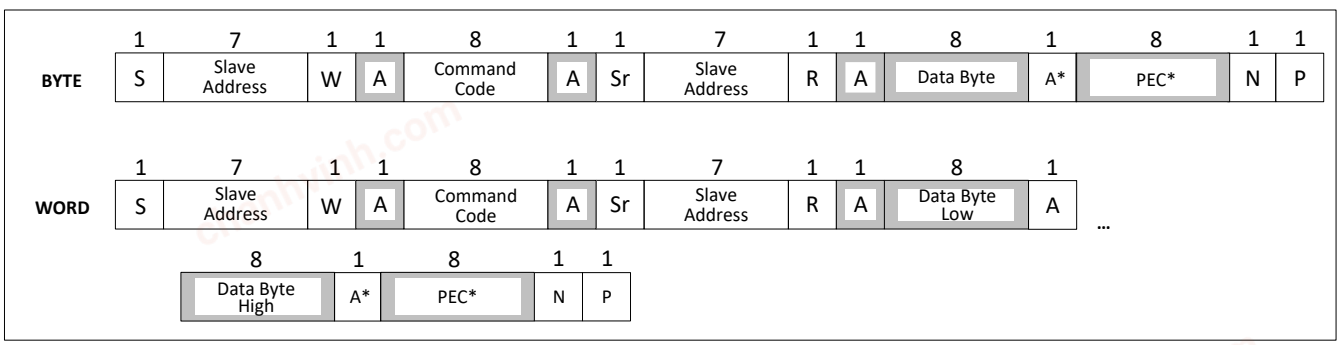

Figure 26: SMBus Read Byte/Word

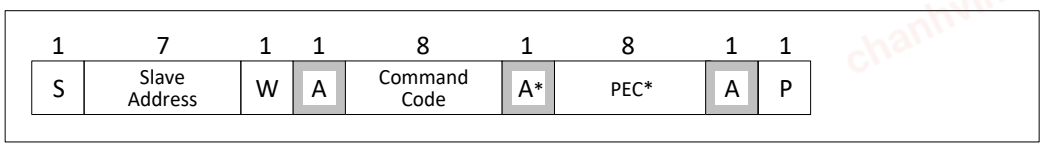

Figure 27: SMBus Send Byte

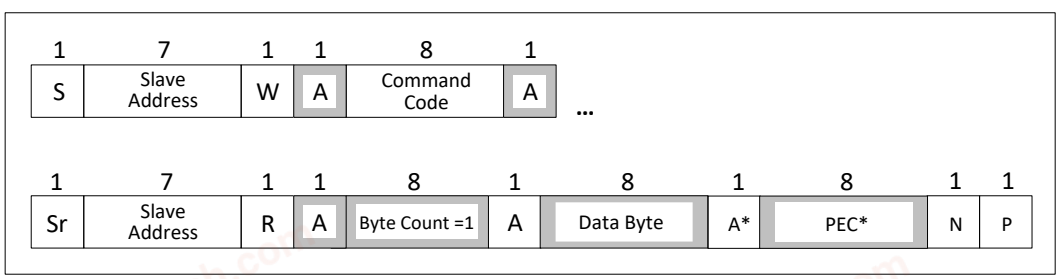

Figure 28: SMBus Block Read with Byte Count=1

chanhvinh.com



Figure 29: MFR specific command to Write an internal register

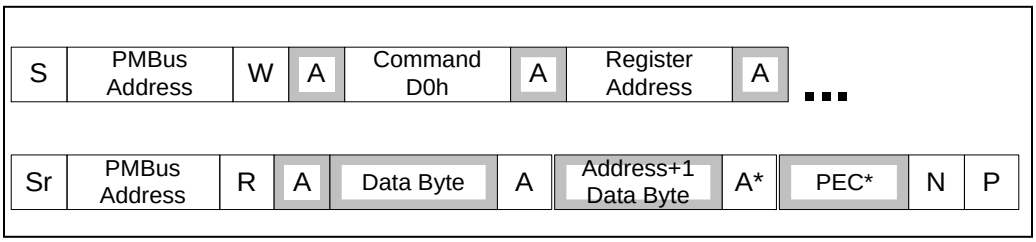

Figure 30: SMBus Custom Process Call to Read an internal register

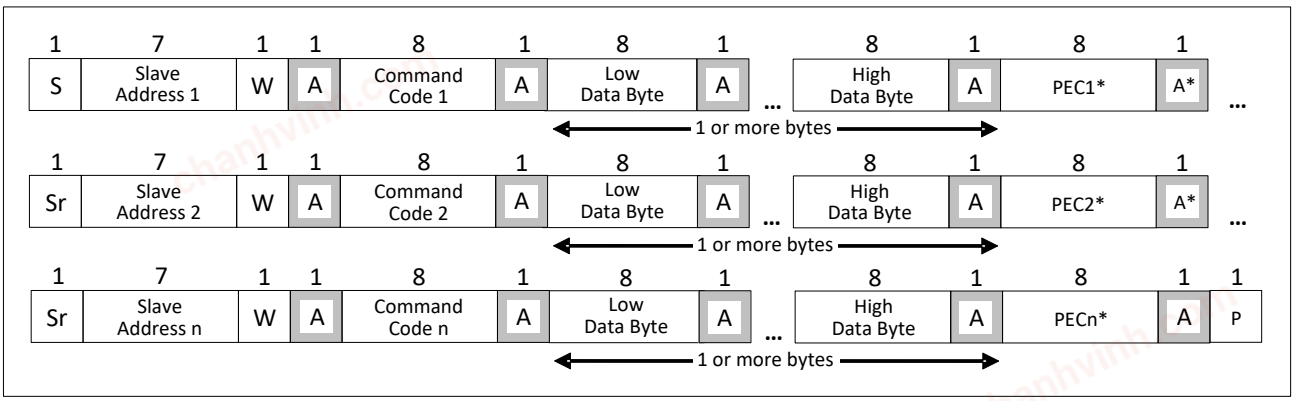

Figure 31: Group Command

chanhvinh.com

PCB PADS AND COMPONENT

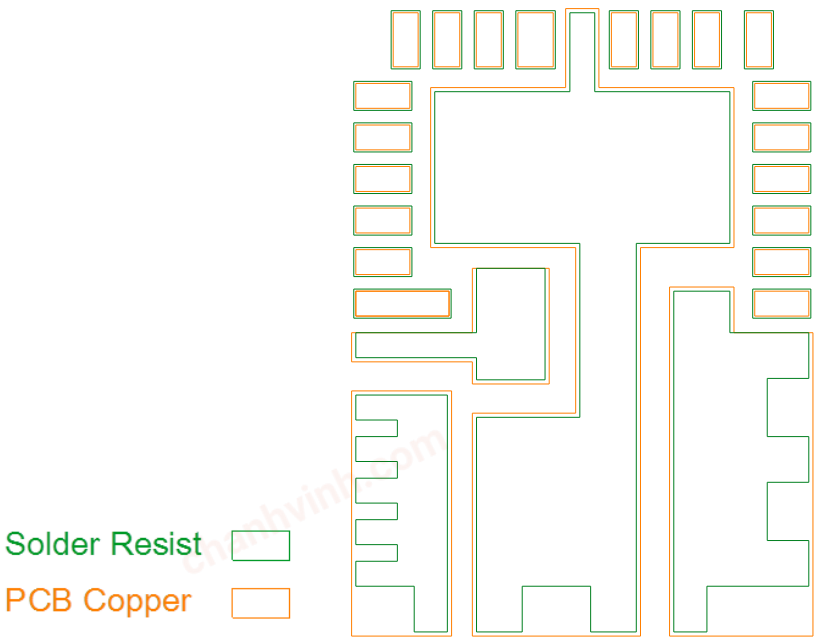

chanhvinh.com

PCB COPPER AND SOLDER RESIST (PAD SIZES)

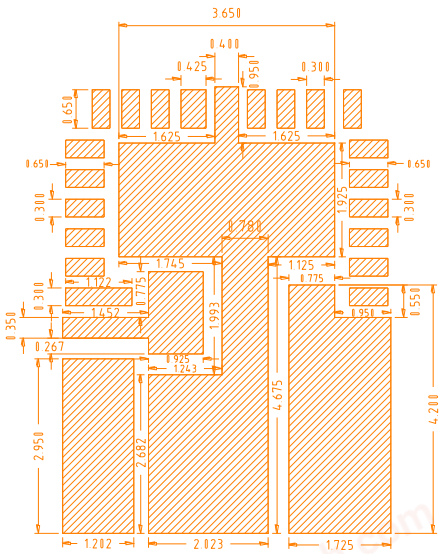

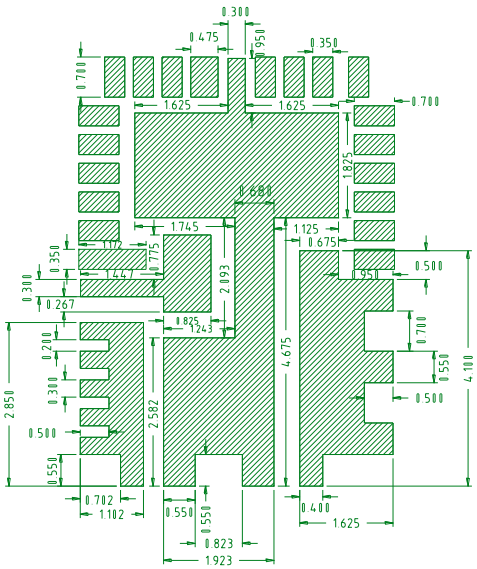

PCB COPPER AND SOLDER RESIST (PAD SPACING)

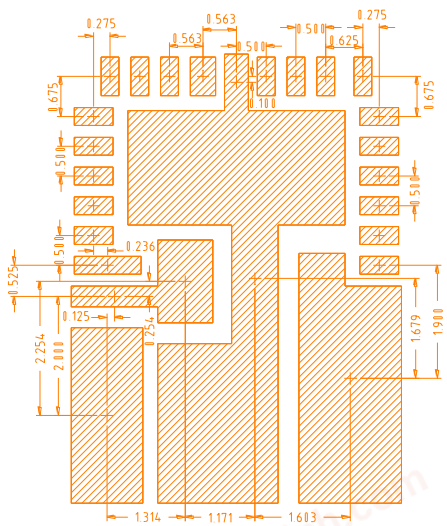

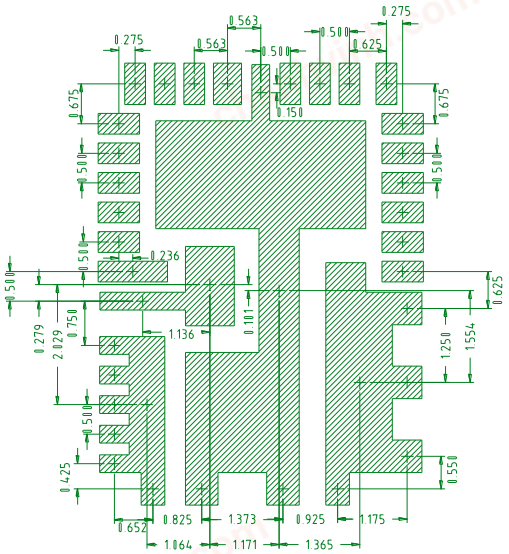

chanhvinh.com

SOLDER PASTE STENCIL (PAD SIZES)

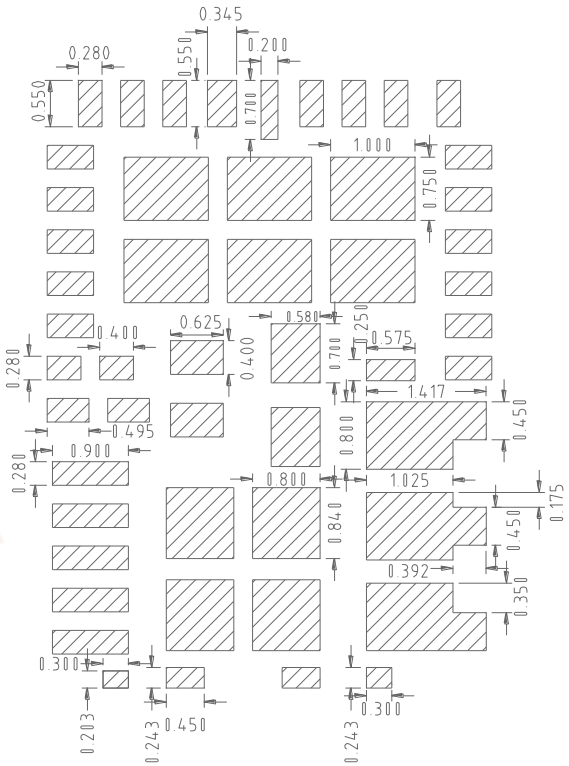

SOLDER PASTE STENCIL (PAD SPACING)

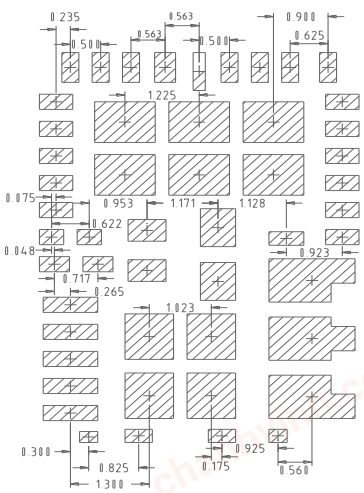

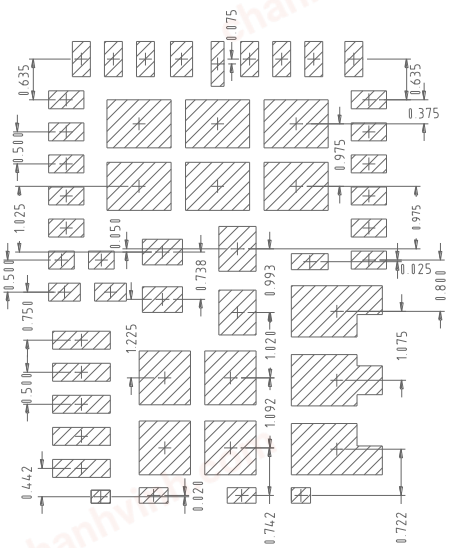

chanhvinh.com

MARKING INFORMATION FOR FINAL PRODUCTION

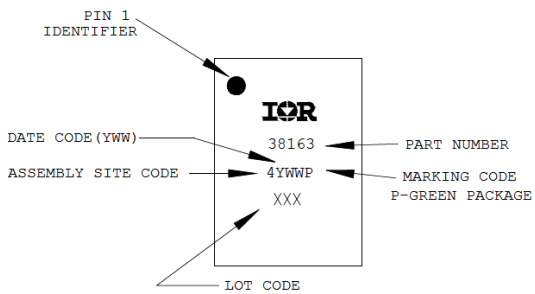

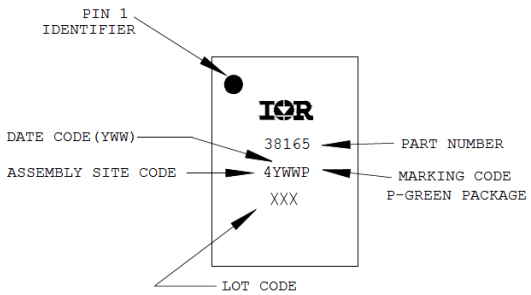

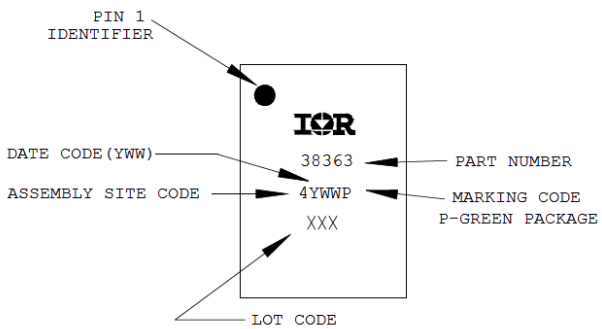

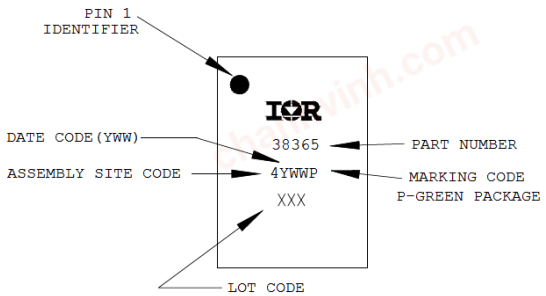

chanhvinh.com

MARKING INFORMATION FOR EARLY PRODUCTION

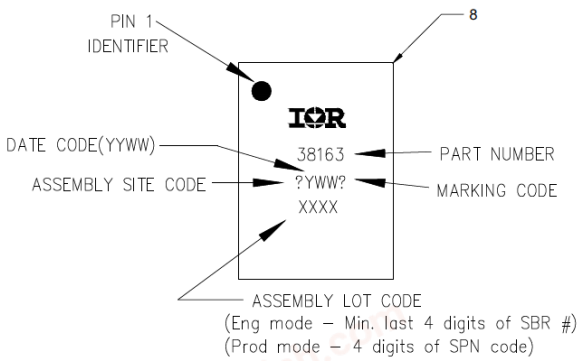

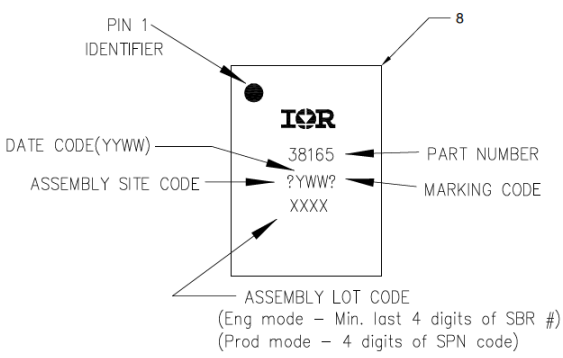

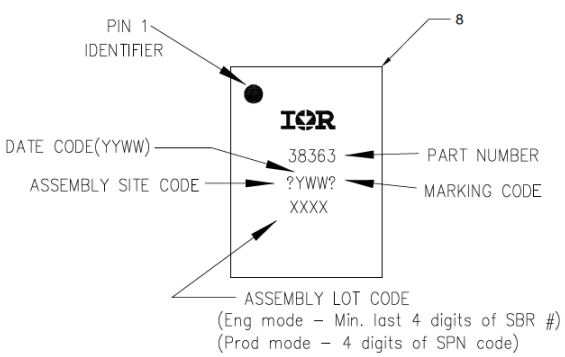

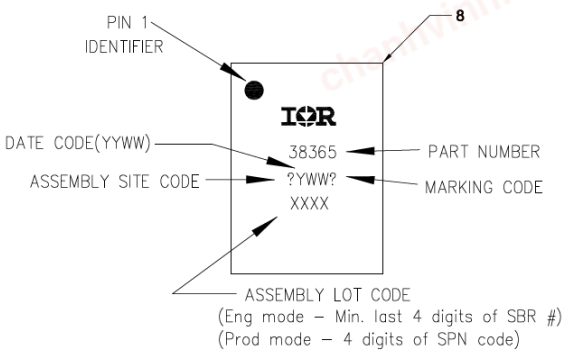

chanhvinh.com

PACKAGE INFORMATION

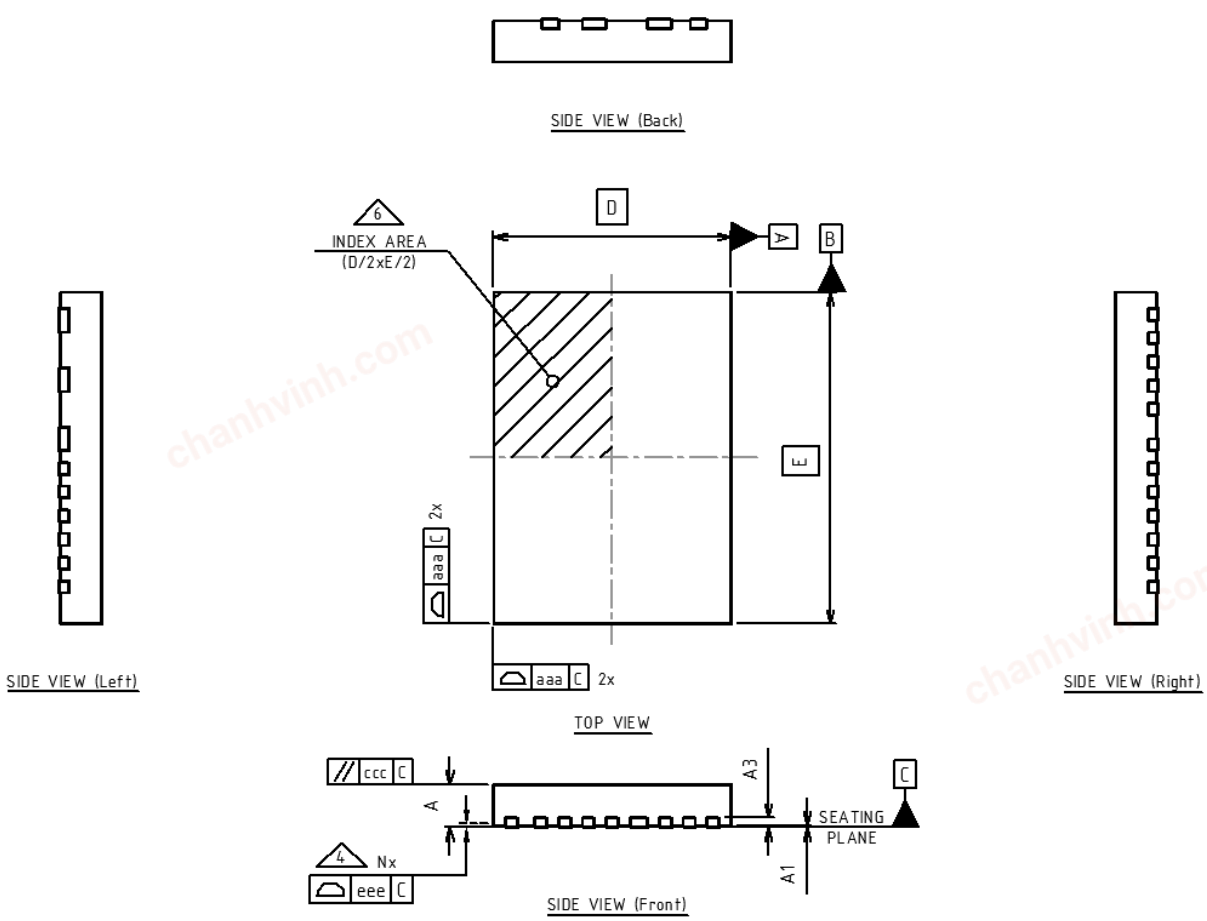

chanhvinh.com

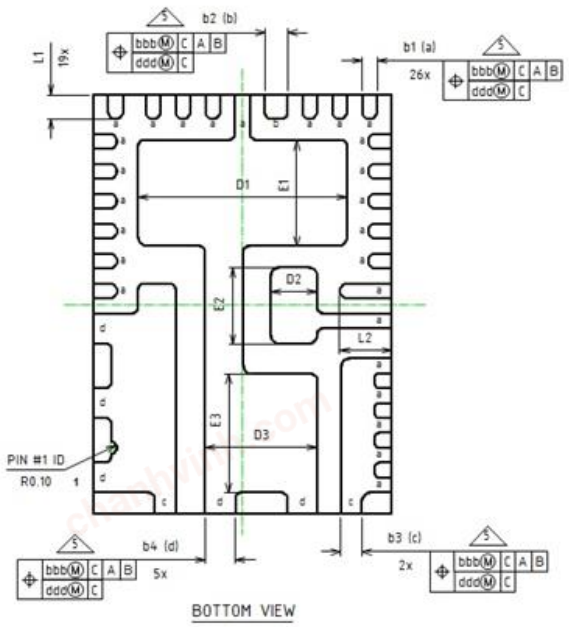

Dimension Table				
Thickness / Symbol	V			NOTE
	MINIMUM	NOMINAL	MAXIMUM	
A	0.80	0.90	1.00	
A1	0.00	0.02	0.05	
A3	---	0.20 Ref	---	
b1	0.20	0.25	0.30	5
b2	0.325	0.375	0.425	5
b3	0.30	0.35	0.40	5
b4	0.45	0.50	0.55	5
D	5.00 BSC			
E	7.00 BSC			
D1	3.35	3.50	3.60	
E1	1.625	1.775	1.875	
D2	0.625	0.775	0.875	
E2	1.14	1.29	1.39	
D3	1.723	1.873	1.973	
E3	1.832	1.982	2.082	
L1	0.30	0.40	0.50	
L2	0.772	0.872	0.972	
aaa	0.05			
bbb	0.10			
ccc	0.10			
ddd	0.05			
eee	0.08			
N	34			3
NOTES	1, 2			
LF PART NO.	443297			

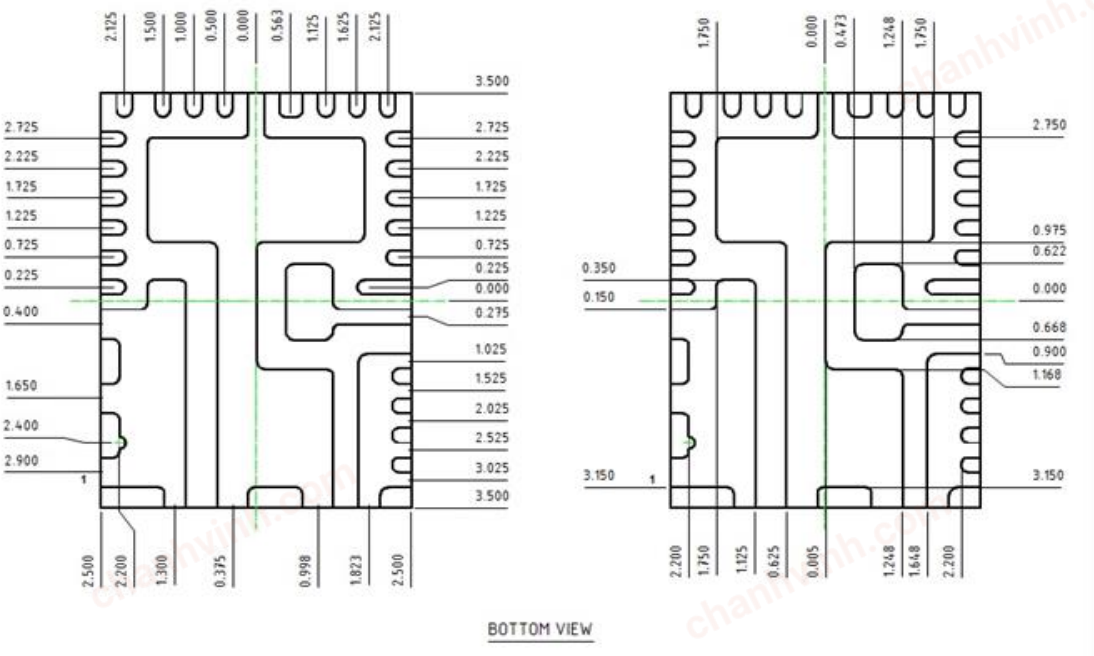

chanhvinh.com

ENVIRONMENTAL QUALIFICATIONS

Qualification Level		Industrial	
Moisture Sensitivity Level		5mm x 7mm PQFN	MSL 2 260C
ESD	Machine Model (JESD22-A115A)	JEDEC Class A	
	Human Body Model (JESD22-A114F)	JEDEC Class 1C	
	Charged Device Model (JESD22-C101F)	JEDEC Class 3	
RoHS Compliant		Yes (with Exemption 7a)	

† Qualification standards can be found at International Rectifier web site: http://www.irf.com

chanhvinh.com

SUPPORTED PMBUS™ COMMANDS

Command Code	Command Name	SMBus transaction	No. of bytes	Range	Resolution	Default Value	Description
01h	OPERATION	R/W Byte	1				Enables or disables the device and controls margining
02h	ON_OFF_CONFIG	R/W Byte	1				Configures the combination of Enable pin input and serial bus commands needed to turn the unit on and off.
03h	CLEAR_FAULTS	Send Byte	0				Clear contents of Fault registers
10h	WRITE_PROTECT	R/W Byte	1				Used to control writing to the PMBus™ device. The intent of this command is to provide protection against accidental changes.
15h	STORE_USER_ALL	Send Byte	0				Burns the User section registers into OTP memory
16h	RESTORE_USER_ALL	Send Byte	0				Copies the OTP registers into User memory
19h	CAPABILITY	Read Byte	1				Returns 1011xxxx to indicate Packet Error Checking is supported, maximum bus speed is 400kHz and SMBAlert# is supported.
1Bh	SMBALERT_MASK	Write word/Block read Process call	2				May be used to prevent a warning or fault condition from asserting the SMBALERT# signal.
21h	VOUT_COMMAND[16]	R/W Word	2	0-2.555V/V_S	5mV/V_S	1V	Causes the device to set its output voltage to the commanded value. V_S= VOUT_SCALE_LOOP
22h	VOUT_TRIM[16]	R/W Word	2	-128-+128V		0V	Available to the device user to trim the output voltage
24h	VOUT_MAX[16]	R/W Word	2			2V	Sets an upper limit on the output voltage the unit can command regardless of any other commands or combinations.
25h	VOUT_MARGIN_HIGH[16]	R/W Word	2	0-2.555V/V_S	5mV/V_S		Sets the MARGIN high voltage when commanded by OPERATION V_S= VOUT_SCALE_LOOP
26h	VOUT_MARGIN_LOW[16]	R/W Word	2	0-2.555V/V_S	5mV/V_S		Sets the MARGIN low voltage when commanded by OPERATION V_L= VOUT_SCALE_LOOP
27h	VOUT_TRANSITION_RATE[11]	R/W Word	2	0-63.9mV/us	0.0625mV/us	0.0625mV/us	Sets the rate in mV/µs at which the output should change voltage. Exponent 0 to -4 allowed.
29h	VOUT_SCALE_LOOP[11]	R/W Word	2	0.125-1		1	Compensates for external resistor divider in feedback path and in the sense path. Values 1, 0.5, 0.25, 0.125 allowed. Exponent -3 allowed.
33h	FREQUENCY_SWITCH[11]	R/W Word	2	166-1500kHz		978kHz	Sets the switching frequency, in kHz. Exponent 0 to 1 allowed.
35h	VIN_ON[11]	R/W Word	2	0-16.5V	0.5V	8V	Sets the value of the input voltage, in volts, at which the unit should start power conversion. Exponent -1 allowed.
36h	VIN_OFF[11]	R/W Word	2	0-16V	0.5V	7.0V	Sets the value of the input voltage, in volts, at which the unit, once operation has started, should stop power conversion. Exponent -1 allowed.
39h	IOUT_CAL_OFFSET[11]	R/W Word	2	-128A-+127.5A	0.25A	0A	Used to null out any offsets in the output current sensing circuit. Exponent -2 allowed.
40h	VOUT_OV_FAULT_LIMIT[16]	R/W Word	2	(25-655mV)/V_S	10mV/V_S	2.102V	Sets the value of the output voltage measured at the sense pin that causes an output overvoltage fault. V_S= VOUT_SCALE_LOOP
41h	VOUT_OV_FAULT_RESPONSE	R/W Byte	1	Ignore/Shutdown		Shutdown	Instructs the device on what action to take in response to an output overvoltage fault.

chanhvinh.com

Command Code	Command Name	SMBus transaction	No. of bytes	Range	Resolution	Default Value	Description
42h	VOUT_OV_WARN_LIMIT[16]	R/W Word	2		3.9mV	1.902V	Sets the value of the output voltage at the sense pin that causes an output voltage high warning.
43h	VOUT_UV_WARN_LIMIT[16]	R/W Word	2		3.9mV	0.902V	Sets the value of the output voltage at the Sense pin that causes an output voltage low warning.
44h	VOUT_UV_FAULT_LIMIT[16]	R/W Word	2		3.9mV	0.898V	Sets the value of the output voltage at the sense pin that causes an output undervoltage fault.
45h	VOUT_UV_FAULT_RESPONSE	R/W Byte	1	Ignore/Shutdown		Ignore	Instructs the device on what action to take in response to an output undervoltage fault.
46h	IOUT_OC_FAULT_LIMIT[11]	R/W Word	2	12-56A	4A	40A, 20A	Sets the value of the output current, in amperes, that causes the overcurrent detector to indicate an overcurrent fault. Exponent -1 allowed.
47h	IOUT_OC_FAULT_RESPONSE	R/W Byte	1			Pulse by pulse for 8 cycles followed by hiccup, retry after 20 ms	Instructs the device on what action to take in response to an output overcurrent fault.
4Ah	IOUT_OC_WARN_LIMIT[11]	R/W Word	2	0-63.5A	0.5A	35A, 17.5A	Sets the value of the output current, in amperes, that causes the overcurrent detector to indicate an overcurrent warning. Exponent -1 allowed.
4Fh	OT_FAULT_LIMIT[11]	R/W Word	2	0-150°C	1°C	125°C	Set the temperature, in degrees Celsius, of the unit at which it should indicate an Overtemperature Fault. Exponent 0 allowed.
50h	OT_FAULT_RESPONSE	R/W Byte	1	Ignore/Shutdown/Inhibit		Auto-start	Instructs the device on what action to take in response to an overtemperature fault.
51h	OT_WARN_LIMIT[11]	R/W Word	2	0-150°C	1°C	100°C	Set the temperature, in degrees Celsius, of the unit at which it should indicate an Overtemperature Warning alarm. Exponent 0 allowed.
55h	VIN_OV_FAULT_LIMIT[11]	R/W Word	2	6.25V-24V	0.25V	15V	Sets the value of the input voltage that causes an input overvoltage fault. Exponent -2 allowed.
56h	VIN_OV_FAULT_RESPONSE	R/W Byte	1	Ignore/Shutdown		Ignore	Instructs the device on what action to take in response to an input overvoltage fault.
58h	VIN_UV_WARN_LIMIT[11]	R/W Word	2	0-16V	0.5V	7.5V	Sets the value of the input voltage PVin, in volts, that causes an input overvoltage fault. Exponent -1 allowed.
5Eh	POWER_GOOD_ON[16]	R/W Word	2	(0-0.63V)/V_S	10mV/V_S	0.5V	Sets the output voltage at which an optional POWER_GOOD signal should be asserted. V_S=VOUT_SCALE_LOOP
5Fh	POWER_GOOD_OFF[16]	R/W Word	2	(0-0.63V)/V_S	10mV/V_S	0.25V	Sets the output voltage at which an optional POWER_GOOD signal should be negated. V_S=VOUT_SCALE_LOOP
60h	TON_DELAY[11]	R/W Word	2	0-127ms	1ms	0ms	Sets the time, in milliseconds, from when a start condition is received (as programmed by the ON_OFF_CONFIG command) until the output voltage starts to rise. Exponent 0 allowed.
61h	TON_RISE[11]	R/W Word	2	0-127ms	1ms	1ms	Sets the time, in milliseconds, from when the output starts to rise until the voltage has entered the regulation band. Exponent 0 allowed.
62h	TON_MAX_FAULT_LIMIT[11]	R/W Word	2	0-127ms	1ms	0 (Disabled)	Sets an upper limit, in milliseconds, on how long the unit can attempt to power up the output without reaching the output undervoltage fault limit. Exponent 0 allowed.

chanhvinh.com

Command Code	Command Name	SMBus transaction	No. of bytes	Range	Resolution	Default Value	Description
63h	TON_MAX_FAULT_RESPONSE	R/W Byte	1	Ignore/Shutdown		Ignore	Instructs the device on what action to take in response to a TON_MAX fault.
64h	TOFF_DELAY	R/W Word	2	0-127ms	1ms	0ms	Sets the time, in milliseconds, from a stop condition is received (as programmed by the ON_OFF_CONFIG command) until the unit stops transferring energy to the output. Exponent 0 allowed.
65h	TOFF_FALL	R/W Word	2	0-127ms	1ms	1ms	Sets the time, in milliseconds, in which the reference voltage ramps down to zero (If a soft off is allowed by the configuration of the ON_OFF_CONFIG command). Exponent 0 allowed.
78h	STATUS BYTE	Read Byte	1				Returns 1 byte where the bit meanings are: Bit <7> device busy fault Bit <6> output off (due to fault or enable) Bit <5> Output over-voltage fault Bit <4> Output over-current fault Bit <3> Input Under-voltage fault Bit <2> Temperature fault Bit <1> Communication/Memory/Logic fault Bit <0>: None of the above
79h	STATUS WORD	Read Word	2				Returns 2 bytes where the Low byte is the same as the STATUS_BYTE data. The High byte has bit meanings are: Bit <7> Output high or low fault Bit <6> Output over-current fault Bit <5> Input under-voltage fault Bit <4> Reserved; hardcoded to 0 Bit <3> Output power not good Bit <2:0> Hardcoded to 0
7Ah	STATUS_VOUT	Read Byte	1				Reports types of VOUT related faults.
7Bh	STATUS_IOUT	Read Byte	1				Reports types of IOUT related faults.
7Ch	STATUS_INPUT	Read Byte	1				Reports types of INPUT related faults.
7Dh	STATUS_TEMPERATURE	Read Byte	1				Returns Over Temperature warning and Over Temperature fault (OTP level). Does not report under temperature warning/fault. The bit meanings are: Bit <7> Over Temperature Fault Bit <6> Over Temperature Warning Bit <5> Under Temperature Warning Bit <4> Under Temperature Fault Bit <3:0> Reserved
7Eh	STATUS_CML	Read Byte	1				Returns 1 byte where the bit meanings are: Bit <7> Command not Supported Bit <6> Invalid data Bit <5> PEC fault Bit <4> OTP fault Bit <3:2> Reserved Bit<1> Other communication fault Bit<0> Other memory or logic fault; hardcoded to 0

chanhvinh.com

Command Code	Command Name	SMBus transaction	No. of bytes	Range	Resolution	Default Value	Description
88h	READ_VIN[11]	Read Word	2				Returns the input voltage in Volts
8Bh	READ_VOUT[16]	Read Word	2				Returns the output voltage in Volts
8Ch	READ_IOUT[11]	Read Word	2				Returns the output current in Amperes
8Dh	READ_TEMPERATURE[11]	Read Word	2				Returns the device temperature in degrees Celsius
96h	READ_POUT[11]	Read Word	2				Returns the output power in Watts
98h	PMBUS™_REVISION	Read Byte	1				Reports PMBus™ Part I rev 1.2 & PMBus™ Part II rev 1.2
99h	MFR_ID	Block Read/Write	2			IR	Returns 2 bytes used to read the manufacturer's ID. User can overwrite with any value.
9Ah	MFR_MODEL	Block Read/Write	3			Set 000000	If set to 0, returns a 1 byte code corresponding to IC_DEVICE_ID. Alternatively, user can set to any non-zero value
9Bh	MFR_REVISION	Block Read/Write	3			Set 000000	If set to 0, returns a 1 byte code corresponding to IC_DEVICE_REV. Alternatively, user can set to any non-zero value
ADh	IC_DEVICE_ID	Block Read	2				Used to read the type or part number of an IC. IR38163: 63h IR38165:64h IR38363: 67h IR38365: 68h
AEh	IC_DEVICE_REV	Block Read	1				Used to read the revision of the IC
D0h	MFR_READ_REG	Custom	2				Manufacturer Specific: Read from configuration registers
D1h	MFR_WRITE_REG	Custom	2				Manufacturer Specific: Write to configuration & status registers
D8h	MFR_TPGDLY	R/W Word	2	0-10ms	1ms	0ms	Sets the delay in ms, between the output voltage entering the regulation window and the assertion of the PGood signal. Exponent 0 allowed.
D9h	MFR_FCCM	R/W Byte	1	0-1		1 (CCM)	Allows the user to choose between forced continuous conduction mode and adaptive on-time operation at light load.
D6h	MFR_I2C_address	R/W Word	1	0-7Fh		10h	Sets and returns the device I2C base address
DBh	MFR_VOUT_PEAK[16]	Read Word	2				Continuously records and reports the highest value of Read Vout.
DCh	MFR_IOUT_PEAK[11]	Read Word	2				Continuously records and reports the highest value of Read Iout.
DDh	MFR_TEMPERATURE_PEAK[11]	Read Word	2				Continuously records and reports the highest value of Read_Temperature

Notes

[11] Uses LINEAR11 format

[16] Uses LINEAR16 format with exponent set to-8

chanhvinh.com

Revision History

3.0	3/9/2017	Initial Release.
3.1	3/20/2017	Changed 1.8V LDO regulation current to 1 mA, added a note on bootstrap circuit and layout recommendations, stencil drawings updated
3.2	5/8/2017	Added requirement of 1 ohm series resistor for PVin>14V
3.3	12/12/2017	Fixed OCP description and diagram plus updated other functionality sections. Added recommendation to use 10uF bypass capacitor at P1V8 pin. Updated the default values on the PMBUS™ section. Updated application diagrams.
3.4	9/12/2018	Updated packaging markings, added thermal de-rating curves, corrected PMBUS revision.
3.5	4/1/2019	Updated diagrams to show SAlert# instead of SAlert. Remove the 5900 ppm/C OC set parameter. This is an internal tempco parameter used in the OCP circuit that is misleading. The OCP circuit is more complex and this one temp co does not represent the OCP relationship across temperature.
3.6	6/7/2019	Removed comments in the revision history that came before the initial release. Post Rev 3.0 comments.

chanhvinh.com

Published by
Infineon Technologies AG
81726 München, Germany
© Infineon Technologies AG 2015
All Rights Reserved.

IMPORTANT NOTICE

The information given in this document shall in no event be regarded as a guarantee of conditions or characteristics ("Beschaffenheitsgarantie"). With respect to any examples, hints or any typical values stated herein and/or any information regarding the application of the product, Infineon Technologies hereby disclaims any and all warranties and liabilities of any kind, including without limitation warranties of non-infringement of intellectual property rights of any third party.

In addition, any information given in this document is subject to customer's compliance with its obligations stated in this document and any applicable legal requirements, norms and standards concerning customer's products and any use of the product of Infineon Technologies in customer's applications.

The data contained in this document is exclusively intended for technically trained staff. It is the responsibility of customer's technical departments to evaluate the suitability of the product for the intended application and the completeness of the product information given in this document with respect to such application.

For further information on the product, technology, delivery terms and conditions and prices please contact your nearest Infineon Technologies office (www.infineon.com).

WARNINGS

Due to technical requirements products may contain dangerous substances. For information on the types in question please contact your nearest Infineon Technologies office.

Except as otherwise explicitly approved by Infineon Technologies in a written document signed by authorized representatives of Infineon Technologies, Infineon Technologies' products may not be used in any applications where a failure of the product or any consequences of the use thereof can reasonably be expected to result in personal injury.