chanhvinh.com

Public

IPT60R120CM8
Final datasheet

MOSFET

600V CoolMOS™ CM8 Power Transistor

Built on Infineon's world-class super-junction MOSFET platform with an integrated fast body diode, making it suitable for a wide range of applications. It enables highest power density at lowest possible system cost with superior reliability. It is enhancing Infineon's WBG offering and the successor of the 600 V CoolMOS™ 7 MOSFET family.

TOLL

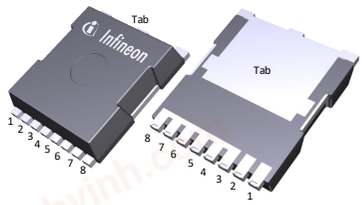

Features

- Best-In-Class SJ Mosfet Performance
- Address broad hard and soft switching applications with outstanding commutation ruggedness
- Integrated fast body diode and ESD protection
- .XT interconnection technology for best-in-class thermal performance

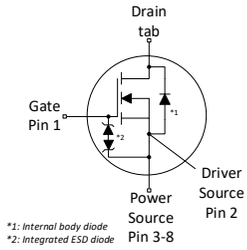

Benefits

- Provides the best price performance ratio with Best-In-Class SJ Mosfet Performance
- Ease of use and shorter design in cycle
- Enable multiple topologies
- 14-42% lower R_{th} for improved thermal performance

Potential applications

- Datacenter, AI server, Telecom Power Supply
- Micro and Residential Hybrid Inverter
- Portable and Residential Energy Storage, UPS
- EV Charging, Light electric vehicles, Electric Forklift
- High Voltage Solid State Power Distribution
- Home & Professional Tools
- Charger, Adapters, TV and Console SMPS

Product validation

Fully qualified according to JEDEC for Industrial Applications

Please note: For MOSFET paralleling the use of ferrite beads on the gate or separate totem poles is generally recommended.

Table 1 Key performance parameters

Parameter	Value	Unit
V_{DS} @ $T_{j,max}$	650	V
$R_{DS(on),max}$	120	mΩ
$Q_{g,typ}$	24	nC
$I_{D,pulse}$	68	A
E_{oss} @ 400V	3.4	µJ
Body diode di_F/dt	1300	A/µs
ESD class (HBM)	2	

Type / Ordering code	Package	Marking	Related links
IPT60R120CM8	PG-HSOF-8	60R120C8	see Appendix A

chanhvinh.com

Table of contents

Description 1
Maximum ratings 3
Thermal characteristics 4
Electrical characteristics 5
Electrical characteristics diagrams 7
Test circuits 11
Package outlines 12
Appendix A 15
Revision history 16
Trademarks 16
Disclaimer 16

chanhvinh.com

1 Maximum ratings

at T_j = 25°C, unless otherwise specified

Table 2 Maximum ratings

Parameter	Symbol	Values			Unit	Note / Test condition
		Min.	Typ.	Max.		
Continuous drain current [1]	I_D	-	-	24	A	T_C=25°C
Continuous drain current	I_D	-	-	15	A	T_C=100°C
Pulsed drain current [2]	$I_{D,pulse}$	-	-	68	A	T_C=25°C
Avalanche energy, single pulse	E_{AS}	-	-	40	mJ	I_D=2.2A; V_{DD}=50V; see table 10
Avalanche energy, repetitive	E_{AR}	-	-	0.20	mJ	
Avalanche current, single pulse	I_{AS}	-	-	2.2	A	-
MOSFET dv/dt ruggedness	dv/dt	-	-	120	V/ns	V_{DS}=0...400V
Gate source voltage (static)	V_{GS}	-20	-	20	V	static;
Gate source voltage (dynamic)	V_{GS}	-30	-	30	V	AC (f>1 Hz)
Power dissipation	P_{tot}	-	-	154	W	T_C=25°C
Storage temperature	T_{stg}	-55	-	150	°C	-
Operating junction temperature	T_j	-55	-	150	°C	
Extended operating junction temperature	T_j	150	-	175	°C	≤50 h in the application lifetime
Mounting torque	-	-	-	-	Ncm	-
Continuous diode forward current	I_S	-	-	24	A	T_C=25°C
Diode pulse current [2]	$I_{S,pulse}$	-	-	68	A	
Reverse diode dv/dt [3]	dv/dt	-	-	70	V/ns	V_{DS}=0...400V, I_{SD}≤24A, T_j=25°C see table 8
Maximum diode commutation speed	di_F/dt	-	-	1300	A/µs	
Insulation withstand voltage	V_{ISO}	-	-	n.a.	V	V_{rms}, T_C=25°C, t=1min

[1] Limited by $T_{j,max}$.

[2] Pulse width t_p limited by $T_{j,max}$

[3] Identical low side and high side switch with identical R_G

chanhvinh.com

2 Thermal characteristics

Table 3 Thermal characteristics

Parameter	Symbol	Values			Unit	Note / Test condition
		Min.	Typ.	Max.		
Thermal resistance, junction - case	R_{thJC}	-	-	0.81	K/W	-
Thermal resistance, junction - ambient	R_{thJA}	-	-	62	K/W	device on PCB, minimal footprint
Thermal resistance, junction - ambient for SMD version	R_{thJA}	-	-	-	K/W	Device on 40mm*40mm*1.5mm epoxy PCB FR4 with 6cm² (one layer, 70µm thickness) copper area for drain connection and cooling. PCB is vertical without air stream cooling.
Soldering temperature, wave- & reflow soldering allowed	T_{sold}	-	-	260	°C	reflow MSL1

chanhvinh.com

3 Electrical characteristics

at T_j=25°C, unless otherwise specified

Table 4 Static characteristics

Parameter	Symbol	Values			Unit	Note / Test condition
		Min.	Typ.	Max.		
Drain-source breakdown voltage	$V_{(BR)DSS}$	600	-	-	V	V_{GS}=0V, I_D=1mA
Gate threshold voltage	$V_{(GS)th}$	3.7	4.2	4.7	V	V_{DS}=V_{GS}, I_D=0.2mA
Zero gate voltage drain current	I_{DSS}	-	- 31.2	1 -	µA	V_{DS}=600V, V_{GS}=0V, T_j=25°C V_{DS}=600V, V_{GS}=0V, T_j=150°C
Gate-source leakage current	I_{GSS}	-	-	1.2	µA	V_{GS}=20V, V_{DS}=0V
Drain-source on-state resistance	$R_{DS(on)}$	-	0.100 0.22	0.120 -	Ω	V_{GS}=10V, I_D=8.3A, T_j=25°C V_{GS}=10V, I_D=8.3A, T_j=150°C
Gate resistance	R_G	-	9.8	-	Ω	f=1MHz

Table 5 Dynamic characteristics

Parameter	Symbol	Values			Unit	Note / Test condition
		Min.	Typ.	Max.		
Input capacitance	C_{iss}	-	1045	-	pF	V_{GS}=0V, V_{DS}=400V, f=250kHz
Output capacitance	C_{oss}	-	15	-	pF	
Effective output capacitance, energy related [4]	$C_{o(er)}$	-	42	-	pF	V_{GS}=0V, V_{DS}=0...400V
Effective output capacitance, time related [5]	$C_{o(tr)}$	-	421	-	pF	I_D=constant, V_{GS}=0V, V_{DS}=0...400V
Turn-on delay time	$t_{d(on)}$	-	16.5	-	ns	V_{DD}=400V, V_{GS}=13V, I_D=4.0A, R_G=10.0Ω; see table 9
Rise time	t_r	-	6	-	ns	
Turn-off delay time	$t_{d(off)}$	-	89.5	-	ns	
Fall time	t_f	-	10.6	-	ns	

[4] $C_{o(er)}$ is a fixed capacitance that gives the same stored energy as C_{oss} while V_{DS} is rising from 0 to 400V

[5] $C_{o(tr)}$ is a fixed capacitance that gives the same charging time as C_{oss} while V_{DS} is rising from 0 to 400V

chanhvinh.com

Table 6 Gate charge characteristics

Parameter	Symbol	Values			Unit	Note / Test condition
		Min.	Typ.	Max.		
Gate to source charge	Q_{gs}	-	6	-	nC	V_{DD}=400V, I_D=4.0A, V_{GS}=0 to 10V
Gate to drain charge	Q_{gd}	-	9	-	nC	
Gate charge total	Q_g	-	24	-	nC	
Gate plateau voltage	$V_{plateau}$	-	6.1	-	V	

Table 7 Reverse diode characteristics

Parameter	Symbol	Values			Unit	Note / Test condition
		Min.	Typ.	Max.		
Diode forward voltage	V_{SD}	-	0.9	-	V	V_{GS}=0V, I_F=4.0A, T_j=25°C
Reverse recovery time	t_{rr}	-	69.53	86.91	ns	V_R=400V, I_F=4.0A, di_F/dt=100A/µs; see table 8
Reverse recovery charge	Q_{rr}	-	0.24	0.36	µC	
Peak reverse recovery current	I_{rrm}	-	6.87	-	A	

chanhvinh.com

4 Electrical characteristics diagrams

Diagram 1: Power dissipation

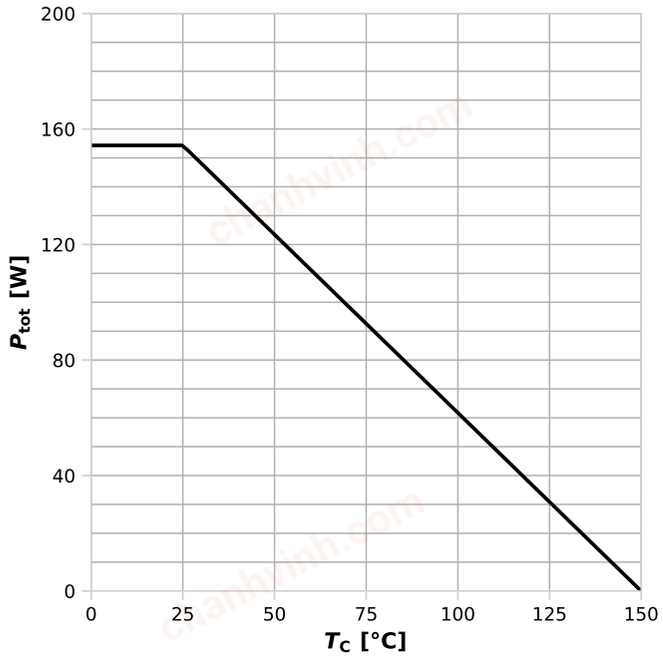

$P_{tot}=f(T_C)$

Diagram 2: Safe operating area

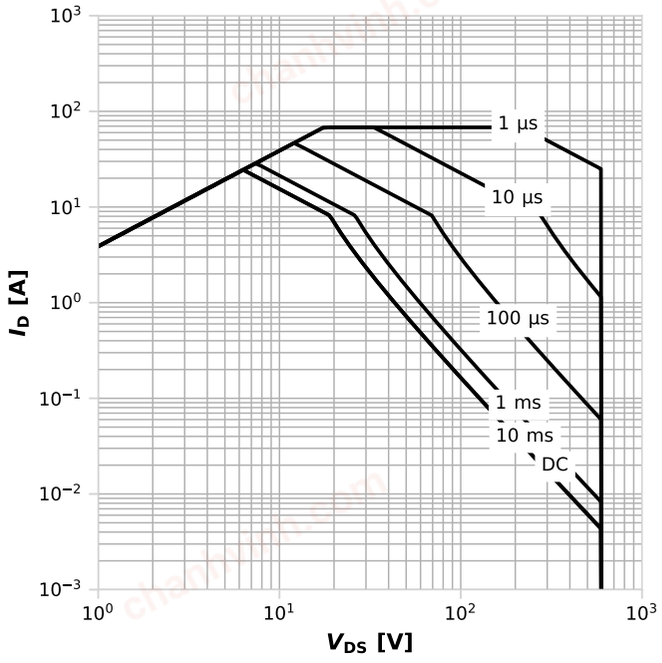

$I_D=f(V_{DS})$; T_C=25 °C; D=0; parameter: t_p

Diagram 3: Safe operating area

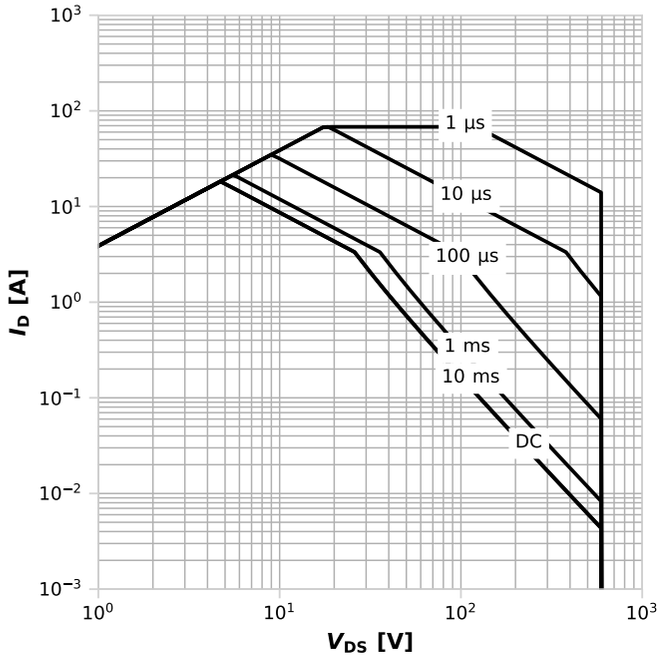

$I_D=f(V_{DS})$; T_C=80 °C; D=0; parameter: t_p

Diagram 4: Max. transient thermal impedance

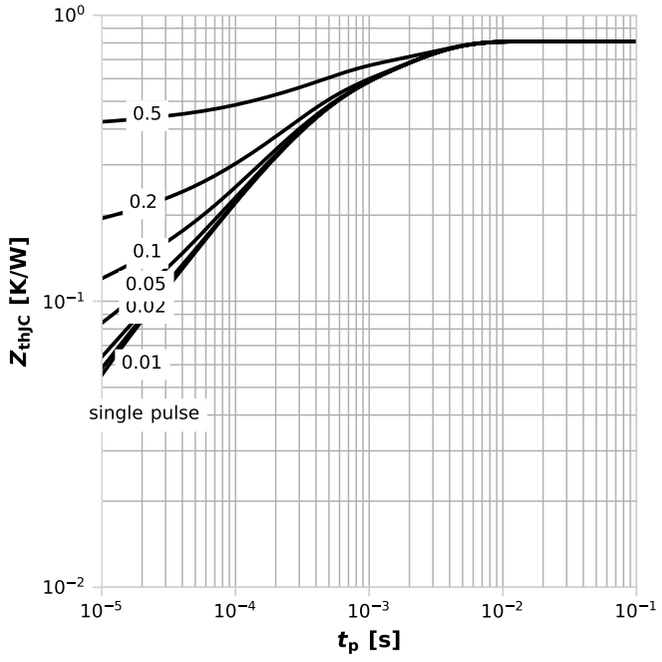

$Z_{thJC}=f(t_P)$; parameter: $D=t_p/T$

chanhvinh.com

Diagram 5: Typ. output characteristics

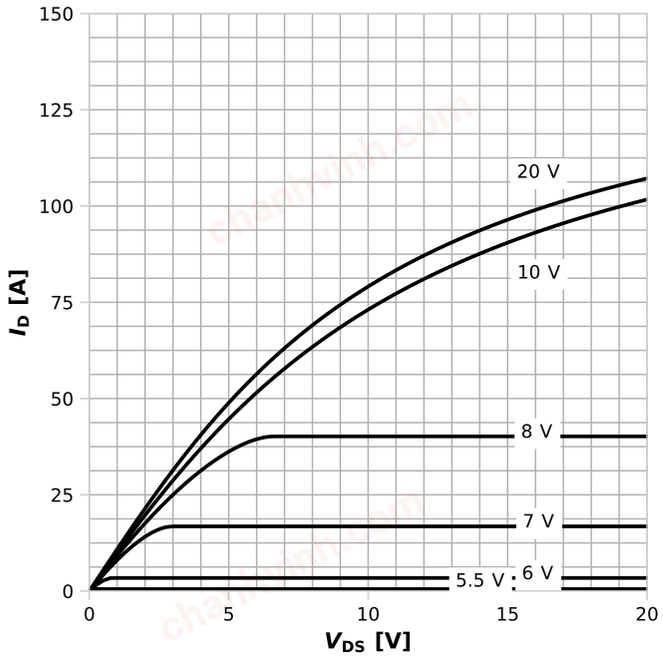

$I_D=f(V_{DS})$; T_j=25 °C; parameter: V_{GS}

Diagram 6: Typ. output characteristics

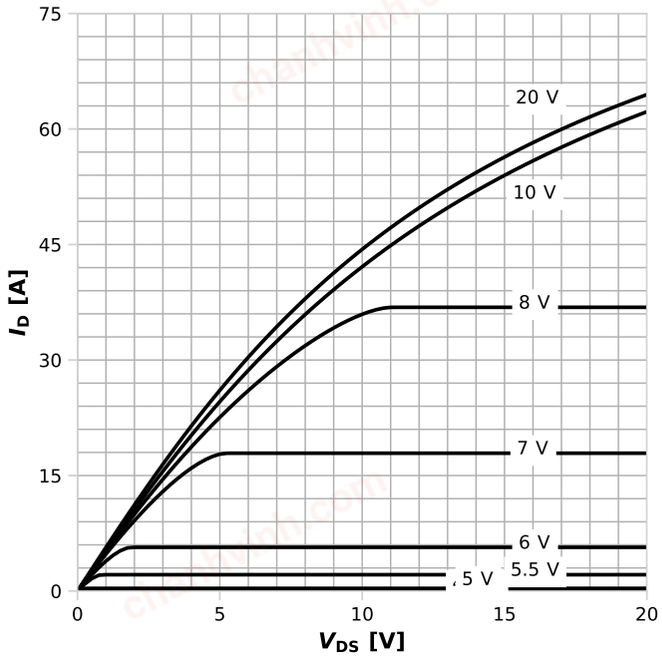

$I_D=f(V_{DS})$; T_j=125 °C; parameter: V_{GS}

Diagram 7: Typ. drain-source on-state resistance

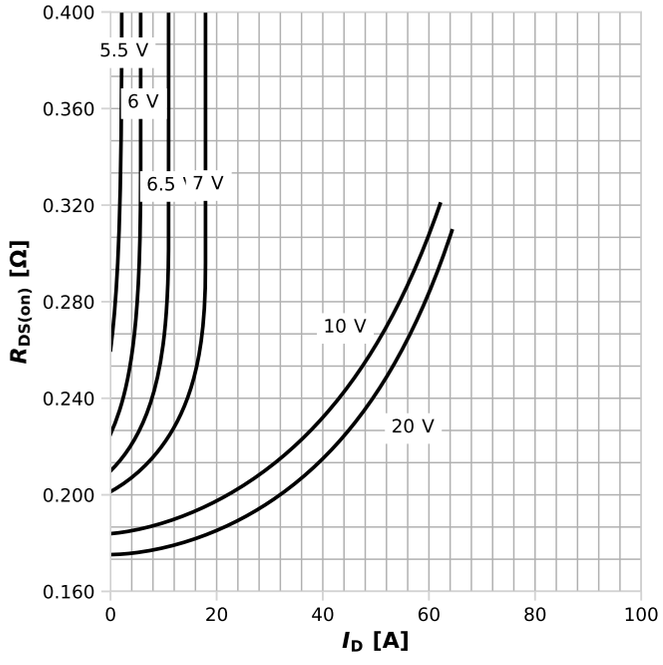

$R_{DS(on)}=f(I_D)$; T_j=125 °C; parameter: V_{GS}

Diagram 8: Drain-source on-state resistance

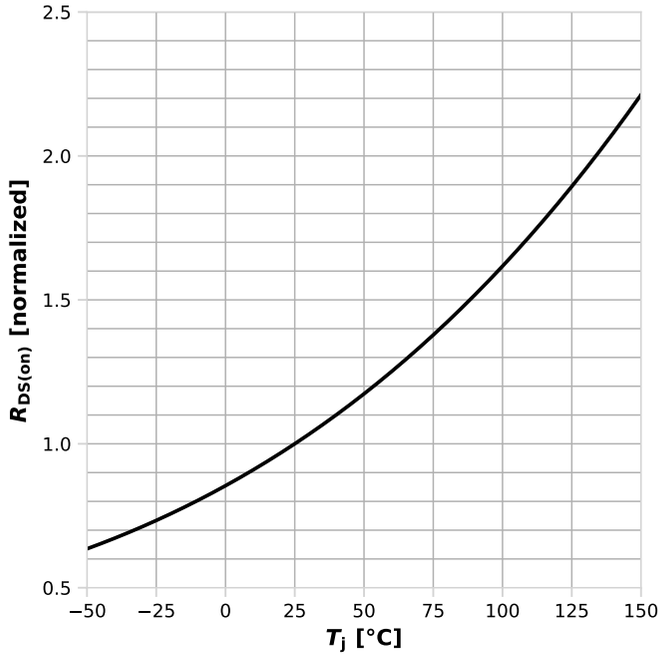

$R_{DS(on)}=f(T_j)$; I_D=8.3 A; V_{GS}=10 V

chanhvinh.com

Diagram 9: Typ. transfer characteristics

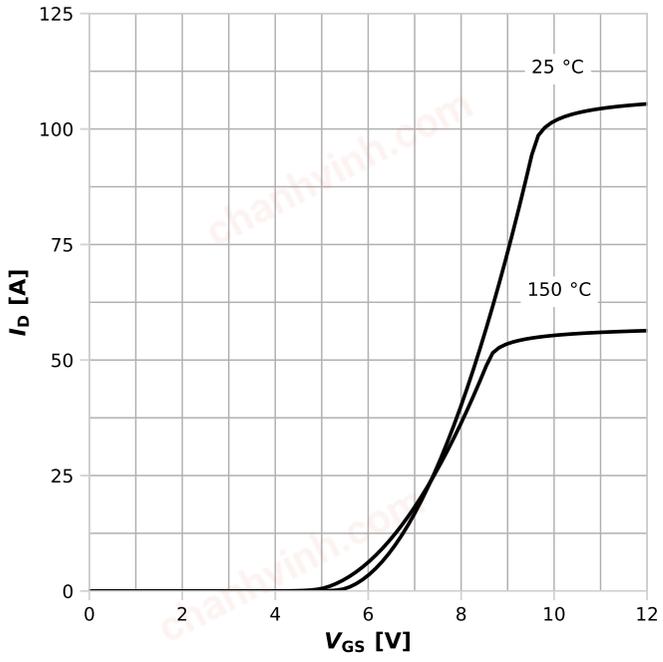

I_D=f(V_{GS}); V_{DS}=20V; parameter: T_j

Diagram 10: Typ. gate charge

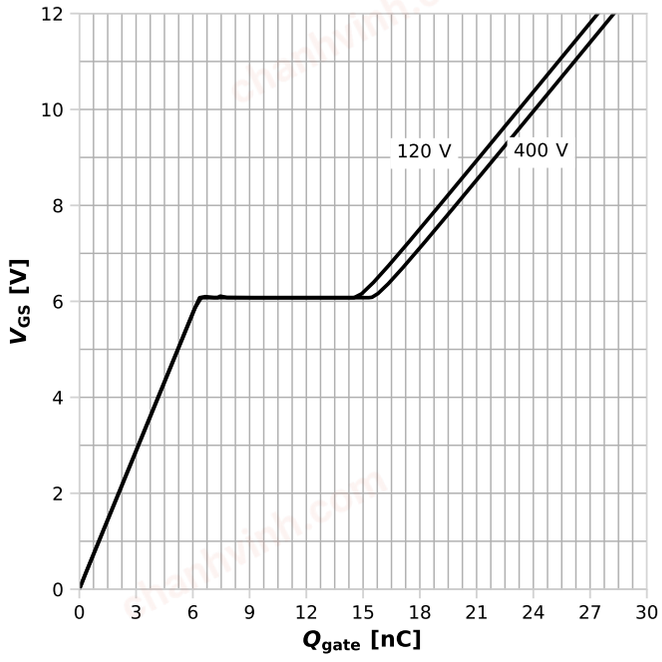

V_{GS}=f(Q_{gate}); I_D=4.0 A pulsed; parameter: V_{DD}

Diagram 11: Forward characteristics of reverse diode

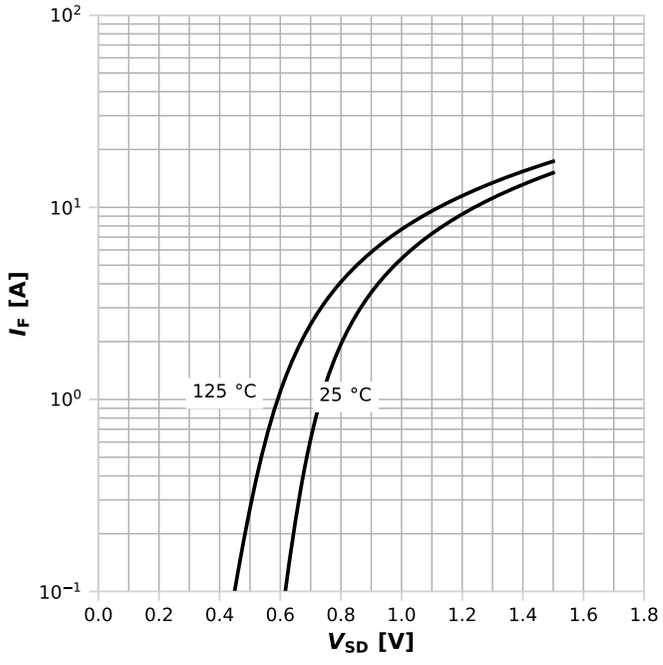

I_F=f(V_{SD}); parameter: T_j

Diagram 12: Avalanche energy

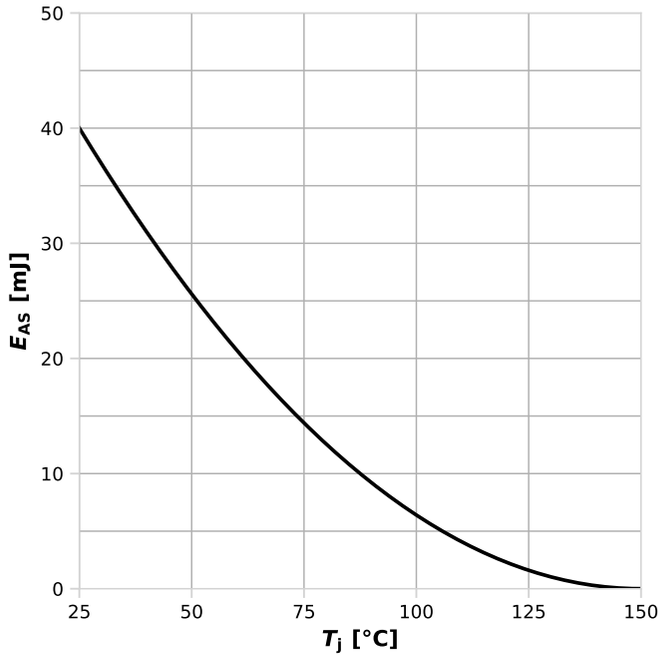

E_{AS}=f(T_j); I_D=2.2 A; V_{DD}=50 V

chanhvinh.com

Diagram 13: Drain-source breakdown voltage

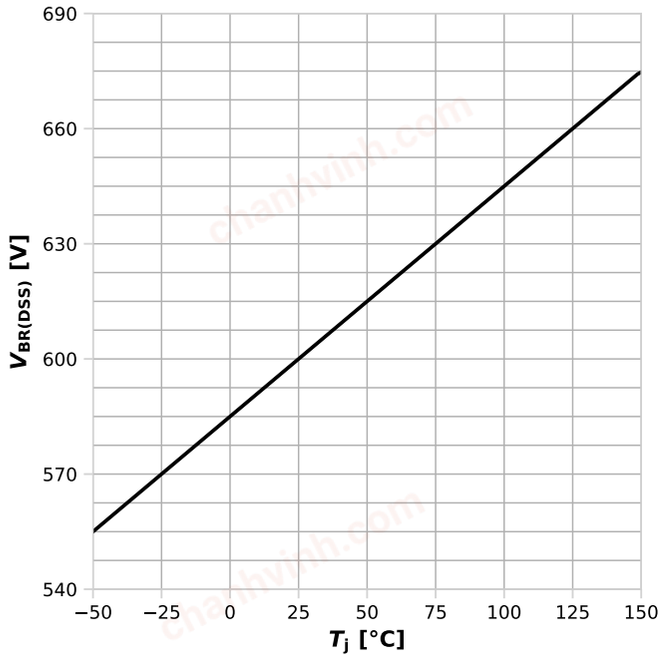

$V_{BR(DSS)}$=f(T_j); I_D=1 mA

Diagram 14: Typ. capacitances

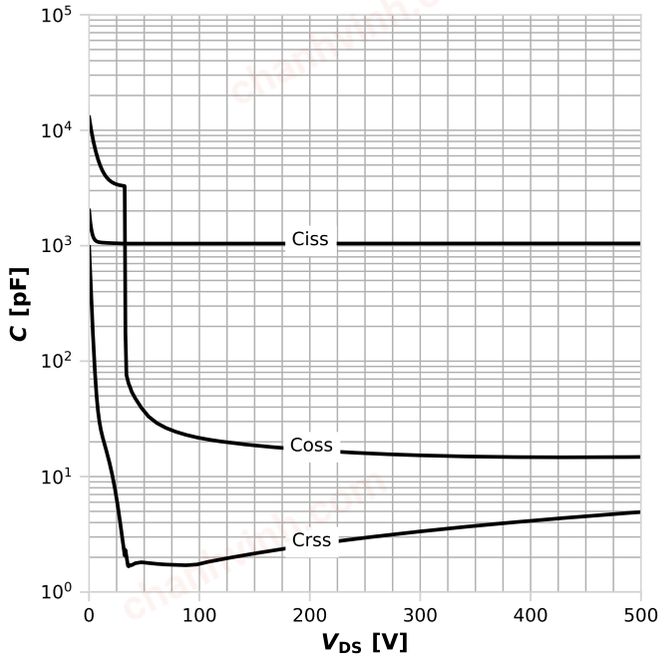

C=f(V_{DS}); V_{GS}=0 V; f=250 kHz

Diagram 15: Typ. Coss stored energy

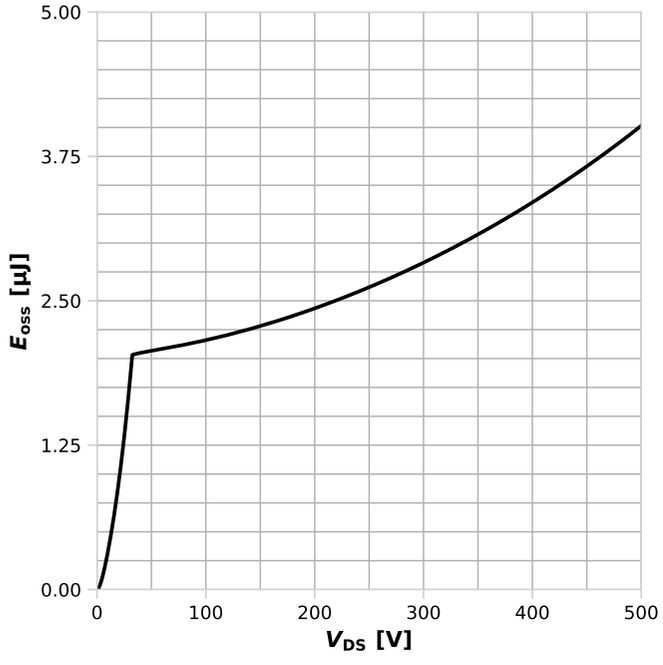

E_{oss}=f(V_{DS})

chanhvinh.com

5 Test circuits

Table 8 Diode characteristics

Test circuit for diode characteristics	Diode recovery waveform
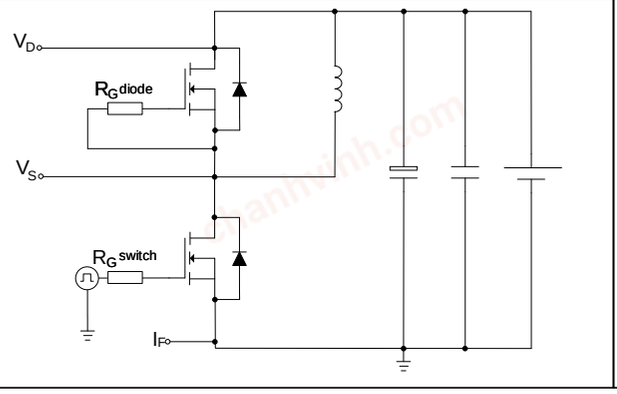	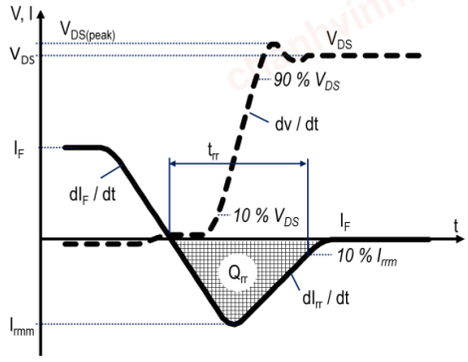

Table 9 Switching times

Switching times test circuit for inductive load	Switching times waveform
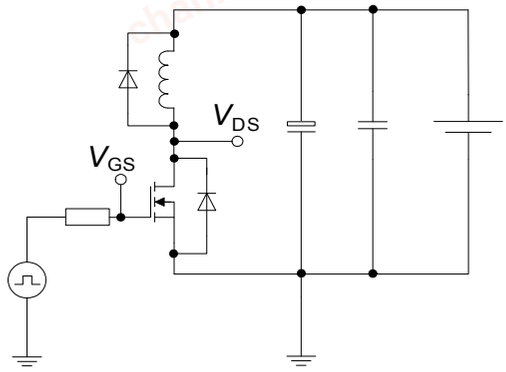	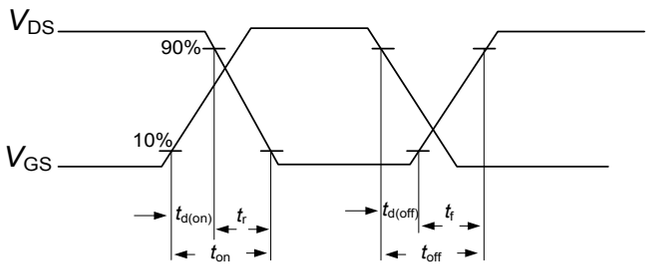

Table 10 Unclamped inductive load

Unclamped inductive load test circuit	Unclamped inductive waveform
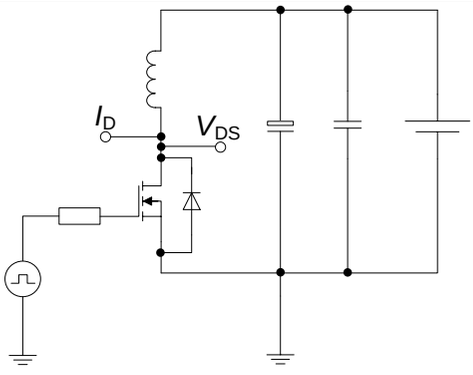	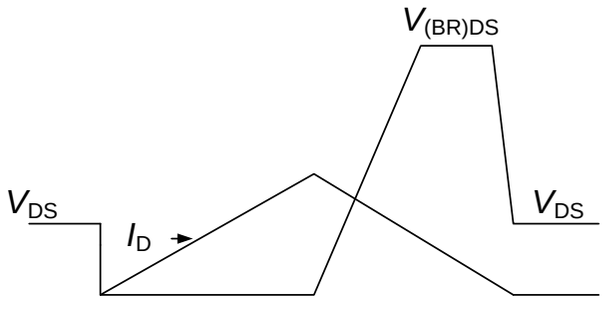

chanhvinh.com

6 Package outlines

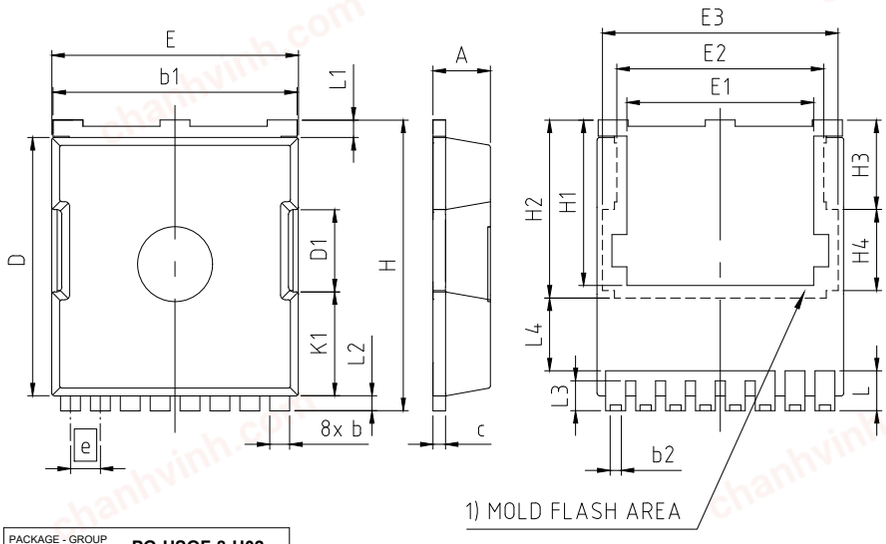

PACKAGE - GROUP NUMBER:	PG-HSOF-8-U02	
DIMENSIONS	MILLIMETERS	
	MIN.	MAX.
A	2.20	2.40
b	0.70	0.90
b1	9.70	9.90
b2	0.42	0.50
c	0.40	0.60
D	10.28	10.58
D1	3.30	
E	9.70	10.10
E1	7.50	
E2	8.50	
E3	9.46	
e	1.20 (BSC)	
H	11.48	11.88
H1	6.55	6.95
H2	7.15	
H3	3.59	
H4	3.26	
N	8	
K1	4.18	
L	1.40	1.80
L1	0.50	0.90
L2	0.50	0.70
L3	1.00	1.30
L4	2.62	2.81

1) PARTIALLY COVERED WITH MOLD FLASH

Figure 1 Outline PG-HSOF-8, dimensions in mm

chanhvinh.com

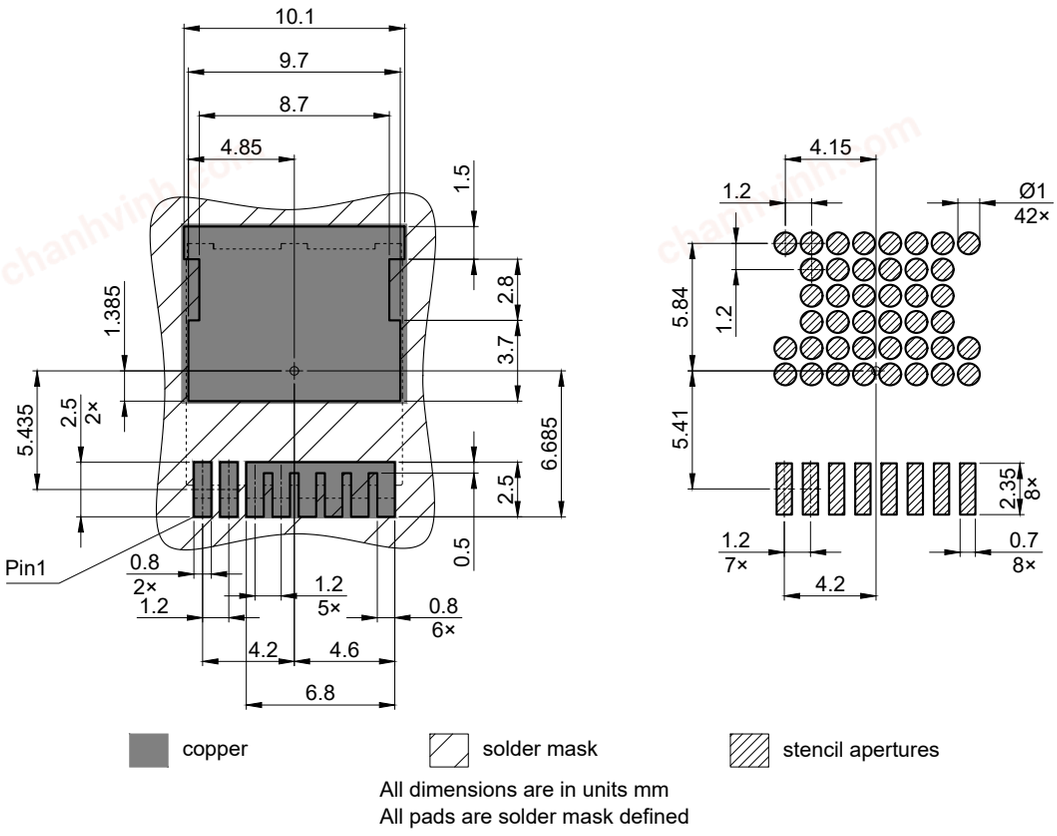

Figure 2 Footprint drawing PG-HSOF-8, dimensions in mm

chanhvinh.com

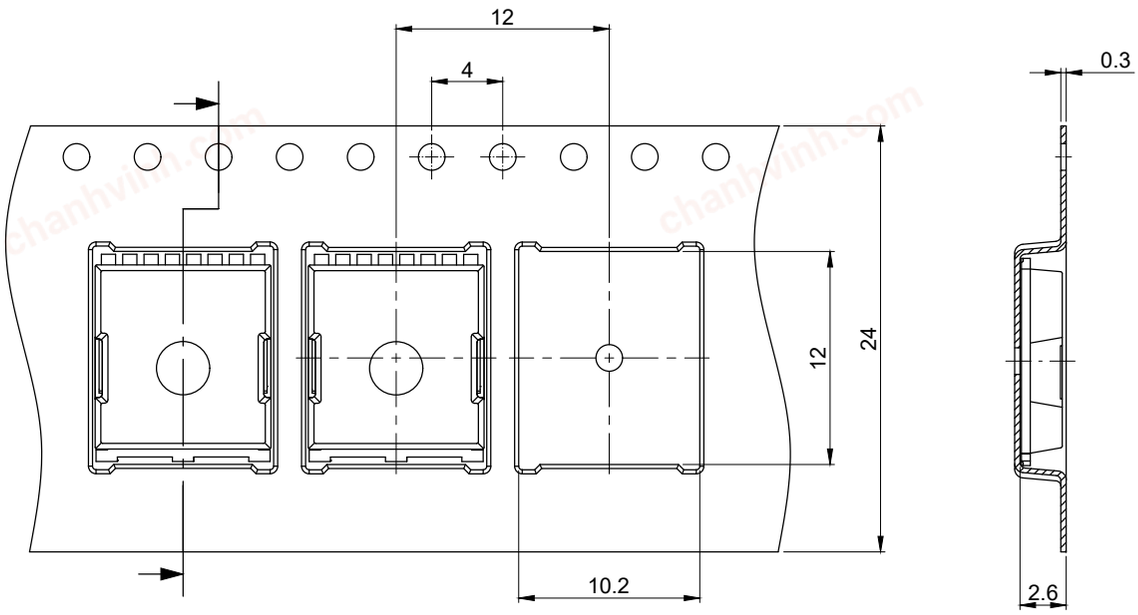

All dimensions are in units mm

The drawing is in compliance with ISO 128-30, Projection Method 1 [ ]

Figure 3 Packaging variant PG-HSOF-8, dimensions in mm

chanhvinh.com

7 Appendix A

Table 11 Related links

- IFX CoolMOS CM8 Webpage
- IFX CoolMOS CM8 application note
- IFX CoolMOS CM8 simulation model
- IFX Design tools

chanhvinh.com

Revision history

IPT60R120CM8

Revision 2024-12-19, Rev. 2.0

Previous revisions

Revision	Date	Subjects (major changes since last revision)
2.0	2024-12-19	Release of final version

Trademarks
All referenced product or service names and trademarks are the property of their respective owners.

We Listen to Your Comments Any information within this document that you feel is wrong, unclear or missing at all? Your feedback will help us to continuously improve the quality of this document. Please send your proposal (including a reference to this document) to: **erratum@infineon.com**

Published by
Infineon Technologies AG
81726 München, Germany
© 2024 Infineon Technologies AG
All Rights Reserved.

Legal Disclaimer
The information given in this document shall in no event be regarded as a guarantee of conditions or characteristics (“Beschaffenheitsgarantie”) . With respect to any examples, hints or any typical values stated herein and/or any information regarding the application of the product, Infineon Technologies hereby disclaims any and all warranties and liabilities of any kind, including without limitation warranties of non-infringement of intellectual property rights of any third party.

In addition, any information given in this document is subject to customer’s compliance with its obligations stated in this document and any applicable legal requirements, norms and standards concerning customer’s products and any use of the product of Infineon Technologies in customer’s applications.

The data contained in this document is exclusively intended for technically trained staff. It is the responsibility of customer’s technical departments to evaluate the suitability of the product for the intended application and the completeness of the product information given in this document with respect to such application.

Information
For further information on technology, delivery terms and conditions and prices please contact your nearest Infineon Technologies Office (www.infineon.com).

Warnings
Due to technical requirements, components may contain dangerous substances. For information on the types in question, please contact the nearest Infineon Technologies Office.
The Infineon Technologies component described in this Data Sheet may be used in life-support devices or systems and/or automotive, aviation and aerospace applications or systems only with the express written approval of Infineon Technologies, if a failure of such components can reasonably be expected to cause the failure of that life-support, automotive, aviation and aerospace device or system or to affect the safety or effectiveness of that device or system. Life support devices or systems are intended to be implanted in the human body or to support and/or maintain and sustain and/or protect human life. If they fail, it is reasonable to assume that the health of the user or other persons may be endangered.