chanhvinh.com

MOSFET

650V CoolMOS™ CFD7 SJ Power Device

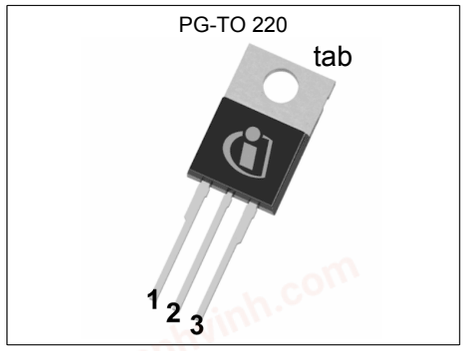

The latest 650 V CoolMOS™ CFD7 extends the voltage class offering of the CFD7 family and is a successor to the 650 V CoolMOS™ CFD2. Resulting from improved switching performance and excellent thermal behavior, 650 V CooMOS™ CFD7 offers highest efficiency in resonant switching topologies, such as LLC and phase-shift-full-bridge (ZVS). As part of Infineon's fast body diode portfolio, this new product series blends all advantages of a fast switching technology together with superior hard commutation robustness. The CoolMOS™ CFD7 technology meets highest efficiency and reliability standards and furthermore supports high power density solutions.

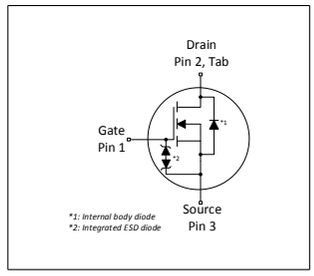

Features

- Ultra-fast body diode
- 650V break down voltage
- Best-in-class $R_{DS(on)}$
- Reduced switching losses
- Low $R_{DS(on)}$ dependency over temperature

Benefits

- Excellent hard commutation ruggedness
- Extra safety margin for designs with increased bus voltage
- Enabling increased power density solutions
- Outstanding light load efficiency in industrial SMPS applications
- Improved full load efficiency in industrial SMPS applications
- Price competitiveness over previous CoolMOS™ families

Potential applications

Suitable for Soft Switching topologies
Optimized for phase-shift full-bridge (ZVS), LLC Applications – Server, Telecom, EV Charging, Solar

Product validation

Fully qualified according to JEDEC for Industrial Applications

Please note: For MOSFET paralleling the use of ferrite beads on the gate or separate totem poles is generally recommended.

Table 1 Key Performance Parameters

Parameter	Value	Unit
V_{DS} @ $T_{j,max}$	700	V
$R_{DS(on),max}$	110	mΩ
$Q_{g,typ}$	41	nC
$I_{D,pulse}$	82	A
E_{oss} @ 400V	5.8	µJ
Body diode di_F/dt	1300	A/µs

Type / Ordering Code	Package	Marking	Related Links
IPP65R110CFD7	PG-TO220-3	65R110F7	see Appendix A

chanhvinh.com

Table of Contents

Description 1
Maximum ratings 3
Thermal characteristics 4
Electrical characteristics 5
Electrical characteristics diagrams 7
Test Circuits 11
Package Outlines 12
Appendix A 13
Revision History 14
Trademarks 14
Disclaimer 14

chanhvinh.com

1 Maximum ratings

at T_j = 25°C, unless otherwise specified

Table 2 Maximum ratings

Parameter	Symbol	Values			Unit	Note / Test Condition
		Min.	Typ.	Max.		
Continuous drain current[1]	I_D	- -	- -	22 14	A	T_C=25°C T_C=100°C
Pulsed drain current[2]	$I_{D,pulse}$	-	-	82	A	T_C=25°C
Avalanche energy, single pulse	E_{AS}	-	-	97	mJ	I_D=4.7A; V_{DD}=50V; see table 10
Avalanche energy, repetitive	E_{AR}	-	-	0.48	mJ	I_D=4.7A; V_{DD}=50V; see table 10
Avalanche current, single pulse	I_{AS}	-	-	4.7	A	-
MOSFET dv/dt ruggedness	dv/dt	-	-	120	V/ns	V_{DS}=0...400V
Gate source voltage (static)	V_{GS}	-20	-	20	V	static;
Gate source voltage (dynamic)	V_{GS}	-30	-	30	V	AC (f>1 Hz)
Power dissipation	P_{tot}	-	-	114	W	T_C=25°C
Storage temperature	T_{stg}	-55	-	150	°C	-
Operating junction temperature	T_j	-55	-	150	°C	-
Mounting torque	-	-	-	60	Ncm	M3 and M3.5 screws
Continuous diode forward current[1]	I_S	-	-	22	A	T_C=25°C
Diode pulse current[2]	$I_{S,pulse}$	-	-	82	A	T_C=25°C
Reverse diode dv/dt[3]	dv/dt	-	-	70	V/ns	V_{DS}=0...400V, I_{SD}<=9.7A, T_j=25°C see table 8
Maximum diode commutation speed	di_F/dt	-	-	1300	A/µs	V_{DS}=0...400V, I_{SD}<=9.7A, T_j=25°C see table 8
Insulation withstand voltage	V_{ISO}	-	-	n.a.	V	V_{rms}, T_C=25°C, t=1min

[1] Limited by $T_{j\,max}$.
[2] Pulse width t_p limited by $T_{j,max}$
[3] Identical low side and high side switch with identical R_G

chanhvinh.com

2 Thermal characteristics

Table 3 Thermal characteristics

Parameter	Symbol	Values			Unit	Note / Test Condition
		Min.	Typ.	Max.		
Thermal resistance, junction - case	R_{thJC}	-	-	1.1	°C/W	-
Thermal resistance, junction - ambient	R_{thJA}	-	-	62	°C/W	leaded
Thermal resistance, junction - ambient for SMD version	R_{thJA}	-	-	-	°C/W	n.a.
Soldering temperature, wavesoldering only allowed at leads	T_{sold}	-	-	260	°C	1.6mm (0.063 in.) from case for 10s

chanhvinh.com

3 Electrical characteristics

at T_j=25°C, unless otherwise specified

Table 4 Static characteristics

Parameter	Symbol	Values			Unit	Note / Test Condition
		Min.	Typ.	Max.		
Drain-source breakdown voltage	$V_{(BR)DSS}$	650	-	-	V	V_{GS}=0V, I_D=1mA
Gate threshold voltage	$V_{(GS)th}$	3.5	4	4.5	V	V_{DS}=V_{GS}, I_D=0.48mA
Zero gate voltage drain current[1]	I_{DSS}	- -	- 8	1 37	µA	V_{DS}=650V, V_{GS}=0V, T_j=25°C V_{DS}=650V, V_{GS}=0V, T_j=125°C
Gate-source leakage current	I_{GSS}	-	-	1000	nA	V_{GS}=20V, V_{DS}=0V
Drain-source on-state resistance	$R_{DS(on)}$	- -	0.087 0.194	0.110 -	Ω	V_{GS}=10V, I_D=9.7A, T_j=25°C V_{GS}=10V, I_D=9.7A, T_j=150°C
Gate resistance	R_G	-	6.0	-	Ω	f=1MHz, open drain

Table 5 Dynamic characteristics

Parameter	Symbol	Values			Unit	Note / Test Condition
		Min.	Typ.	Max.		
Input capacitance	C_{iss}	-	1942	-	pF	V_{GS}=0V, V_{DS}=400V, f=250kHz
Output capacitance	C_{oss}	-	32	-	pF	V_{GS}=0V, V_{DS}=400V, f=250kHz
Effective output capacitance, energy related[2]	$C_{o(er)}$	-	73	-	pF	V_{GS}=0V, V_{DS}=0...400V
Effective output capacitance, time related[3]	$C_{o(tr)}$	-	751	-	pF	I_D=constant, V_{GS}=0V, V_{DS}=0...400V
Turn-on delay time	$t_{d(on)}$	-	17	-	ns	V_{DD}=400V, V_{GS}=13V, I_D=9.7A, R_G=1.8Ω; see table 9
Rise time	t_r	-	9	-	ns	V_{DD}=400V, V_{GS}=13V, I_D=9.7A, R_G=1.8Ω; see table 9
Turn-off delay time	$t_{d(off)}$	-	71	-	ns	V_{DD}=400V, V_{GS}=13V, I_D=9.7A, R_G=1.8Ω; see table 9
Fall time	t_f	-	5	-	ns	V_{DD}=400V, V_{GS}=13V, I_D=9.7A, R_G=1.8Ω; see table 9

Table 6 Gate charge characteristics

Parameter	Symbol	Values			Unit	Note / Test Condition
		Min.	Typ.	Max.		
Gate to source charge	Q_{gs}	-	11	-	nC	V_{DD}=400V, I_D=9.7A, V_{GS}=0 to 10V
Gate to drain charge	Q_{gd}	-	13	-	nC	V_{DD}=400V, I_D=9.7A, V_{GS}=0 to 10V
Gate charge total	Q_g	-	41	-	nC	V_{DD}=400V, I_D=9.7A, V_{GS}=0 to 10V
Gate plateau voltage	$V_{plateau}$	-	5.7	-	V	V_{DD}=400V, I_D=9.7A, V_{GS}=0 to 10V

[1] Maximum specification is defined by calculated six sigma upper confidence bound
[2] $C_{o(er)}$ is a fixed capacitance that gives the same stored energy as C_{oss} while V_{DS} is rising from 0 to 400V
[3] $C_{o(tr)}$ is a fixed capacitance that gives the same charging time as C_{oss} while V_{DS} is rising from 0 to 400V

chanhvinh.com

Table 7 Reverse diode characteristics

Parameter	Symbol	Values			Unit	Note / Test Condition
		Min.	Typ.	Max.		
Diode forward voltage	V_{SD}	-	1.0	-	V	V_{GS}=0V, I_F=9.7A, T_j=25°C
Reverse recovery time	t_{rr}	-	110	165	ns	V_R=400V, I_F=9.7A, di_F/dt=100A/µs; see table 8
Reverse recovery charge	Q_{rr}	-	0.56	1.12	µC	V_R=400V, I_F=9.7A, di_F/dt=100A/µs; see table 8
Peak reverse recovery current	I_{rrm}	-	8.7	-	A	V_R=400V, I_F=9.7A, di_F/dt=100A/µs; see table 8

chanhvinh.com

4 Electrical characteristics diagrams

Diagram 1: Power dissipation

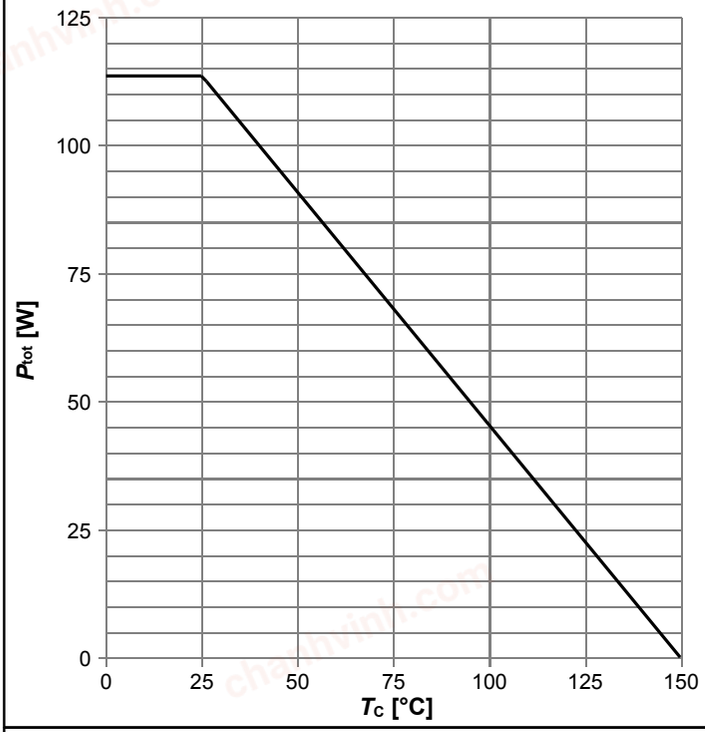

$P_{tot}=f(T_C)$

Diagram 2: Safe operating area

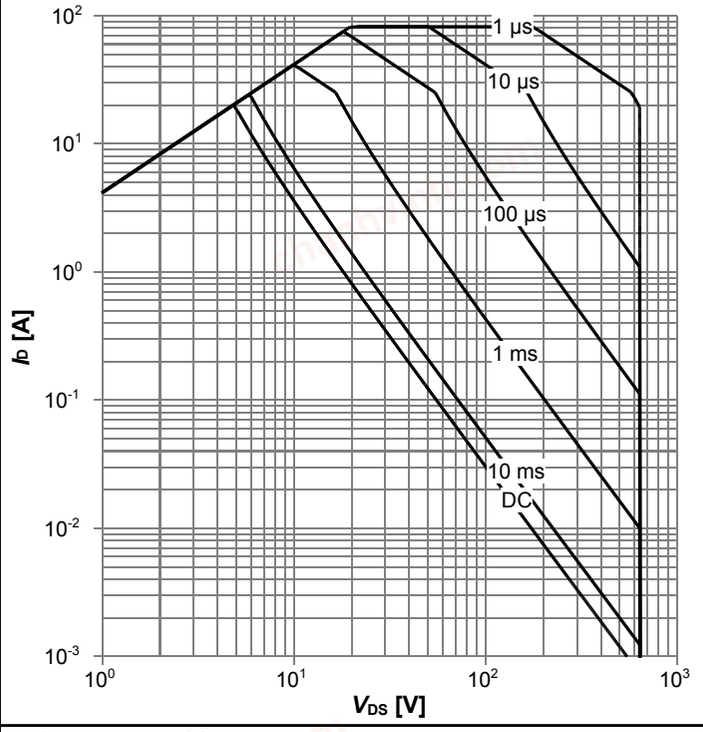

$I_D=f(V_{DS})$; $T_C=25$ °C; $D=0$; parameter: t_p

Diagram 3: Safe operating area

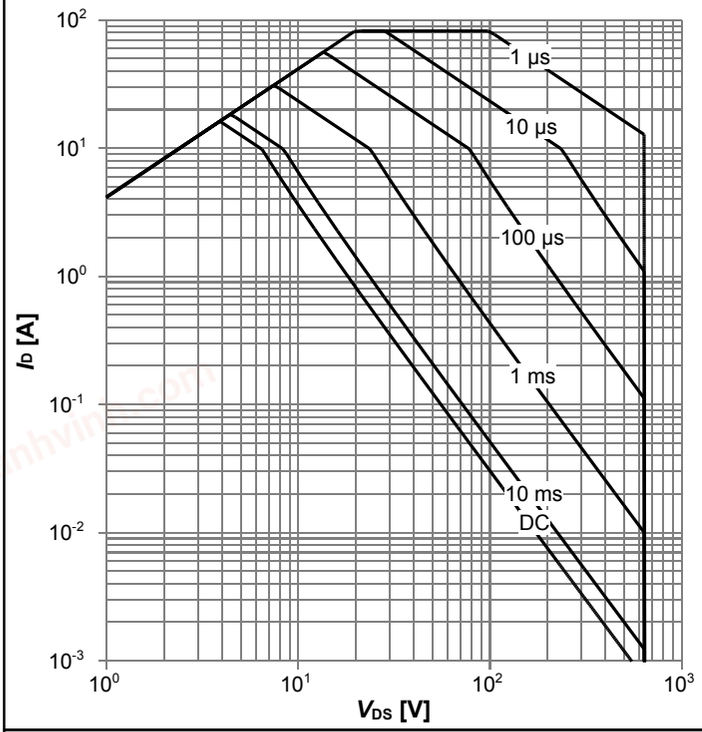

$I_D=f(V_{DS})$; $T_C=80$ °C; $D=0$; parameter: t_p

Diagram 4: Max. transient thermal impedance

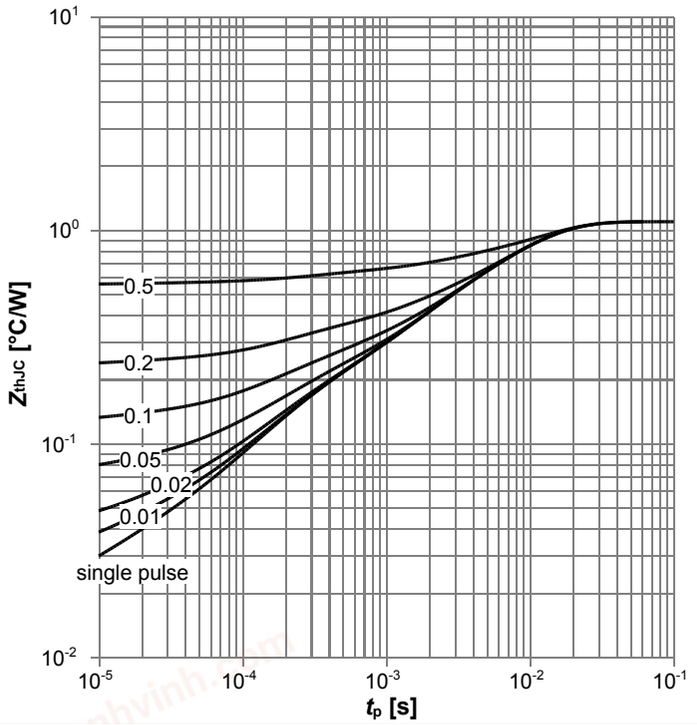

$Z_{thJC}=f(t_P)$; parameter: $D=t_p/T$

chanhvinh.com

Diagram 5: Typ. output characteristics

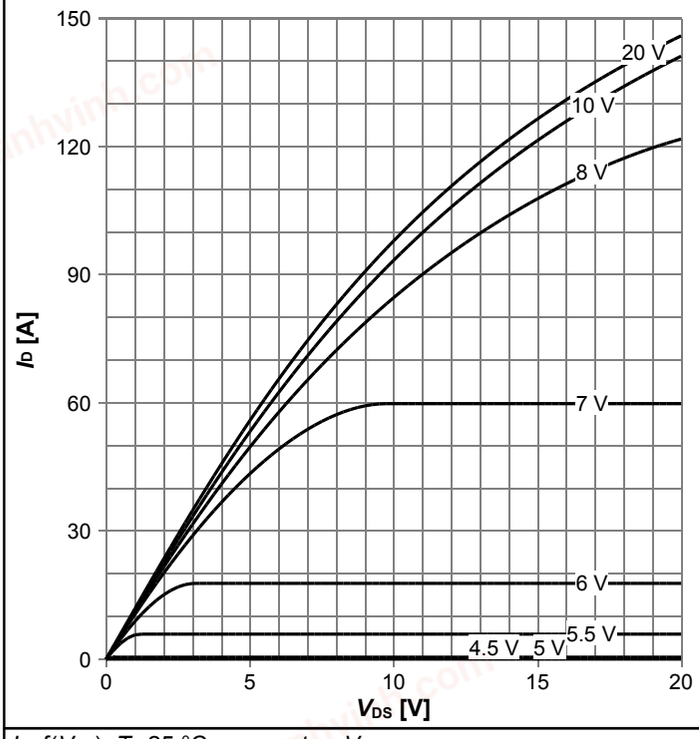

$I_D=f(V_{DS})$; $T_j=25$ °C; parameter: V_{GS}

Diagram 6: Typ. output characteristics

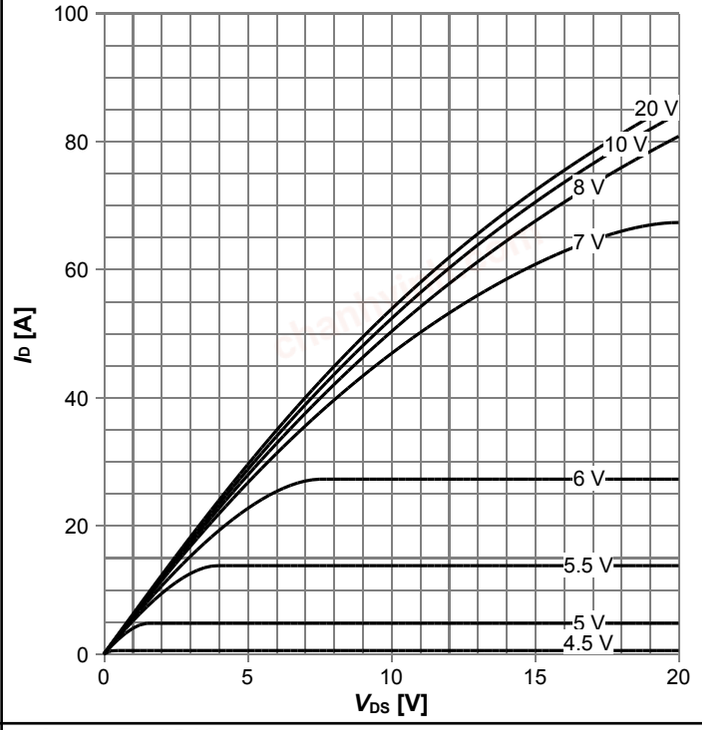

$I_D=f(V_{DS})$; $T_j=125$ °C; parameter: V_{GS}

Diagram 7: Typ. drain-source on-state resistance

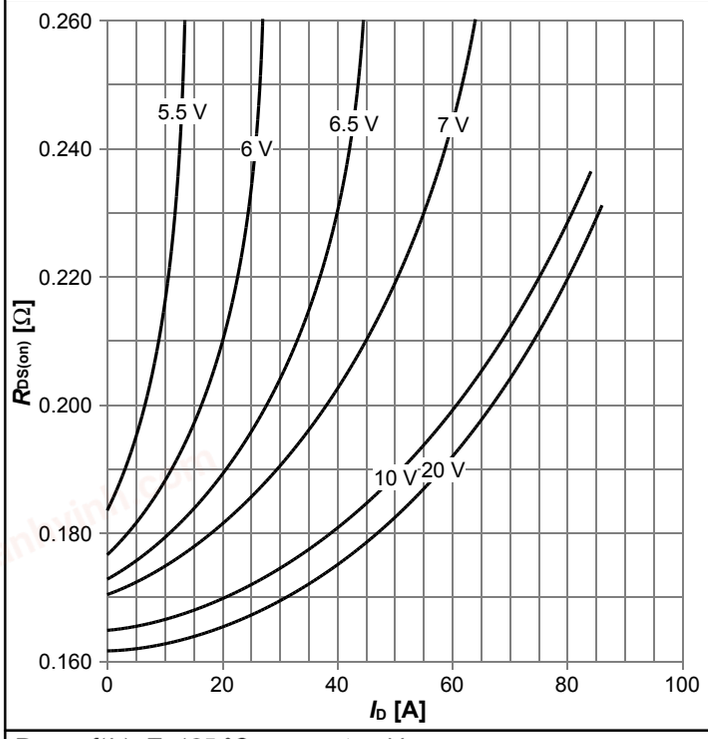

$R_{DS(on)}=f(I_D)$; $T_j=125$ °C; parameter: V_{GS}

Diagram 8: Drain-source on-state resistance

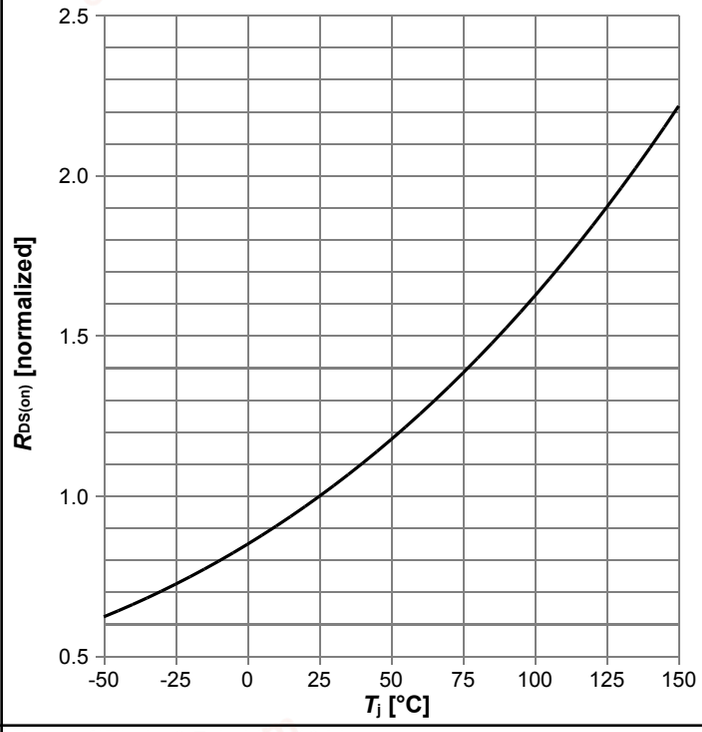

$R_{DS(on)}=f(T_j)$; $I_D=9.7$ A; $V_{GS}=10$ V

chanhvinh.com

Diagram 9: Typ. transfer characteristics

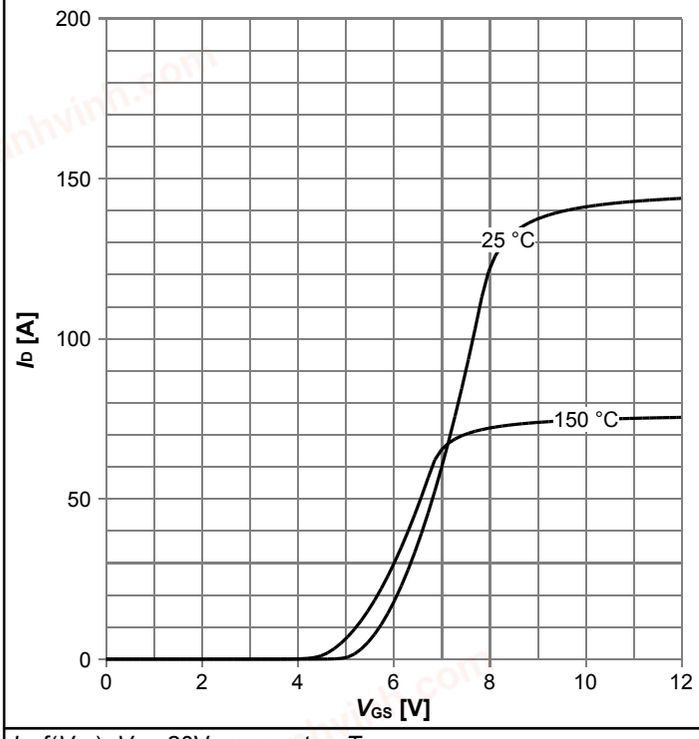

$I_D=f(V_{GS})$; $V_{DS}=20V$; parameter: T_j

Diagram 10: Typ. gate charge

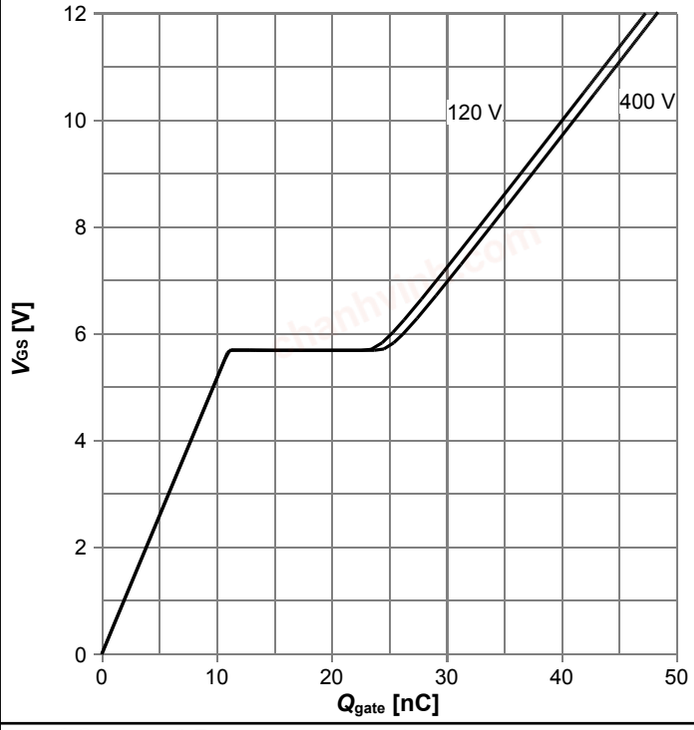

$V_{GS}=f(Q_{gate})$; $I_D=9.7$ A pulsed; parameter: V_{DD}

Diagram 11: Forward characteristics of reverse diode

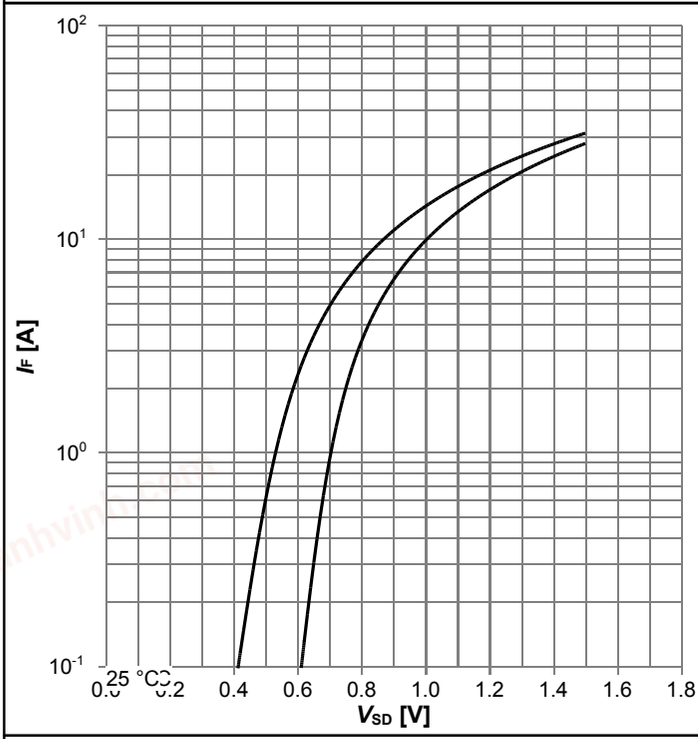

$I_F=f(V_{SD})$; parameter: T_j

Diagram 12: Avalanche energy

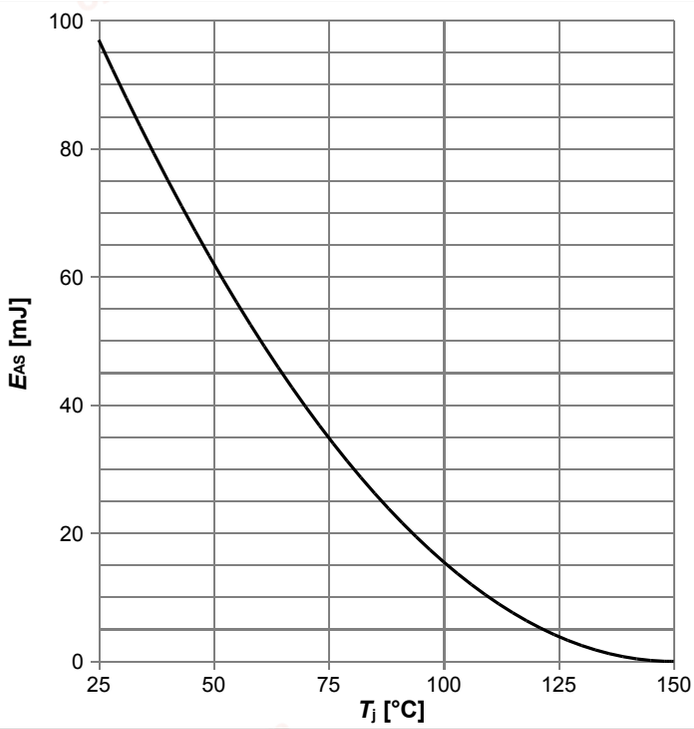

$E_{AS}=f(T_j)$; $I_D=4.7$ A; $V_{DD}=50$ V

chanhvinh.com

Diagram 13: Drain-source breakdown voltage

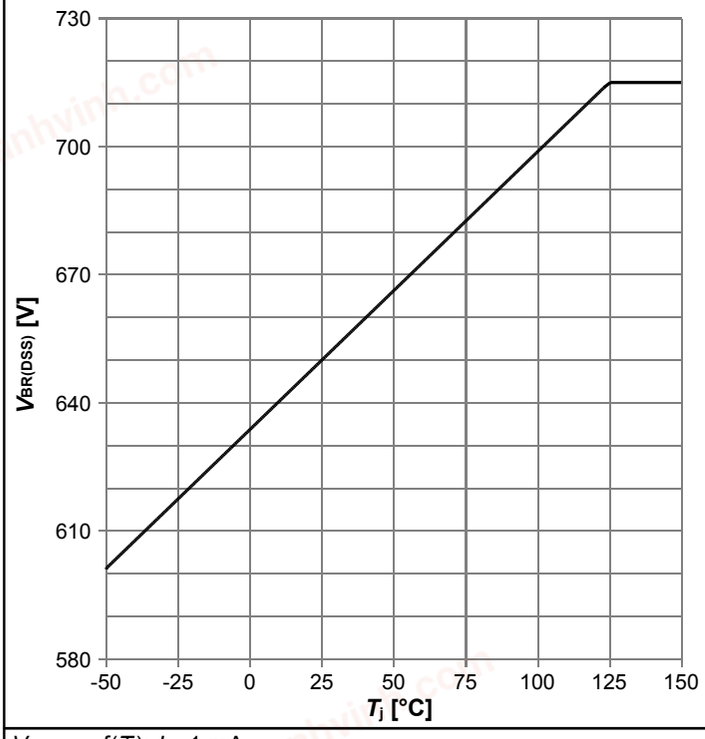

$V_{BR(DSS)}$=f(T_j); I_D=1 mA

Diagram 14: Typ. capacitances

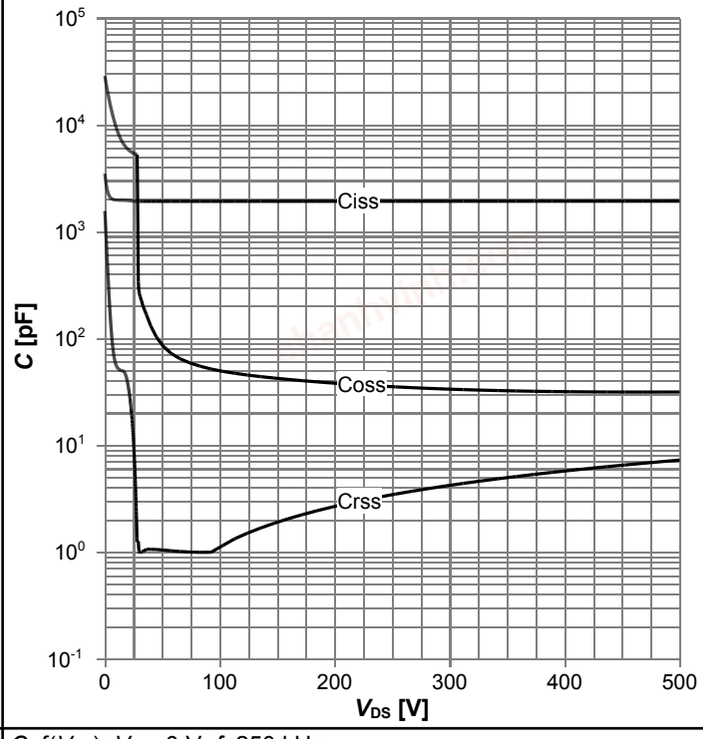

C=f(V_{DS}); V_{GS}=0 V; f=250 kHz

Diagram 15: Typ. Coss stored energy

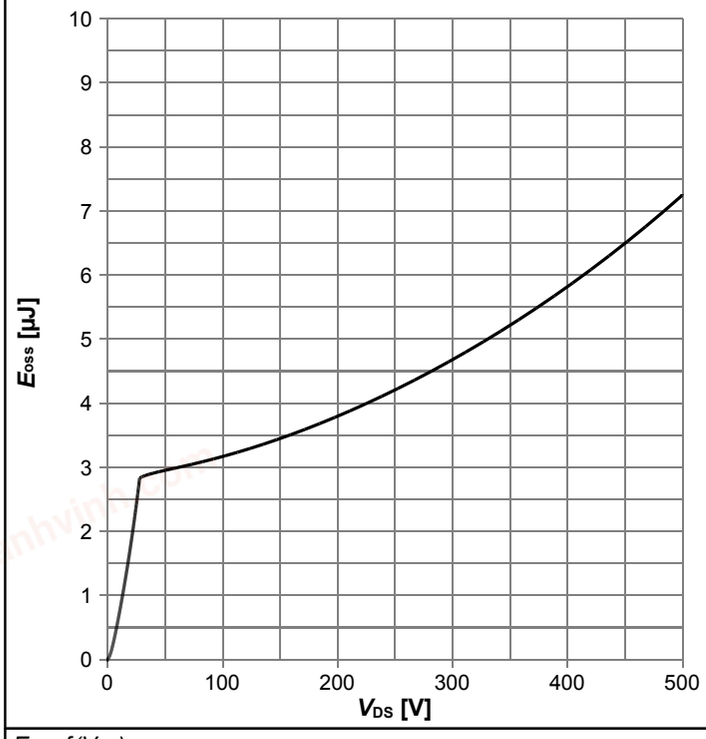

E_{oss}=f(V_{DS})

chanhvinh.com

5 Test Circuits

Table 8 Diode characteristics

Test circuit for diode characteristics	Diode recovery waveform
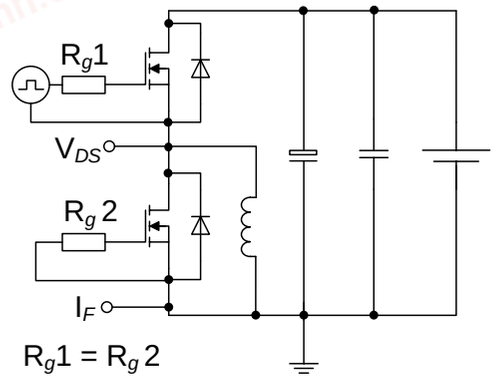	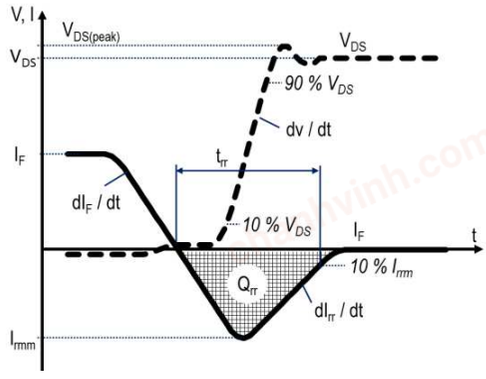

Table 9 Switching times

Switching times test circuit for inductive load	Switching times waveform
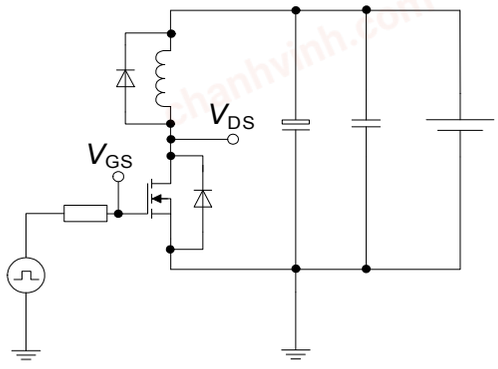	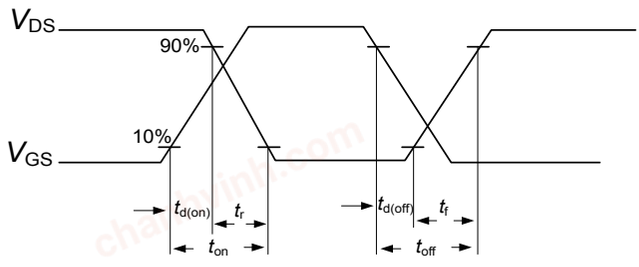

Table 10 Unclamped inductive load

Unclamped inductive load test circuit	Unclamped inductive waveform
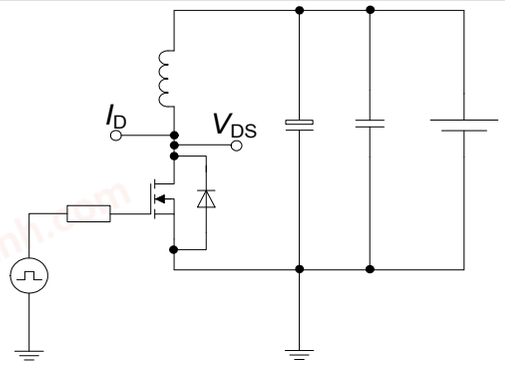	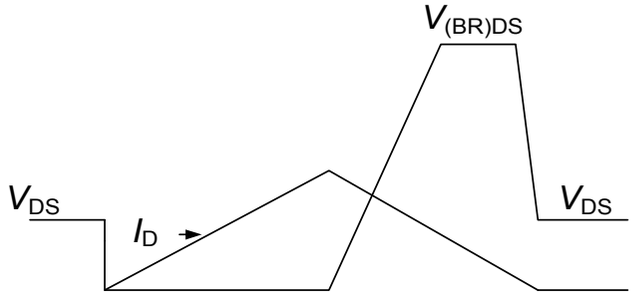

chanhvinh.com

6 Package Outlines

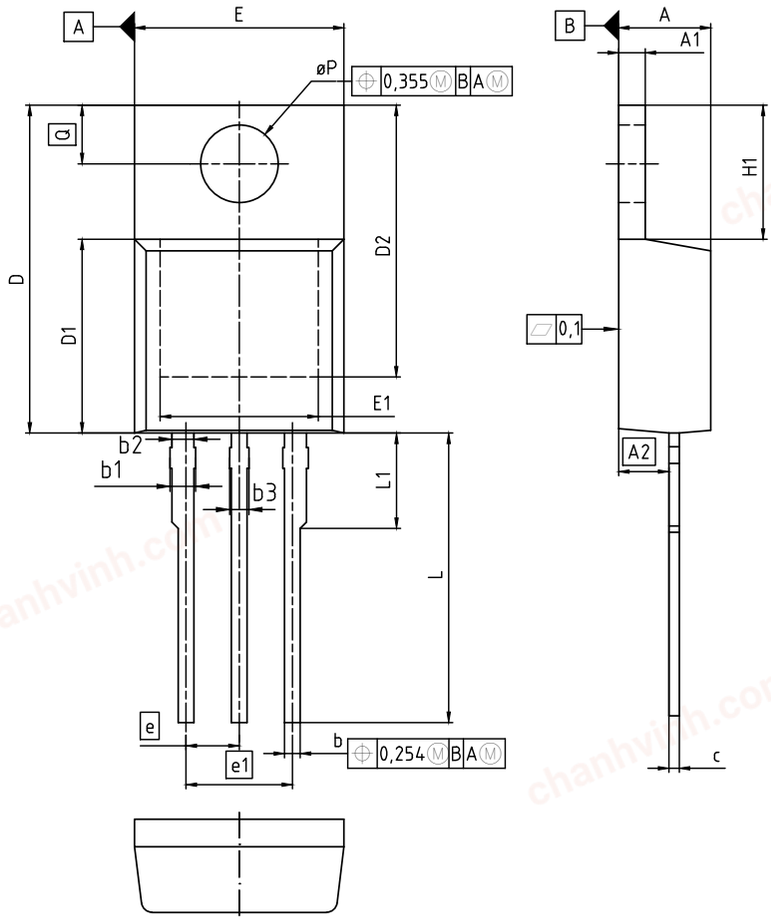

DIM	MILLIMETERS		INCHES	
	MIN	MAX	MIN	MAX
A	4.30	4.57	0.169	0.180
A1	1.17	1.40	0.046	0.055
A2	2.15	2.72	0.085	0.107
b	0.65	0.86	0.026	0.034
b1	0.95	1.40	0.037	0.055
b2	0.95	1.15	0.037	0.045
b3	0.65	1.15	0.026	0.045
c	0.33	0.60	0.013	0.024
D	14.81	15.95	0.583	0.628
D1	8.51	9.45	0.335	0.372
D2	12.19	13.10	0.480	0.516
E	9.70	10.36	0.382	0.408
E1	6.50	8.60	0.256	0.339
e	2.54		0.100	
e1	5.08		0.200	
N	3		3	
H1	5.90	6.90	0.232	0.272
L	13.00	14.00	0.512	0.551
L1	-	4.80	-	0.189
øP	3.60	3.89	0.142	0.153
Q	2.60	3.00	0.102	0.118

DOCUMENT NO.	Z8B00003318
SCALE	0 2.5 0 2.5 5mm
EUROPEAN PROJECTION	
ISSUE DATE	30-07-2009
REVISION	06

Figure 1 Outline PG-TO220-3, dimensions in mm/inches

chanhvinh.com

7 Appendix A

Table 11 Related Links

- **IFX CoolMOS CFD7 650V Webpage:** www.infineon.com
- **IFX CoolMOS CFD7 650V application note:** www.infineon.com
- **IFX CoolMOS CFD7 650V simulation model:** www.infineon.com
- **IFX Design tools:** www.infineon.com

chanhvinh.com

Revision History

IPP65R110CFD7

Revision: 2020-10-30, Rev. 2.0

Previous Revision

Revision	Date	Subjects (major changes since last revision)
2.0	2020-10-30	Release of final version

Trademarks
All referenced product or service names and trademarks are the property of their respective owners.

We Listen to Your Comments
Any information within this document that you feel is wrong, unclear or missing at all? Your feedback will help us to continuously improve the quality of this document. Please send your proposal (including a reference to this document) to:
erratum@infineon.com

Published by
Infineon Technologies AG
81726 München, Germany
© 2020 Infineon Technologies AG
All Rights Reserved.

Legal Disclaimer
The information given in this document shall in no event be regarded as a guarantee of conditions or characteristics (“Beschaffenheitsgarantie”) .

With respect to any examples, hints or any typical values stated herein and/or any information regarding the application of the product, Infineon Technologies hereby disclaims any and all warranties and liabilities of any kind, including without limitation warranties of non-infringement of intellectual property rights of any third party.
In addition, any information given in this document is subject to customer’s compliance with its obligations stated in this document and any applicable legal requirements, norms and standards concerning customer’s products and any use of the product of Infineon Technologies in customer’s applications.
The data contained in this document is exclusively intended for technically trained staff. It is the responsibility of customer’s technical departments to evaluate the suitability of the product for the intended application and the completeness of the product information given in this document with respect to such application.

Information
For further information on technology, delivery terms and conditions and prices please contact your nearest Infineon Technologies Office (www.infineon.com).

Warnings
Due to technical requirements, components may contain dangerous substances. For information on the types in question, please contact the nearest Infineon Technologies Office.
The Infineon Technologies component described in this Data Sheet may be used in life-support devices or systems and/or automotive, aviation and aerospace applications or systems only with the express written approval of Infineon Technologies, if a failure of such components can reasonably be expected to cause the failure of that life-support, automotive, aviation and aerospace device or system or to affect the safety or effectiveness of that device or system. Life support devices or systems are intended to be implanted in the human body or to support and/or maintain and sustain and/or protect human life. If they fail, it is reasonable to assume that the health of the user or other persons may be endangered.