chanhvinh.com

MOSFET

Metal Oxide Semiconductor Field Effect Transistor

CoolMOS™ C6

600V CoolMOS™ C6 Power Transistor
IPx60R099C6

Data Sheet

Rev. 2.2, 2014-12-02
Final

Power Management & Multimarket

chanhvinh.com

1 Description

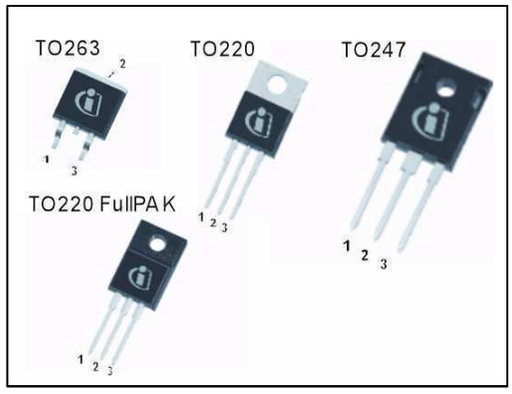

CoolMOS™ is a revolutionary technology for high voltage power MOSFETs, designed according to the superjunction (SJ) principle and pioneered by Infineon Technologies. CoolMOS™ C6 series combines the experience of the leading SJ MOSFET supplier with high class innovation. The offered devices provide all benefits of a fast switching SJ MOSFET while not sacrificing ease of use. Extremely low switching and conduction losses make switching applications even more efficient, more compact, lighter, and cooler.

RoHS

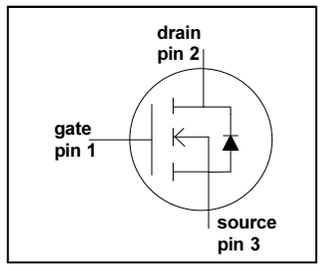

Features

- Extremely low losses due to very low FOM R_{dson}*Q_g and E_{oss}
- Very high commutation ruggedness
- Easy to use/drive
- JEDEC[1)] qualified, Pb-free plating, Halogen free

Applications

PFC stages, hard switching PWM stages and resonant switching PWM stages for e.g. PC Silverbox, Adapter, LCD & PDP TV, Lighting, Server, Telecom and UPS.

Please note: For MOSFET paralleling the use of ferrite beads on the gate or separate totem poles is generally recommended.

Table 1 Key Performance Parameters

Parameter	Value	Unit
V_{DS} @ $T_{j,max}$	650	V
$R_{DS(on),max}$	0.099	Ω
$Q_{g,typ}$	119	nC
$I_{D,pulse}$	112	A
E_{oss} @ 400V	9.3	µJ
Body diode di/dt	300	A/µs

Type / Ordering Code	Package	Marking	Related Links
IPW60R099C6	PG-TO247	6R099C6	IFX C6 Product Brief
IPB60R099C6	PG-TO263		IFX C6 Portfolio
IPP60R099C6	PG-TO220		IFX CoolMOS Webpage
IPA60R099C6	PG-TO220 FullPAK		IFX Design tools

1) J-STD20 and JESD22

chanhvinh.com

Table of Contents

1	Description	2
	Table of Contents	3
2	Maximum ratings	4
3	Thermal characteristics	5
4	Electrical characteristics	6
5	Electrical characteristics diagrams	8
6	Test circuits	13
7	Package outlines	14
8	Revision History	18

chanhvinh.com

2 Maximum ratings

at T_j = 25 °C, unless otherwise specified.

Table 2 Maximum ratings

Parameter	Symbol	Values			Unit	Note / Test Condition
		Min.	Typ.	Max.		
Continuous drain current[1]	I_D	-	-	37.9	A	T_C= 25 °C
				24		T_C= 100°C
Pulsed drain current[2]	$I_{D,pulse}$	-	-	112	A	T_C=25 °C
Avalanche energy, single pulse	E_{AS}	-	-	796	mJ	I_D=6.6 A, V_{DD}=50 V (see table 21)
Avalanche energy, repetitive	E_{AR}	-	-	1.2		I_D=6.6 A, V_{DD}=50 V
Avalanche current, repetitive	I_{AR}	-	-	6.6	A	
MOSFET dv/dt ruggedness	dv/dt	-	-	50	V/ns	V_{DS}=0...480 V
Gate source voltage	V_{GS}	-20	-	20	V	static
		-30		30		AC (f>1 Hz)
Power dissipation for TO-220, TO-247, TO-263	P_{tot}	-	-	278	W	T_C=25 °C
Power dissipation for TO-220 FullPAK	P_{tot}	-	-	35		
Operating and storage temperature	T_j, T_{stg}	-55	-	150	°C	
Mounting torque TO-220, TO-247		-	-	60	Ncm	M3 and M3.5 screws
Mounting torque TO-220 FullPAK				50		M2.5 screws
Continuous diode forward current	I_S	-	-	33	A	T_C=25 °C
Diode pulse current[2]	$I_{S,pulse}$	-	-	112	A	T_C=25 °C
Reverse diode dv/dt[3]	dv/dt	-	-	15	V/ns	V_{DS}=0...400 V, $I_{SD} \leq I_D$, T_j=25 °C
Maximum diode commutation speed[3]	di_f/dt			300	A/µs	(see table 22)

1) Limited by $T_{j,max.}$ Maximum duty cycle D=0.75
2) Pulse width t_p limited by $T_{j,max}$
3) Identical low side and high side switch with identical R_G

chanhvinh.com

3 Thermal characteristics

Table 3 Thermal characteristics TO-220 (IPP60R099C6),TO-247 (IPW60R099C6)

Parameter	Symbol	Values			Unit	Note / Test Condition
		Min.	Typ.	Max.		
Thermal resistance, junction - case	R_{thJC}	-	-	0.45	°C/W	
Thermal resistance, junction - ambient	R_{thJA}	-	-	62		leaded
Soldering temperature, wavesoldering only allowed at leads	T_{sold}	-	-	260	°C	1.6 mm (0.063 in.) from case for 10 s

Table 4 Thermal characteristics TO-220FullPAK (IPA60R099C6)

Parameter	Symbol	Values			Unit	Note / Test Condition
		Min.	Typ.	Max.		
Thermal resistance, junction - case	R_{thJC}	-	-	3.6	°C/W	
Thermal resistance, junction - ambient	R_{thJA}	-	-	80		leaded
Soldering temperature, wavesoldering only allowed at leads	T_{sold}	-	-	260	°C	1.6 mm (0.063 in.) from case for 10 s

Table 5 Thermal characteristics TO-263 (IPB60R099C6)

Parameter	Symbol	Values			Unit	Note / Test Condition
		Min.	Typ.	Max.		
Thermal resistance, junction - case	R_{thJC}	-	-	0.45	°C/W	
Thermal resistance, junction - ambient	R_{thJA}	-	-	62		SMD version, device on PCB, minimal footprint
		-	35	-		SMD version, device on PCB, 6cm^2 cooling area[1)]
Soldering temperature, wave- & reflow soldering allowed	T_{sold}	-	-	260	°C	reflow MSL1

1) Device on 40mm*40mm*1.5mm one layer epoxy PCB FR4 with 6cm^2 copper area (thickness 70µm) for drain connection. PCB is vertical without air stream cooling.

chanhvinh.com

4 Electrical characteristics

Electrical characteristics, at T_j=25 °C, unless otherwise specified.

Table 6 Static characteristics

Parameter	Symbol	Values			Unit	Note / Test Condition
		Min.	Typ.	Max.		
Drain-source breakdown voltage	$V_{(BR)DSS}$	600	-	-	V	V_{GS}=0 V, I_D=0.25 mA
Gate threshold voltage	$V_{GS(th)}$	2.5	3	3.5		V_{DS}=V_{GS}, I_D=1.21 mA
Zero gate voltage drain current	I_{DSS}	-	-	5	µA	V_{DS}=600 V, V_{GS}=0 V, T_j=25 °C
		-	50	-		V_{DS}=600 V, V_{GS}=0 V, T_j=150 °C
Gate-source leakage current	I_{GSS}	-	-	100	nA	V_{GS}=20 V, V_{DS}=0 V
Drain-source on-state resistance	$R_{DS(on)}$	-	0.09	0.099	Ω	V_{GS}=10 V, I_D=18.1 A, T_j=25 °C
		-	0.23	-		V_{GS}=10 V, I_D=18.1 A, T_j=150 °C
Gate resistance	R_G	-	1.6	-	Ω	f=1 MHz, open drain

Table 7 Dynamic characteristics

Parameter	Symbol	Values			Unit	Note / Test Condition
		Min.	Typ.	Max.		
Input capacitance	C_{iss}	-	2660	-	pF	V_{GS}=0 V, V_{DS}=100 V, f=1 MHz
Output capacitance	C_{oss}	-	154	-		
Effective output capacitance, energy related[1)]	$C_{o(er)}$	-	100	-		V_{GS}=0 V, V_{DS}=0...480 V
Effective output capacitance, time related[2)]	$C_{o(tr)}$	-	500	-		I_D=constant, V_{GS}=0 V V_{DS}=0...480V
Turn-on delay time	$t_{d(on)}$	-	15	-	ns	V_{DD}=400 V, V_{GS}=13 V, I_D=18.1A, R_G= 1.7Ω (see table 20)
Rise time	t_r	-	12	-		
Turn-off delay time	$t_{d(off)}$	-	75	-		
Fall time	t_f	-	6	-		

1) $C_{o(er)}$ is a fixed capacitance that gives the same stored energy as C_{oss} while V_{DS} is rising from 0 to 80% $V_{(BR)DSS}$

2) $C_{o(tr)}$ is a fixed capacitance that gives the same charging time as C_{oss} while V_{DS} is rising from 0 to 80% $V_{(BR)DSS}$

chanhvinh.com

Table 8 Gate charge characteristics

Parameter	Symbol	Values			Unit	Note / Test Condition
		Min.	Typ.	Max.		
Gate to source charge	Q_{gs}	-	14	-	nC	V_{DD}=480 V, I_D=18.1 A, V_{GS}=0 to 10 V
Gate to drain charge	Q_{gd}	-	61	-		
Gate charge total	Q_g	-	119	-		
Gate plateau voltage	$V_{plateau}$	-	5.4	-	V	

Table 9 Reverse diode characteristics

Parameter	Symbol	Values			Unit	Note / Test Condition
		Min.	Typ.	Max.		
Diode forward voltage	V_{SD}	-	0.9	-	V	V_{GS}=0 V, I_F=18.1 A, T_j=25 °C
Reverse recovery time	t_{rr}	-	580	-	ns	V_R=400 V, I_F=18.1 A, di_F/dt=100 A/µs (see table 22)
Reverse recovery charge	Q_{rr}	-	13	-	µC	
Peak reverse recovery current	I_{rrm}	-	43	-	A	

chanhvinh.com

5 Electrical characteristics diagrams

Table 10

Power dissipation TO-220, TO-247, TO-263	Power dissipation TO-220 FullPAK
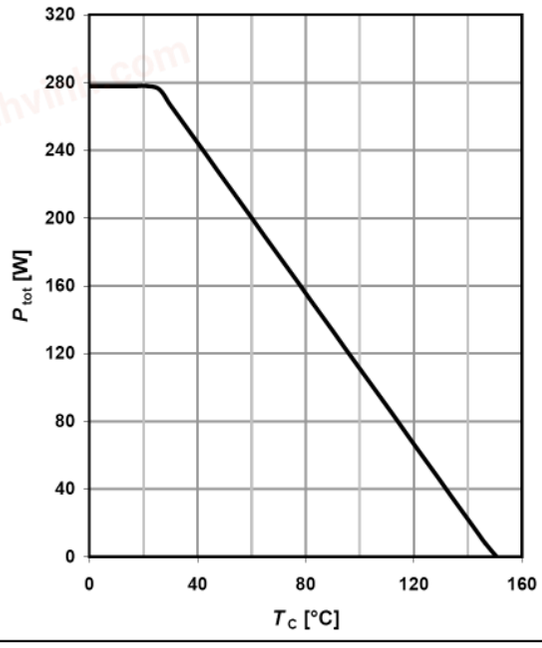	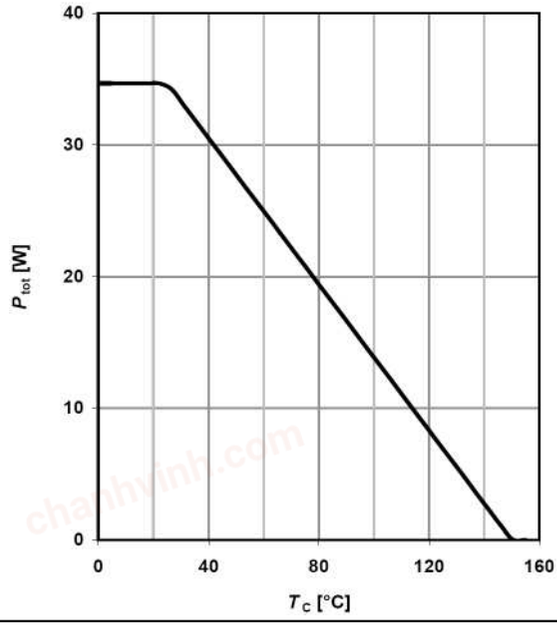
$P_{tot} = f(T_C)$	$P_{tot} = f(T_C)$

Table 11

Max. transient thermal impedance TO-220, TO-247, TO-263	Max. transient thermal impedance TO-220 FullPAK
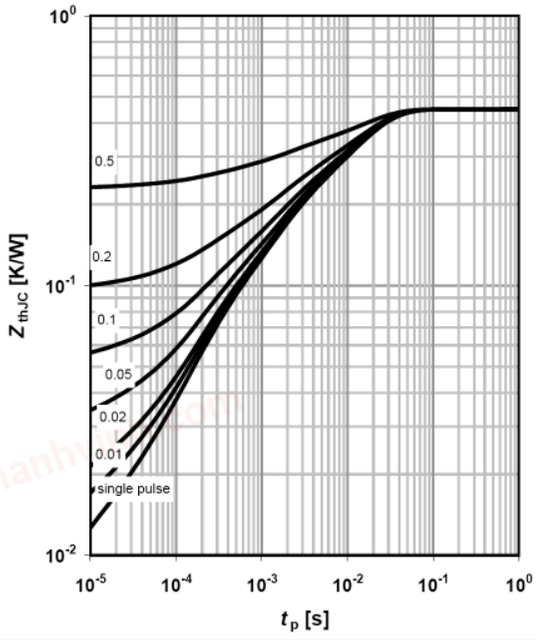	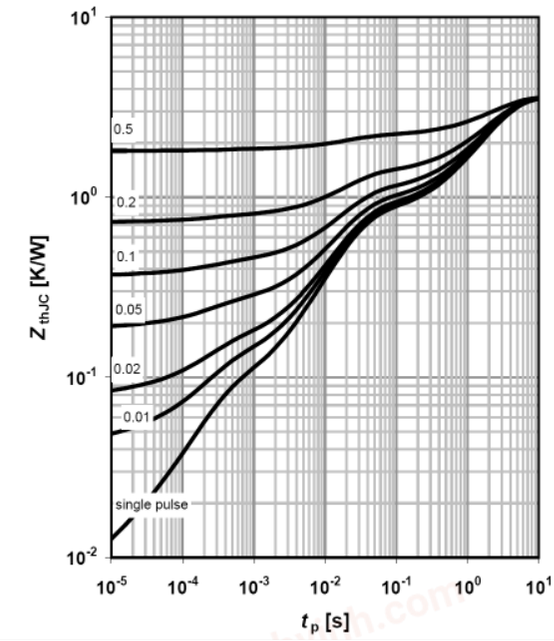
$Z_{(thJC)}$=f(tp); parameter: D=t_p/T	$Z_{(thJC)}$=f(tp); parameter: D=t_p/T

chanhvinh.com

Table 12

Safe operating area T_C=25 °C TO-220, TO-247, TO-263	**Safe operating area T_C=25 °C TO-220 FullPAK**
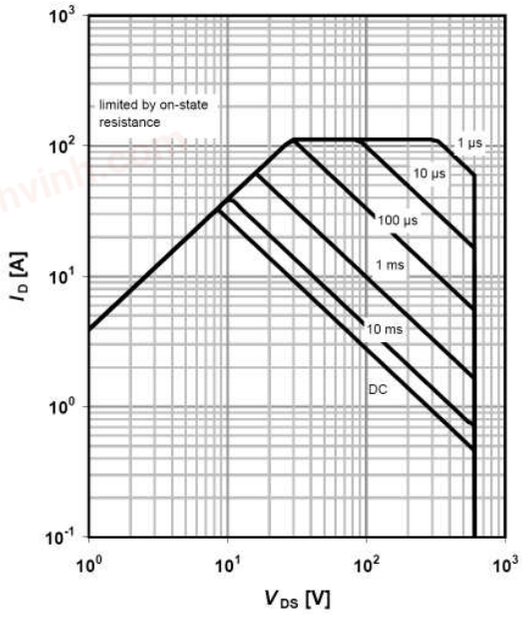	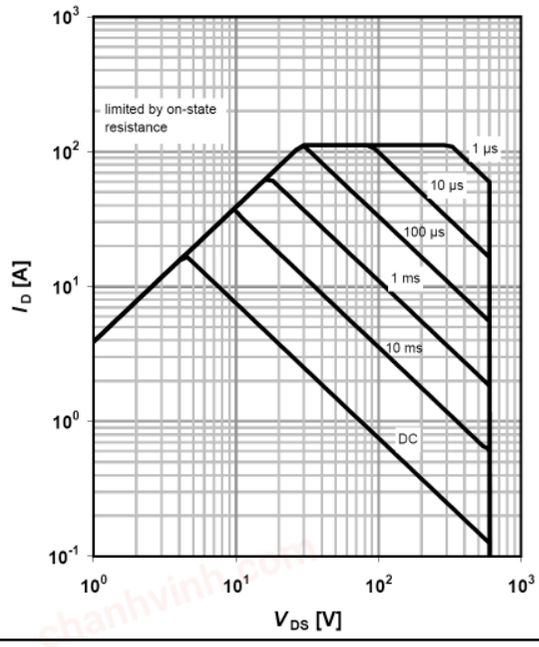
I_D=f(V_{DS}); T_C=25 °C; D=0; parameter t_p	I_D=f(V_{DS}); T_C=25 °C; D=0; parameter t_p

Table 13

Safe operating area T_C=80 °C TO-220, TO-247, TO-263	**Safe operating area T_C=80 °C TO-220 FullPAK**
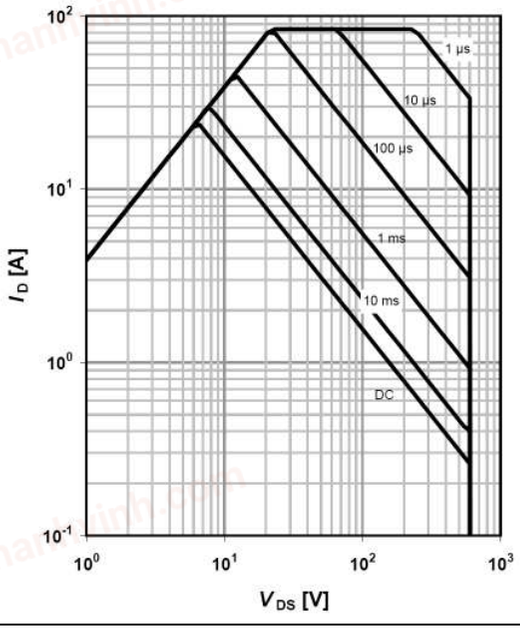	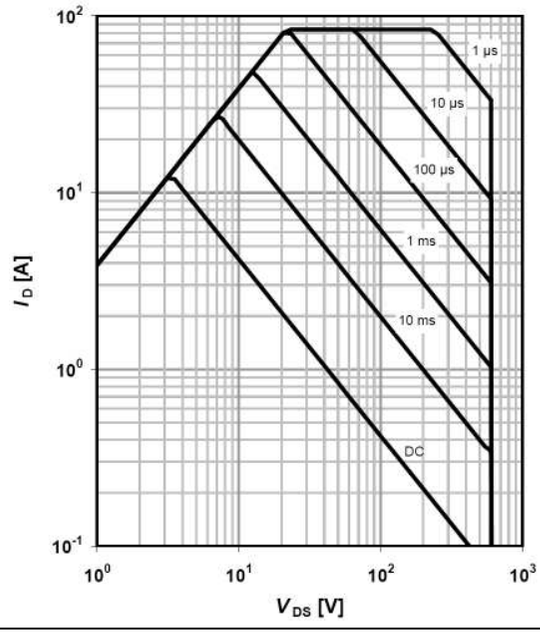
I_D=f(V_{DS}); T_C=80 °C; D=0; parameter t_p	I_D=f(V_{DS}); T_C=80 °C; D=0; parameter t_p

chanhvinh.com

Table 14

Typ. output characteristics T_j=25 °C	Typ. output characteristics T_j=125 °C
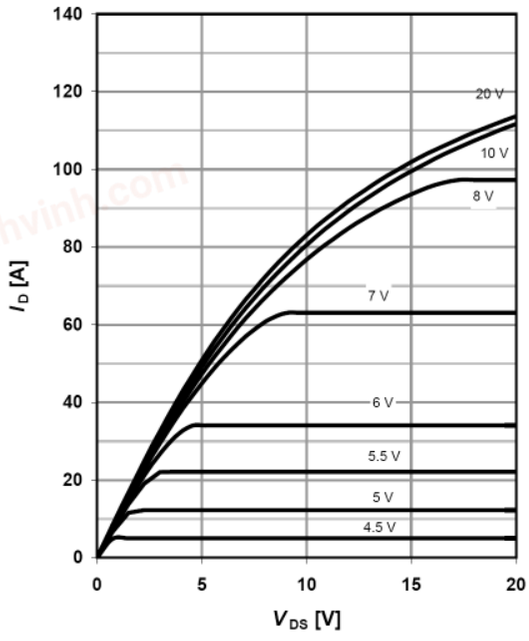	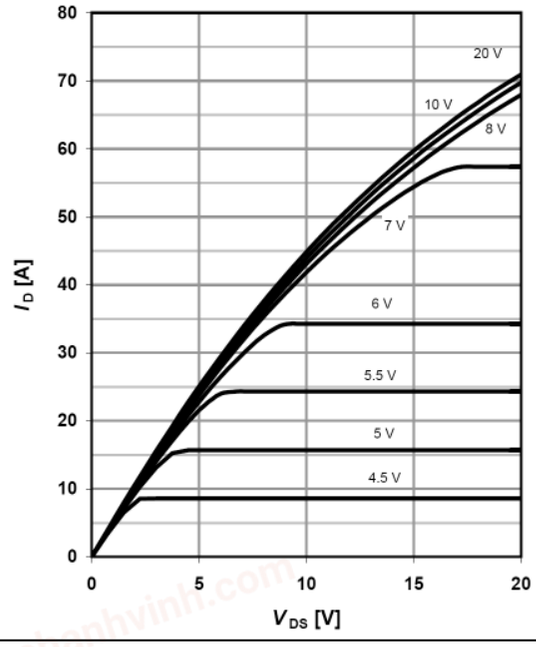
I_D=f(V_{DS}); T_j=25 °C; parameter: V_{GS}	I_D=f(V_{DS}); T_j=125 °C; parameter: V_{GS}

Table 15

Typ. drain-source on-state resistance	Drain-source on-state resistance
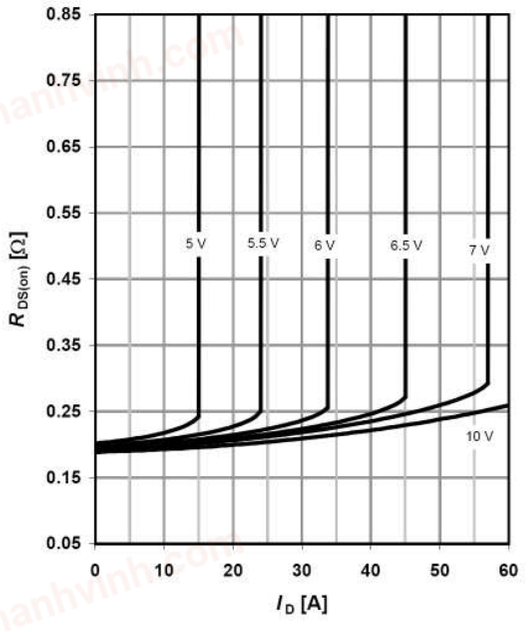	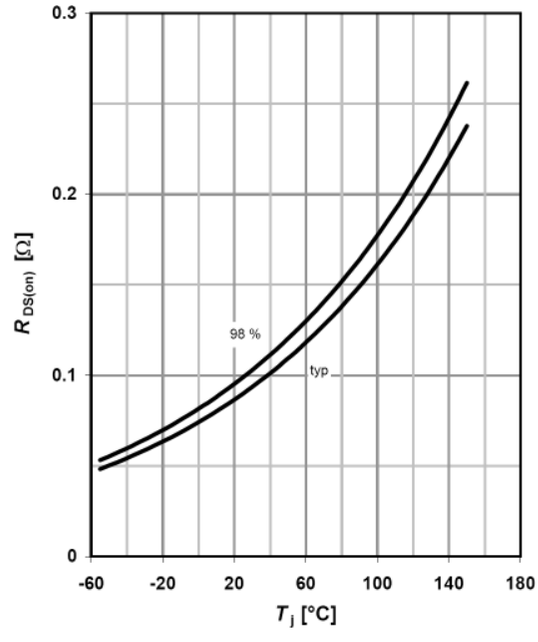
$R_{DS(on)}$=f(I_D); T_j=125 °C; parameter: V_{GS}	$R_{DS(on)}$=f(T_j); I_D=18.1 A; V_{GS}=10 V

chanhvinh.com

Table 16

Typ. transfer characteristics	Typ. gate charge
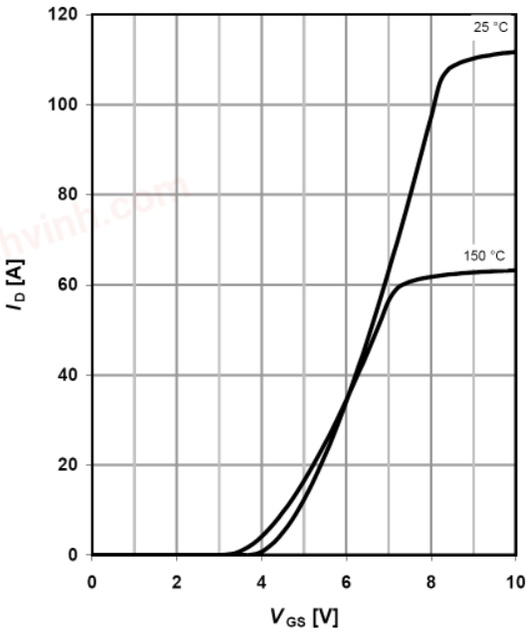	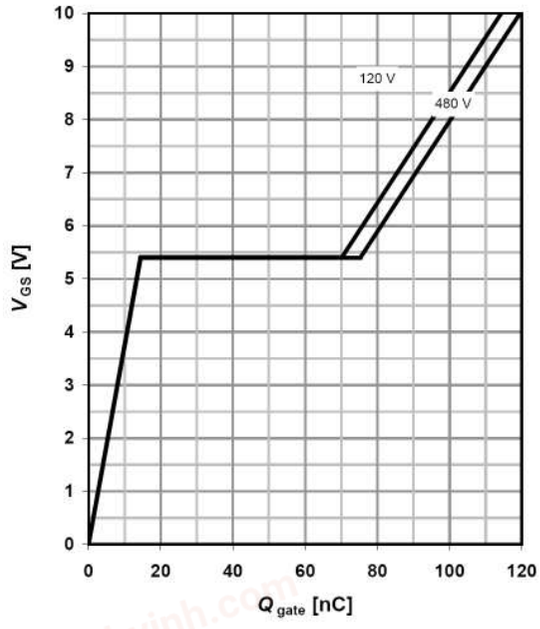
I_D=f(V_{GS}); V_{DS}=20V	V_{GS}=f(Q_{gate}), I_D=18.1 A pulsed

Table 17

Avalanche energy	Drain-source breakdown voltage
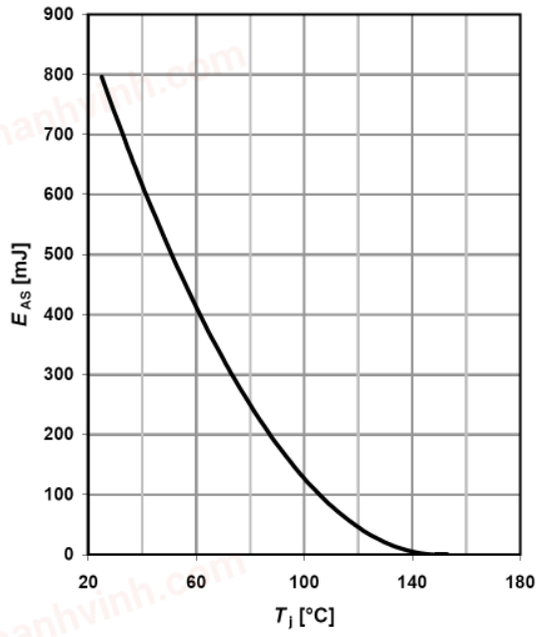	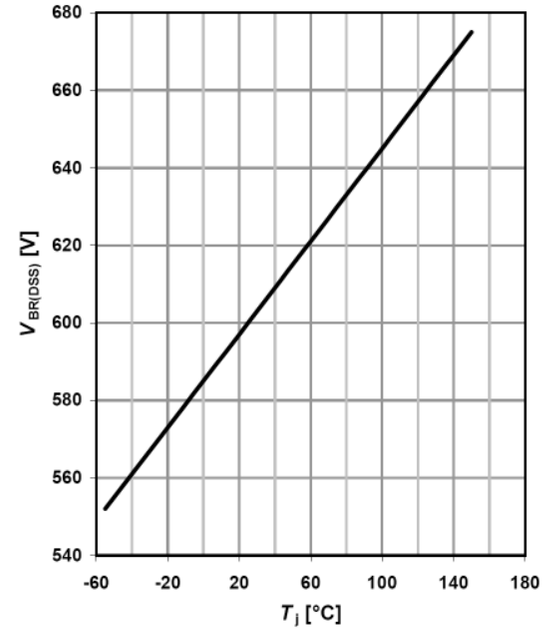
E_{AS}=f(T_j); I_D=6.6 A; V_{DD}=50 V	$V_{BR(DSS)}$=f(T_j); I_D=0.25 mA

chanhvinh.com

Table 18

Typ. capacitances	Typ. C_{oss} stored energy
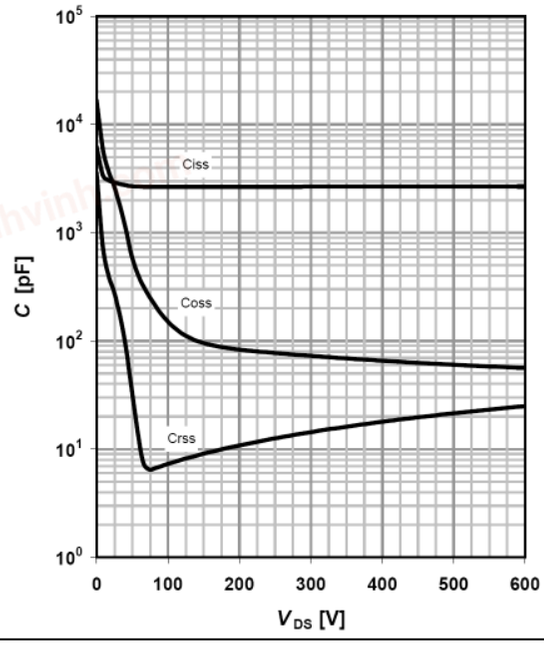	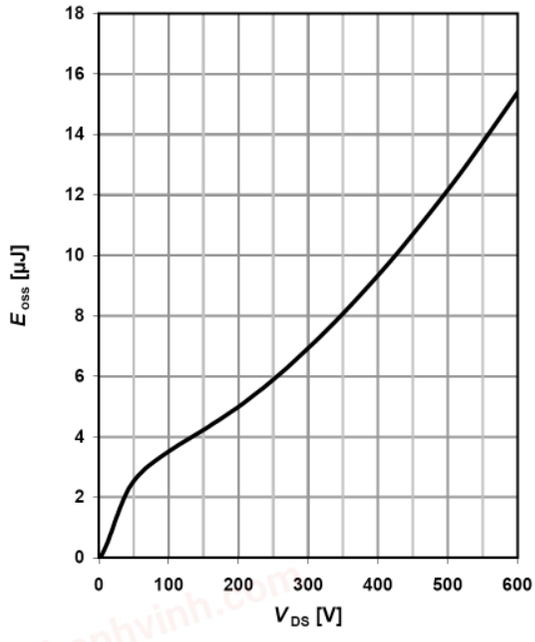
C=f(V_{DS}); V_{GS}=0 V; f=1 MHz	E_{oss}=f(V_{DS})

Table 19

Forward characteristics of reverse diode
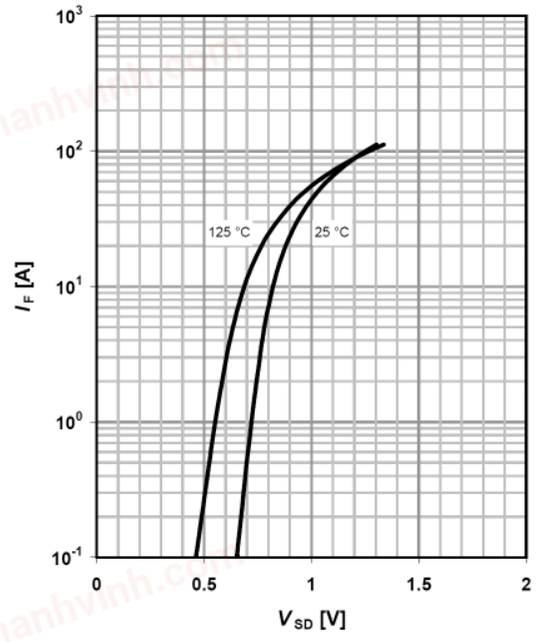
I_F=f(V_{SD}); parameter: T_j

chanhvinh.com

6 Test circuits

Table 20 Switching times test circuit and waveform for inductive load

Switching times test circuit for inductive load	Switching time waveform
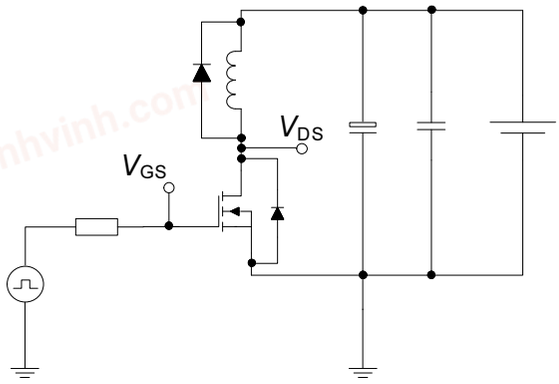	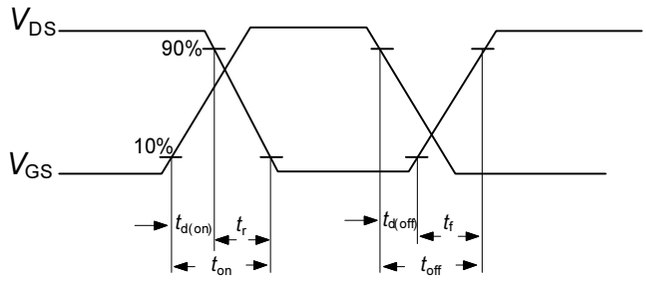

Table 21 Unclamped inductive load test circuit and waveform

Unclamped inductive load test circuit	Unclamped inductive waveform
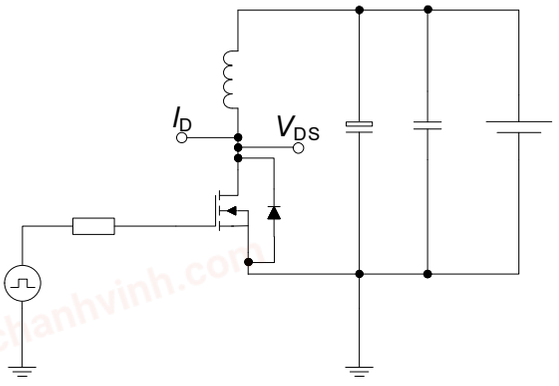	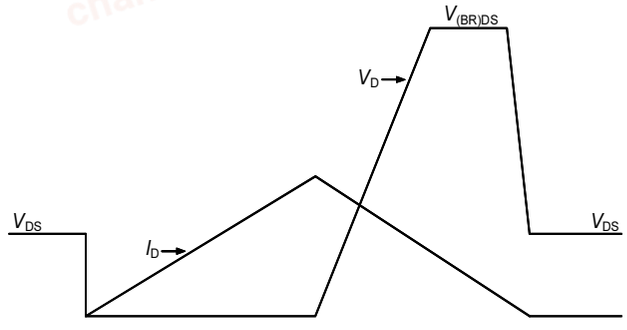

Table 22 Test circuit and waveform for diode characteristics

Test circuit for diode characteristics	Diode recovery waveform
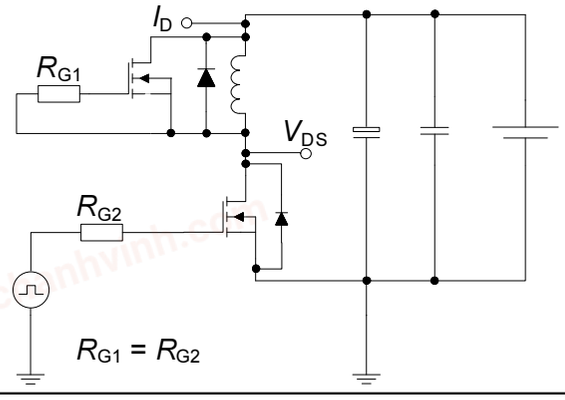	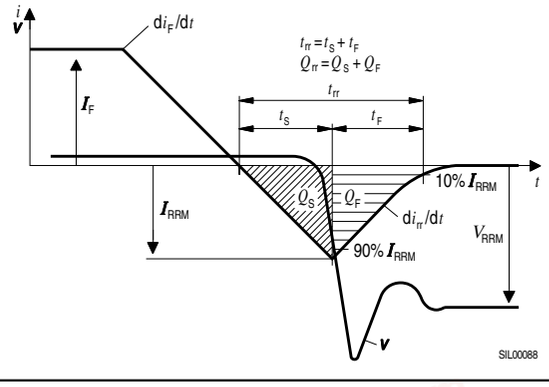

chanhvinh.com

7 Package outlines

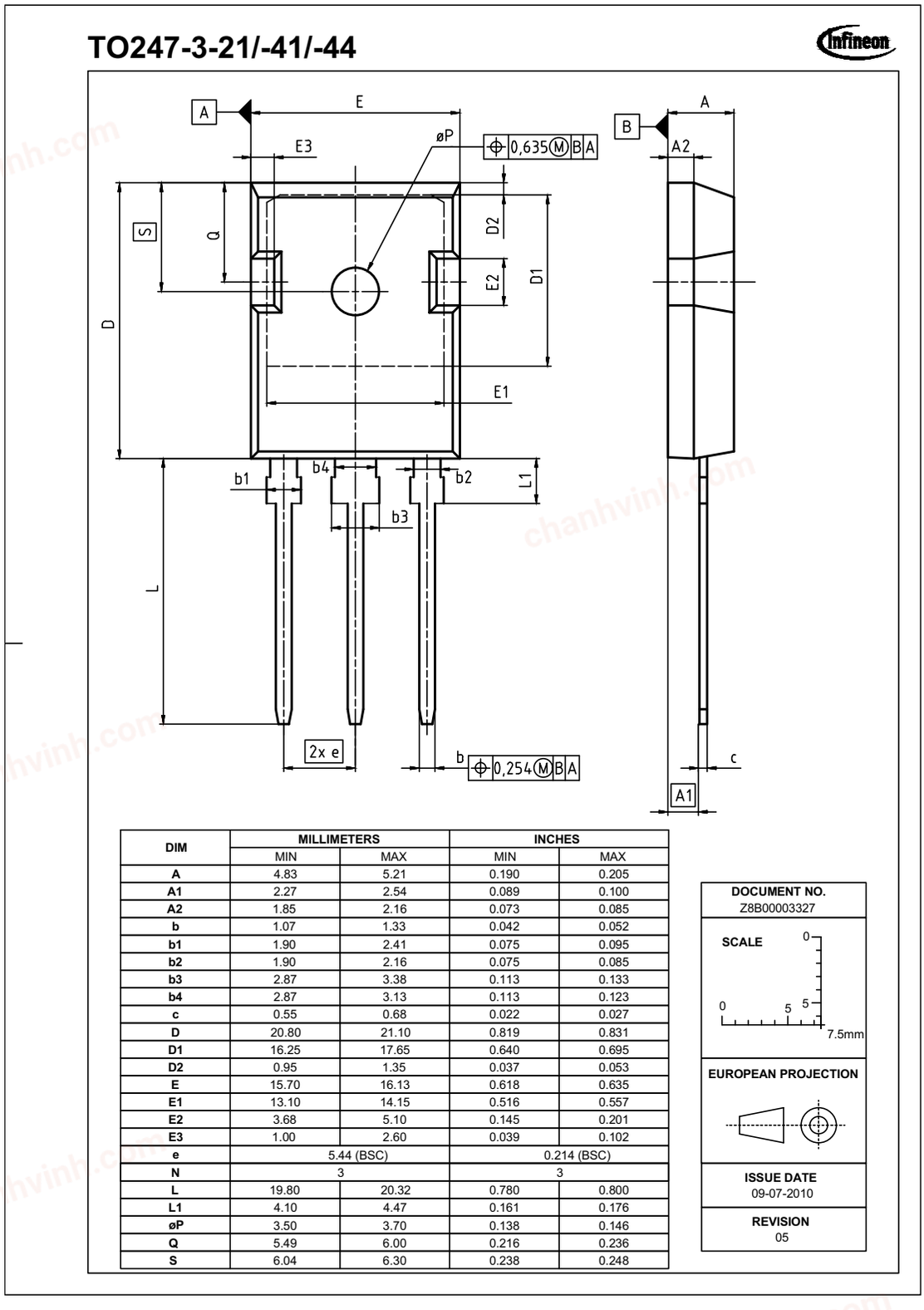

DIM	MILLIMETERS		INCHES	
	MIN	MAX	MIN	MAX
A	4.83	5.21	0.190	0.205
A1	2.27	2.54	0.089	0.100
A2	1.85	2.16	0.073	0.085
b	1.07	1.33	0.042	0.052
b1	1.90	2.41	0.075	0.095
b2	1.90	2.16	0.075	0.085
b3	2.87	3.38	0.113	0.133
b4	2.87	3.13	0.113	0.123
c	0.55	0.68	0.022	0.027
D	20.80	21.10	0.819	0.831
D1	16.25	17.65	0.640	0.695
D2	0.95	1.35	0.037	0.053
E	15.70	16.13	0.618	0.635
E1	13.10	14.15	0.516	0.557
E2	3.68	5.10	0.145	0.201
E3	1.00	2.60	0.039	0.102
e	5.44 (BSC)		0.214 (BSC)	
N	3		3	
L	19.80	20.32	0.780	0.800
L1	4.10	4.47	0.161	0.176
øP	3.50	3.70	0.138	0.146
Q	5.49	6.00	0.216	0.236
S	6.04	6.30	0.238	0.248

DOCUMENT NO.
Z8B00003327

SCALE
0 5 5 7.5mm

EUROPEAN PROJECTION

ISSUE DATE
09-07-2010

REVISION
05

Figure 1 Outlines TO-247, dimensions in mm/inches

chanhvinh.com

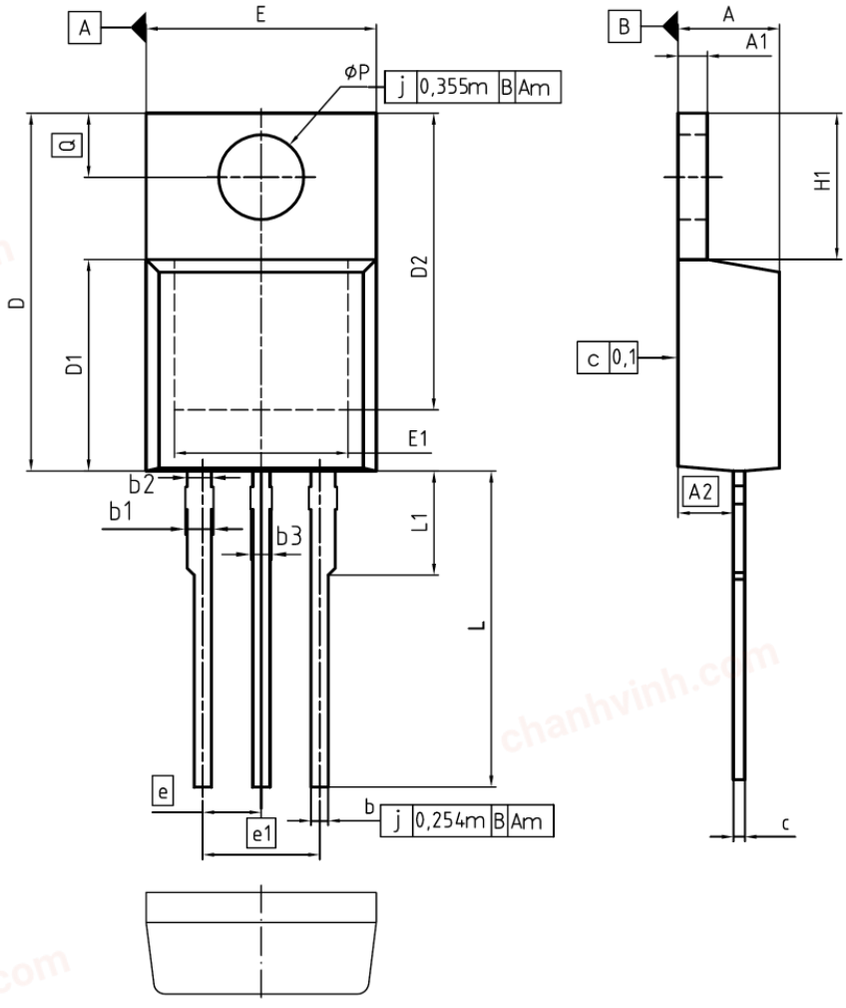

DIM	MILLIMETERS		INCHES	
	MIN	MAX	MIN	MAX
A	4.30	4.57	0.169	0.180
A1	1.17	1.40	0.046	0.055
A2	2.15	2.72	0.085	0.107
b	0.65	0.86	0.026	0.034
b1	0.95	1.40	0.037	0.055
b2	0.95	1.15	0.037	0.045
b3	0.65	1.15	0.026	0.045
c	0.33	0.60	0.013	0.024
D	14.81	15.95	0.583	0.628
D1	8.51	9.45	0.335	0.372
D2	12.19	13.10	0.480	0.516
E	9.70	10.36	0.382	0.408
E1	6.50	8.60	0.256	0.339
e	2.54		0.100	
e1	5.08		0.200	
N	3		3	
H1	5.90	6.90	0.232	0.272
L	13.00	14.00	0.512	0.551
L1	-	4.80	-	0.189
øP	3.60	3.89	0.142	0.153
Q	2.60	3.00	0.102	0.118

DOCUMENT NO.
Z8B00003318

SCALE 0 2.5 0 2.5 5mm

EUROPEAN PROJECTION

ISSUE DATE
23-08-2007

REVISION
05

Figure 2 Outlines TO-220, dimensions in mm/inches

chanhvinh.com

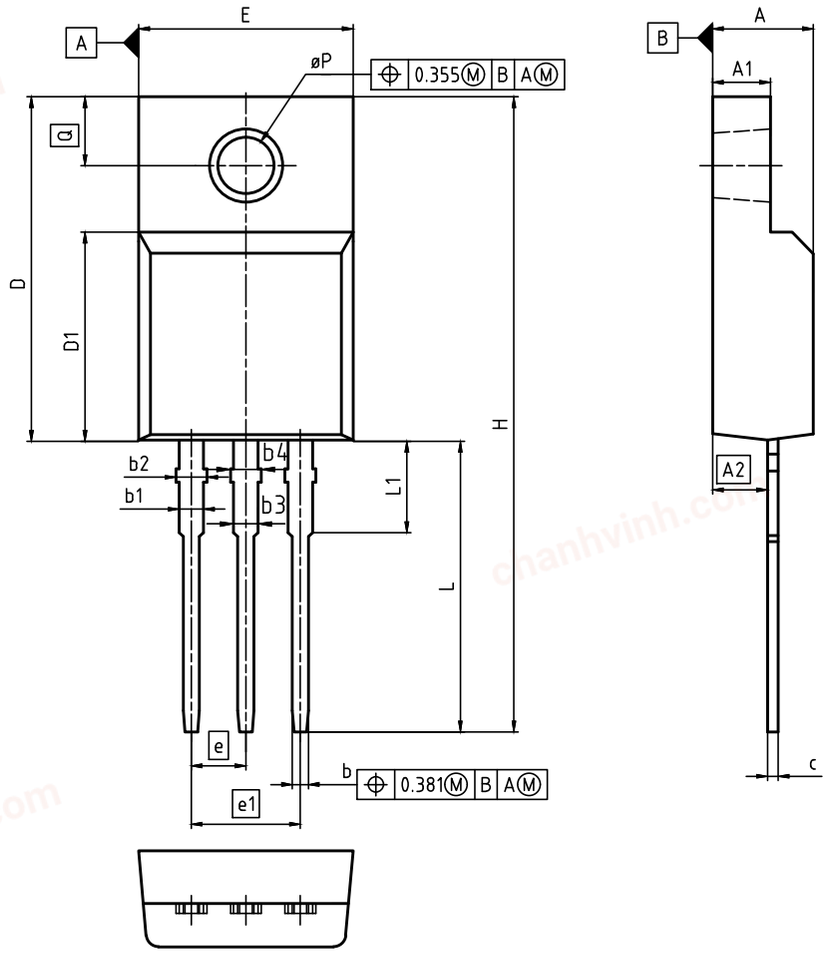

DIM	MILLIMETERS		INCHES	
	MIN	MAX	MIN	MAX
A	4.50	4.90	0.177	0.193
A1	2.34	2.85	0.092	0.112
A2	2.42	2.86	0.095	0.113
b	0.65	0.90	0.026	0.035
b1	0.95	1.38	0.037	0.054
b2	0.95	1.51	0.037	0.059
b3	0.65	1.38	0.026	0.054
b4	0.65	1.51	0.026	0.059
c	0.40	0.63	0.016	0.025
D	15.67	16.15	0.617	0.636
D1	8.97	9.83	0.353	0.387
E	10.00	10.65	0.394	0.419
e	2.54 (BSC)		0.100 (BSC)	
e1	5.08		0.200	
N	3		3	
H	28.70	29.75	1.130	1.171
L	12.78	13.75	0.503	0.541
L1	2.83	3.45	0.111	0.136
øP	2.95	3.38	0.116	0.133
Q	3.15	3.50	0.124	0.138

DOCUMENT NO.	Z8B00003319
SCALE	0, 2.5, 0, 2.5, 5mm
EUROPEAN PROJECTION	
ISSUE DATE	05-05-2014
REVISION	04

Figure 3 Outline PG-TO 220 FullPAK, dimensions in mm/inches

chanhvinh.com

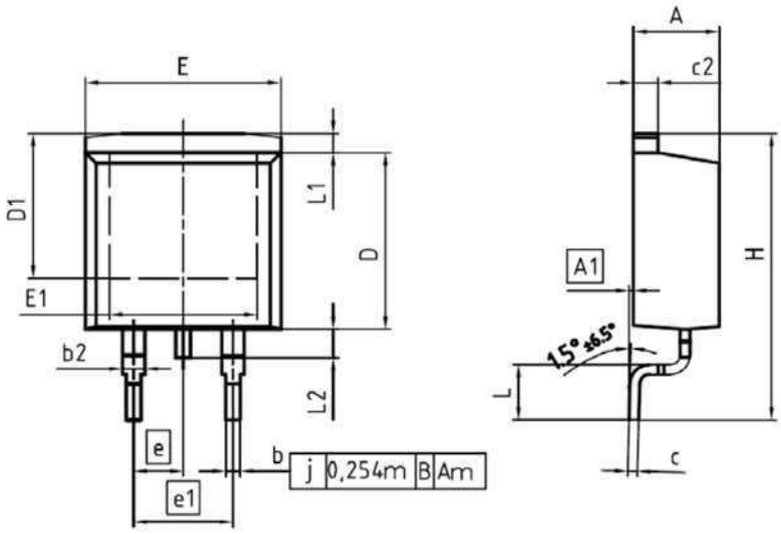

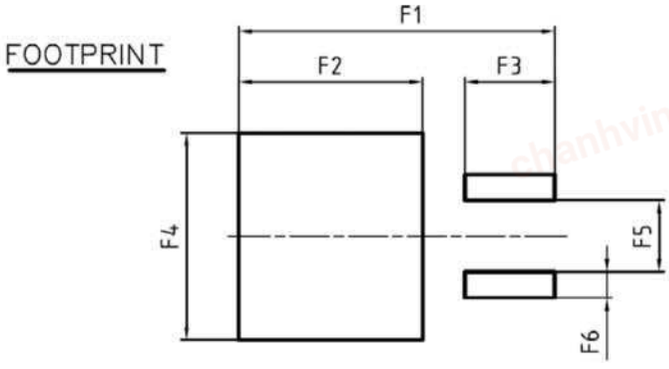

DIM	MILLIMETERS		INCHES	
	MIN	MAX	MIN	MAX
A	4.30	4.57	0.169	0.180
A1	0.00	0.25	0.000	0.010
b	0.65	0.85	0.026	0.033
b2	0.95	1.15	0.037	0.045
c	0.33	0.65	0.013	0.026
c2	1.17	1.40	0.046	0.055
D	8.51	9.45	0.335	0.372
D1	7.10	7.90	0.280	0.311
E	9.80	10.31	0.386	0.406
E1	6.50	8.60	0.256	0.339
e	2.54		0.100	
e1	5.08		0.200	
N	2		2	
H	14.61	15.88	0.575	0.625
L	2.29	3.00	0.090	0.118
L1	0.70	1.60	0.028	0.063
L2	1.00	1.78	0.039	0.070
F1	16.05	16.25	0.632	0.640
F2	9.30	9.50	0.366	0.374
F3	4.50	4.70	0.177	0.185
F4	10.70	10.90	0.421	0.429
F5	3.65	3.85	0.144	0.152
F6	1.25	1.45	0.049	0.057

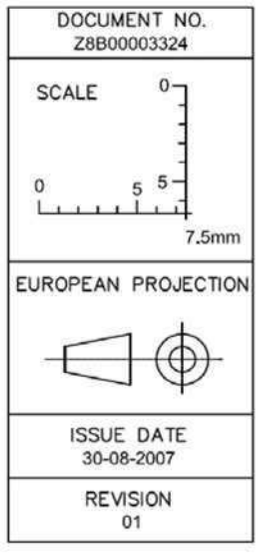

Figure 4 Outlines TO-263, dimensions in mm/inches

chanhvinh.com

8 Revision History

CoolMOS C6 600V CoolMOS™ C6 Power Transistor

Revision History: 2014-12-02, Rev 2.2	
Previous Revision:	
Revision	**Subjects (major changes since last revision)**
2.0	Release of final data sheet
2.1	New package outlines TO-247
2.2	PG-TO220 FullPAK package outline update (creation date: 2014-12-02)

We Listen to Your Comments

Any information within this document that you feel is wrong, unclear or missing at all?
Your feedback will help us to continuously improve the quality of this document.
Please send your proposal (including a reference to this document) to: **erratum@infineon.com**



Edition 2010-02-09

Published by
Infineon Technologies AG
81726 Munich, Germany

© 2010 Infineon Technologies AG
All Rights Reserved.

Legal Disclaimer

The information given in this document shall in no event be regarded as a guarantee of conditions or characteristics. With respect to any examples or hints given herein, any typical values stated herein and/or any information regarding the application of the device, Infineon Technologies hereby disclaims any and all warranties and liabilities of any kind, including without limitation, warranties of non-infringement of intellectual property rights of any third party.

Information

For further information on technology, delivery terms and conditions and prices, please contact the nearest Infineon Technologies Office (**www.infineon.com**).

Warnings

Due to technical requirements, components may contain dangerous substances. For information on the types in question, please contact the nearest Infineon Technologies Office.

Infineon Technologies component described in this Data Sheet may be used in life-support devices or systems and/or automotive, aviation and aerospace applications or systems only with the express written approval of Infineon Technologies, if a failure of such components can reasonably be expected to cause the failure of that life-support, automotive, aviation and aerospace device or system or to affect the safety or effectiveness of that device or system. Life support devices or systems are intended to be implanted in the human body or to support and/or maintain and sustain and/or protect human life. If they fail, it is reasonable to assume that the health of the user or other persons may be endangered.