chanhvinh.com

# MOSFET

Metal Oxide Semiconductor Field Effect Transistor

# CoolMOS™ C6 600V

600V CoolMOS™ C6 Power Transistor
IPx60R520C6

## Data Sheet

Rev. 2.2
Final

Power Management & Multimarket

chanhvinh.com



# 1 Description

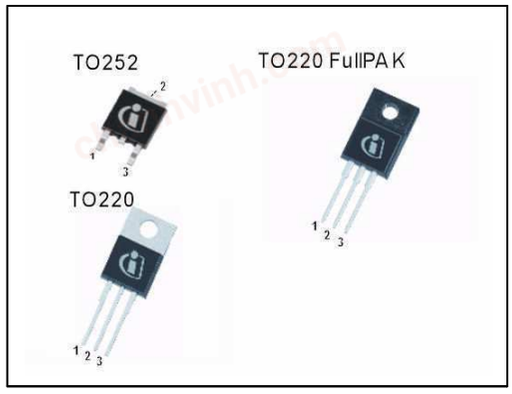


CoolMOS™ is a revolutionary technology for high voltage power MOSFETs, designed according to the superjunction (SJ) principle and pioneered by Infineon Technologies. CoolMOS™ C6 series combines the experience of the leading SJ MOSFET supplier with high class innovation. The offered devices provide all benefits of a fast switching SJ MOSFET while not sacrificing ease of use. Extremely low switching and conduction losses make switching applications even more efficient, more compact, lighter, and cooler.

RoHS

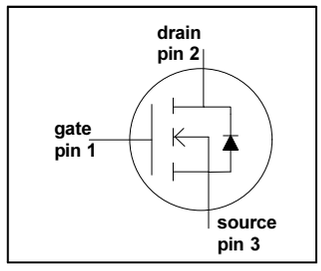


### Features

- Extremely low losses due to very low FOM $R_{dson}$*$Q_g$ and $E_{oss}$
- Very high commutation ruggedness
- Easy to use/drive
- JEDEC[1)] qualified, Pb-free plating

### Applications

PFC stages, hard switching PWM stages and resonant switching PWM stages for e.g. PC Silverbox, Adapter, LCD & PDP TV, Lighting, Server, Telecom and UPS.

Please note: For MOSFET paralleling the use of ferrite beads on the gate or separate totem poles is generally recommended.

**Table 1 Key Performance Parameters**

| Parameter | Value | Unit |
|---|---|---|
| $V_{DS}$ @ $T_{j,max}$ | 650 | V |
| $R_{DS(on),max}$ | 0.52 | Ω |
| $Q_{g,typ}$ | 23.4 | nC |
| $I_{D,pulse}$ | 22 | A |
| $E_{oss}$ @ 400V | 2.1 | µJ |
| Body diode d$i$/d$t$ | 500 | A/µs |

| Type / Ordering Code | Package | Marking | Related Links |
|---|---|---|---|
| IPD60R520C6 | PG-TO252 | 6R520C6 | IFX C6 Product Brief |
| IPP60R520C6 | PG-TO220 | | IFX C6 Portfolio |
| IPA60R520C6 | PG-TO220 FullPAK | | IFX CoolMOS Webpage |
| | | | IFX Design tools |

1) J-STD20 and JESD22

chanhvinh.com



# Table of Contents

1 Description . . . . . 2
Table of Contents . . . . . 3
2 Maximum ratings . . . . . 4
3 Thermal characteristics . . . . . 5
4 Electrical characteristics . . . . . 6
5 Electrical characteristics diagrams . . . . . 8
6 Test circuits . . . . . 13
7 Package outlines . . . . . 14
8 Revision History . . . . . 17

chanhvinh.com



## 2 Maximum ratings

at $T_j$ = 25 °C, unless otherwise specified.

**Table 2 Maximum ratings**

| Parameter | Symbol | Values | | | Unit | Note / Test Condition |
|---|---|---|---|---|---|---|
| | | Min. | Typ. | Max. | | |
| Continuous drain current[1] | $I_D$ | - | - | 8.1 | A | $T_C$= 25 °C |
| | | | | 5.1 | | $T_C$= 100°C |
| Pulsed drain current[2] | $I_{D,pulse}$ | - | - | 22 | A | $T_C$=25 °C |
| Avalanche energy, single pulse | $E_{AS}$ | - | - | 153 | mJ | $I_D$=1.4 A, $V_{DD}$=50 V (see table 21) |
| Avalanche energy, repetitive | $E_{AR}$ | - | - | 0.23 | | $I_D$=1.3 A, $V_{DD}$=50 V |
| Avalanche current, repetitive | $I_{AR}$ | - | - | 1.4 | A | |
| MOSFET dv/dt ruggedness | dv/dt | - | - | 50 | V/ns | $V_{DS}$=0...480 V |
| Gate source voltage | $V_{GS}$ | -20 | - | 20 | V | static |
| | | -30 | | 30 | | AC (f>1 Hz) |
| Power dissipation for TO-220, TO-252 | $P_{tot}$ | - | - | 66 | W | $T_C$=25 °C |
| Power dissipation for TO-220 FullPAK | $P_{tot}$ | - | - | 29 | W | $T_C$=25 °C |
| Operating and storage temperature | $T_j$, $T_{stg}$ | -55 | - | 150 | °C | |
| Mounting torque TO-220 | | - | - | 60 | Ncm | M3 and M3.5 screws |
| Mounting torque TO-220 FullPAK | | | | 50 | | M2.5 screws |
| Continuous diode forward current | $I_S$ | - | - | 7 | A | $T_C$=25 °C |
| Diode pulse current[2] | $I_{S,pulse}$ | - | - | 22 | A | $T_C$=25 °C |
| Reverse diode dv/dt[3] | dv/dt | - | - | 15 | V/ns | $V_{DS}$=0...400 V, $I_{SD} \leq I_D$, $T_j$=25 °C |
| Maximum diode commutation speed[3] | $di_f/dt$ | | | 500 | A/µs | (see table 22) |

1) Limited by $T_{j,max.}$ Maximum duty cycle D=0.75
2) Pulse width $t_p$ limited by $T_{j,max}$
3) Identical low side and high side switch with identical $R_G$

chanhvinh.com



# 3 Thermal characteristics

**Table 3 Thermal characteristics TO-220 (IPP60R520C6)**

| Parameter | Symbol | Values | | | Unit | Note / Test Condition |
|---|---|---|---|---|---|---|
| | | Min. | Typ. | Max. | | |
| Thermal resistance, junction - case | $R_{thJC}$ | - | - | 1.9 | °C/W | |
| Thermal resistance, junction - ambient | $R_{thJA}$ | - | - | 62 | | leaded |
| Soldering temperature, wavesoldering only allowed at leads | $T_{sold}$ | - | - | 260 | °C | 1.6 mm (0.063 in.) from case for 10 s |

**Table 4 Thermal characteristics TO-220FullPAK (IPA60R520C6)**

| Parameter | Symbol | Values | | | Unit | Note / Test Condition |
|---|---|---|---|---|---|---|
| | | Min. | Typ. | Max. | | |
| Thermal resistance, junction - case | $R_{thJC}$ | - | - | 4.3 | °C/W | |
| Thermal resistance, junction - ambient | $R_{thJA}$ | - | - | 80 | | leaded |
| Soldering temperature, wavesoldering only allowed at leads | $T_{sold}$ | - | - | 260 | °C | 1.6 mm (0.063 in.) from case for 10 s |

**Table 5 Thermal characteristics TO-252 (IPD60R520C6)**

| Parameter | Symbol | Values | | | Unit | Note / Test Condition |
|---|---|---|---|---|---|---|
| | | Min. | Typ. | Max. | | |
| Thermal resistance, junction - case | $R_{thJC}$ | - | - | 1.9 | °C/W | |
| Thermal resistance, junction - ambient | $R_{thJA}$ | - | - | 62 | | SMD version, device on PCB, minimal footprint |
| | | | 35 | | | SMD version, device on PCB, 6cm$^2$ cooling area[1)] |
| Soldering temperature, wave- & reflow soldering allowed | $T_{sold}$ | - | - | 260 | °C | reflow MSL1 |

1) Device on 40mm*40mm*1.5mm one layer epoxy PCB FR4 with 6cm$^2$ copper area (thickness 70µm) for drain connection. PCB is vertical without air stream cooling.

chanhvinh.com



# 4 Electrical characteristics

Electrical characteristics, at $T$j=25 °C, unless otherwise specified.

**Table 6 Static characteristics**

| Parameter | Symbol | Values | | | Unit | Note / Test Condition |
|---|---|---|---|---|---|---|
| | | Min. | Typ. | Max. | | |
| Drain-source breakdown voltage | $V_{(BR)DSS}$ | 600 | - | - | V | $V_{GS}$=0 V, $I_D$=0.25 mA |
| Gate threshold voltage | $V_{GS(th)}$ | 2.5 | 3 | 3.5 | | $V_{DS}$=$V_{GS}$, $I_D$=0.23mA |
| Zero gate voltage drain current | $I_{DSS}$ | - | - | 1 | µA | $V_{DS}$=600 V, $V_{GS}$=0 V, $T_j$=25 °C |
| | | - | 10 | - | | $V_{DS}$=600 V, $V_{GS}$=0 V, $T_j$=150 °C |
| Gate-source leakage current | $I_{GSS}$ | - | - | 100 | nA | $V_{GS}$=20 V, $V_{DS}$=0 V |
| Drain-source on-state resistance | $R_{DS(on)}$ | - | 0.47 | 0.52 | Ω | $V_{GS}$=10 V, $I_D$=2.8 A, $T_j$=25 °C |
| | | - | 1.22 | - | | $V_{GS}$=10 V, $I_D$=2.8A, $T_j$=150 °C |
| Gate resistance | $R_G$ | - | 17.5 | - | Ω | $f$=1 MHz, open drain |

**Table 7 Dynamic characteristics**

| Parameter | Symbol | Values | | | Unit | Note / Test Condition |
|---|---|---|---|---|---|---|
| | | Min. | Typ. | Max. | | |
| Input capacitance | $C_{iss}$ | - | 512 | - | pF | $V_{GS}$=0 V, $V_{DS}$=100 V, $f$=1 MHz |
| Output capacitance | $C_{oss}$ | - | 35 | - | | |
| Effective output capacitance, energy related[1)] | $C_{o(er)}$ | - | 23 | - | | $V_{GS}$=0 V, $V_{DS}$=0...480 V |
| Effective output capacitance, time related[2)] | $C_{o(tr)}$ | - | 100 | - | | $I_D$=constant, $V_{GS}$=0 V $V_{DS}$=0...480V |
| Turn-on delay time | $t_{d(on)}$ | - | 13 | - | ns | $V_{DD}$=400 V, $V_{GS}$=13 V, $I_D$=3.5 A, $R_G$= 6.8 Ω (see table 20) |
| Rise time | $t_r$ | - | 10 | - | | |
| Turn-off delay time | $t_{d(off)}$ | - | 85 | - | | |
| Fall time | $t_f$ | - | 14 | - | | |

1) $C_{o(er)}$ is a fixed capacitance that gives the same stored energy as $C_{oss}$ while $V_{DS}$ is rising from 0 to 80% $V_{(BR)DSS}$

2) $C_{o(tr)}$ is a fixed capacitance that gives the same charging time as $C_{oss}$ while $V_{DS}$ is rising from 0 to 80% $V_{(BR)DSS}$

chanhvinh.com



**Table 8 Gate charge characteristics**

| Parameter | Symbol | Values | | | Unit | Note / Test Condition |
|---|---|---|---|---|---|---|
| | | Min. | Typ. | Max. | | |
| Gate to source charge | $Q_{gs}$ | - | 2.8 | - | nC | $V_{DD}$=480 V, $I_D$=3.5A, $V_{GS}$=0 to 10 V |
| Gate to drain charge | $Q_{gd}$ | - | 12 | - | | |
| Gate charge total | $Q_g$ | - | 23.4 | - | | |
| Gate plateau voltage | $V_{plateau}$ | - | 5.4 | - | V | |

**Table 9 Reverse diode characteristics**

| Parameter | Symbol | Values | | | Unit | Note / Test Condition |
|---|---|---|---|---|---|---|
| | | Min. | Typ. | Max. | | |
| Diode forward voltage | $V_{SD}$ | - | 0.9 | - | V | $V_{GS}$=0 V, $I_F$=3.5A, $T_j$=25 °C |
| Reverse recovery time | $t_{rr}$ | - | 260 | - | ns | $V_R$=400 V, $I_F$=3.5A, d$i_F$/d$t$=100 A/µs (see table 22) |
| Reverse recovery charge | $Q_{rr}$ | - | 2.5 | - | µC | |
| Peak reverse recovery current | $I_{rrm}$ | - | 18 | - | A | |

chanhvinh.com



# 5 Electrical characteristics diagrams

**Table 10**

| Power dissipation<br>TO-220, TO-252 | Power dissipation<br>TO-220 FullPAK |
|---|---|
| 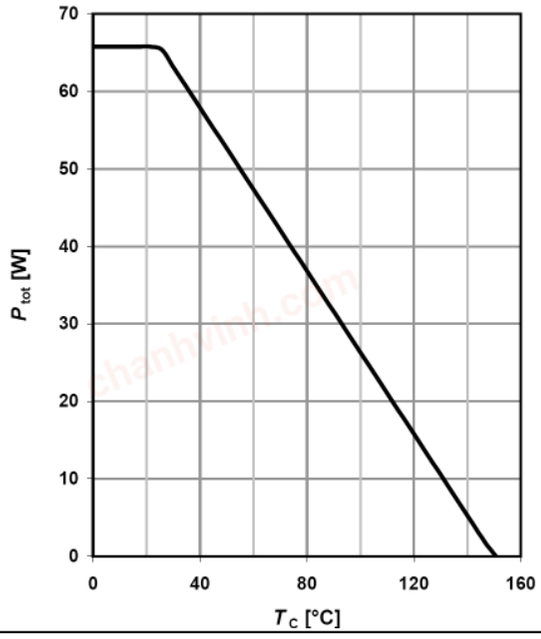 | 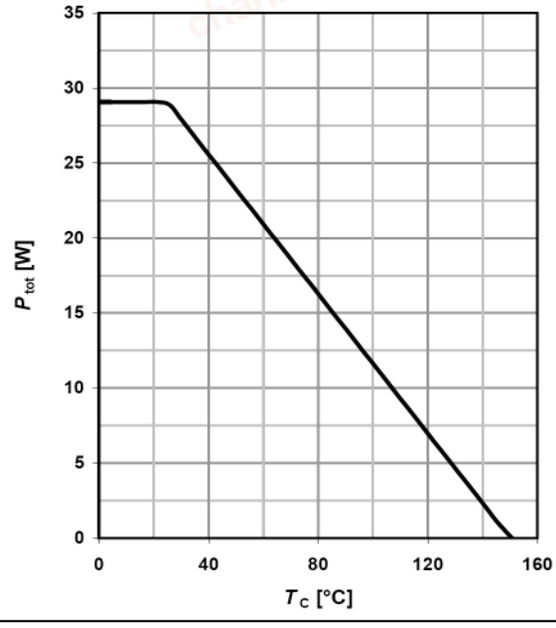 |
| $P_{tot} = f(T_C)$ | $P_{tot} = f(T_C)$ |

**Table 11**

| Max. transient thermal impedance<br>TO-220, TO-252 | Max. transient thermal impedance<br>TO-220 FullPAK |
|---|---|
| 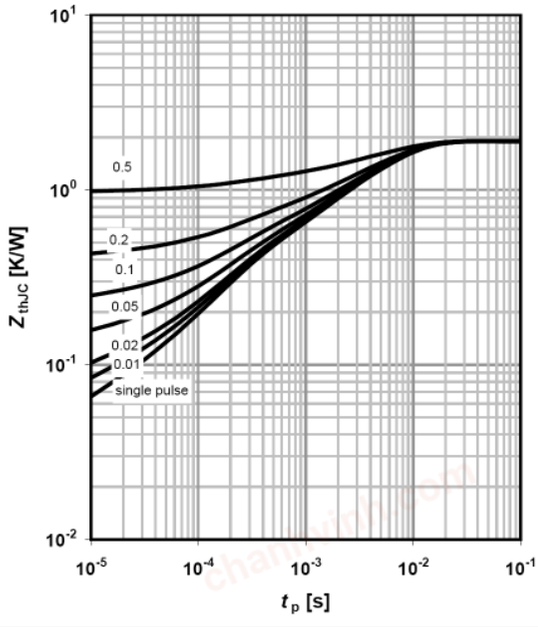 | 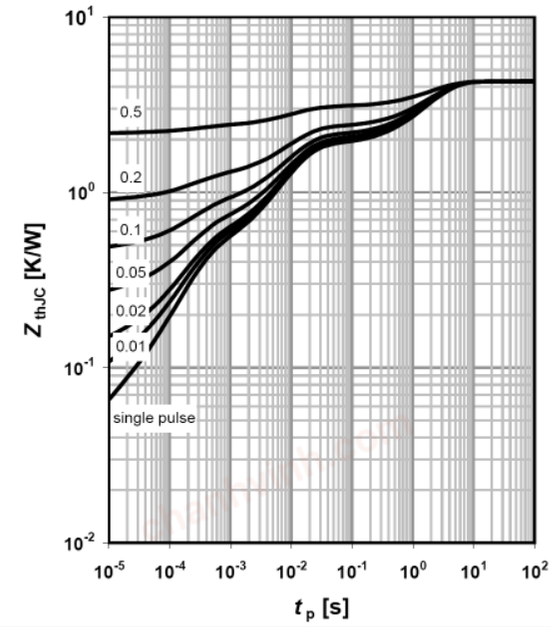 |
| $Z_{(thJC)}$=f(tp); parameter: D=$t_p$/T | $Z_{(thJC)}$=f(tp); parameter: D=$t_p$/T |

chanhvinh.com



**Table 12**

| Safe operating area $T_C$=25 °C<br>TO-220, TO-252 | Safe operating area $T_C$=25 °C<br>TO-220 FullPAK |
|---|---|
| 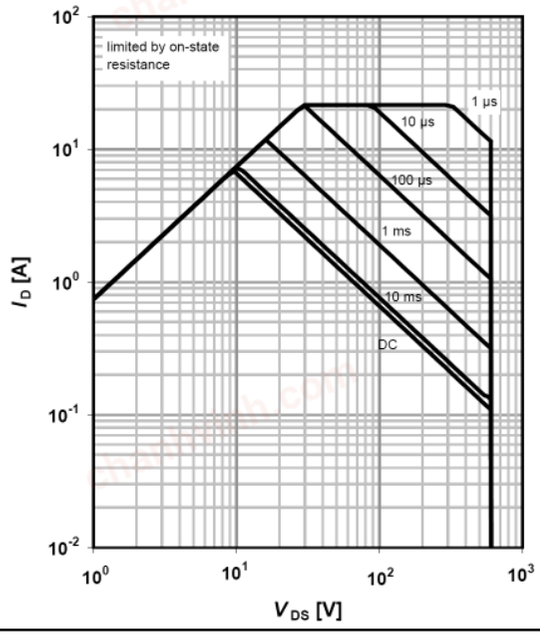 | 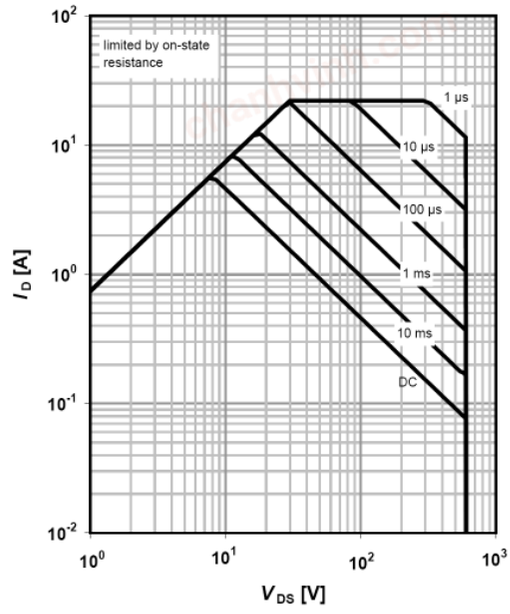 |
| $I_D$=f($V_{DS}$); $T_C$=25 °C; D=0; parameter $t_p$ | $I_D$=f($V_{DS}$); $T_C$=25 °C; D=0; parameter $t_p$ |

**Table 13**

| Safe operating area $T_C$=80 °C<br>TO-220, TO-252 | Safe operating area $T_C$=80 °C<br>TO-220 FullPAK |
|---|---|
| 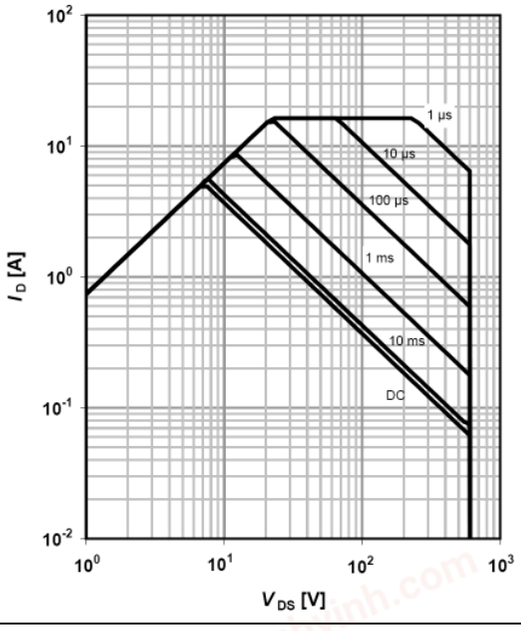 | 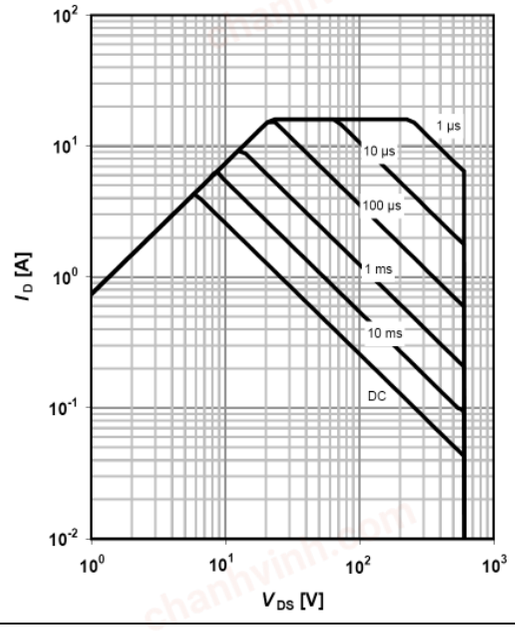 |
| $I_D$=f($V_{DS}$); $T_C$=80 °C; D=0; parameter $t_p$ | $I_D$=f($V_{DS}$); $T_C$=80 °C; D=0; parameter $t_p$ |

chanhvinh.com



**Table 14**

| Typ. output characteristics $T_j$=25 °C | Typ. output characteristics $T_j$=125 °C |
|---|---|
| 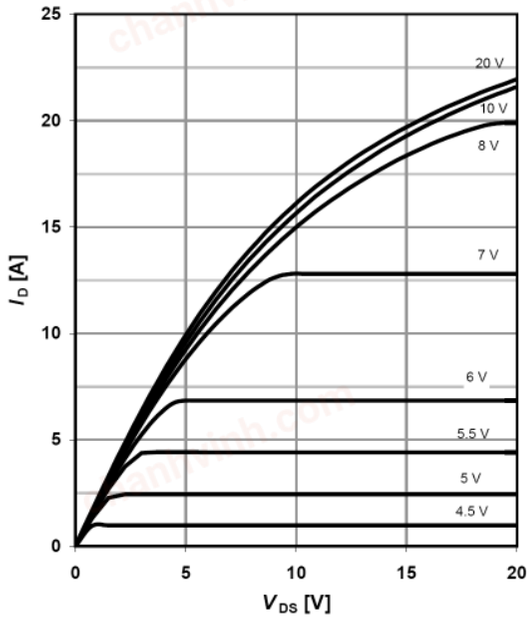 | 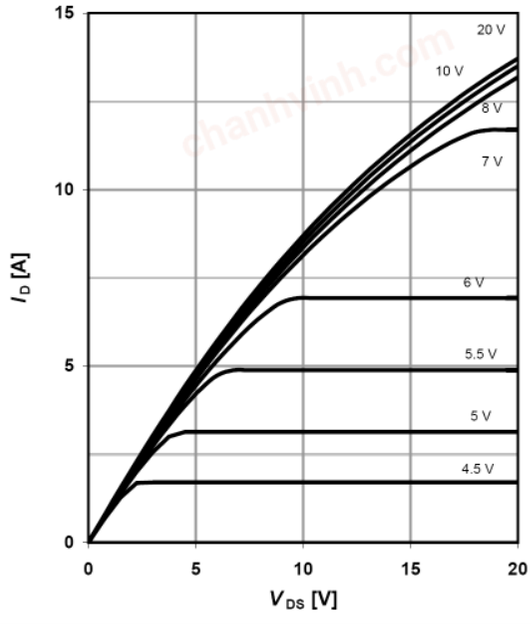 |
| $I_D$=f($V_{DS}$); $T_j$=25 °C; parameter: $V_{GS}$ | $I_D$=f($V_{DS}$); $T_j$=125 °C; parameter: $V_{GS}$ |

**Table 15**

| Typ. drain-source on-state resistance | Drain-source on-state resistance |
|---|---|
| 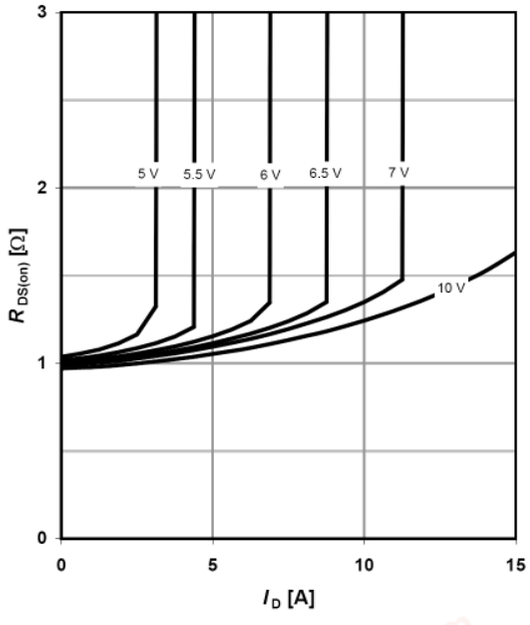 | 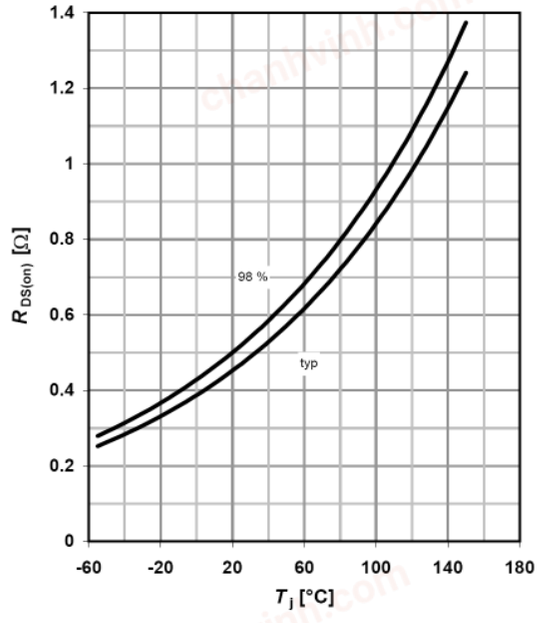 |
| $R_{DS(on)}$=f($I_D$); $T_j$=125 °C; parameter: $V_{GS}$ | $R_{DS(on)}$=f($T_j$); $I_D$=2.8 A; $V_{GS}$=10 V |

chanhvinh.com



**Table 16**

| Typ. transfer characteristics | Typ. gate charge |
|---|---|
| 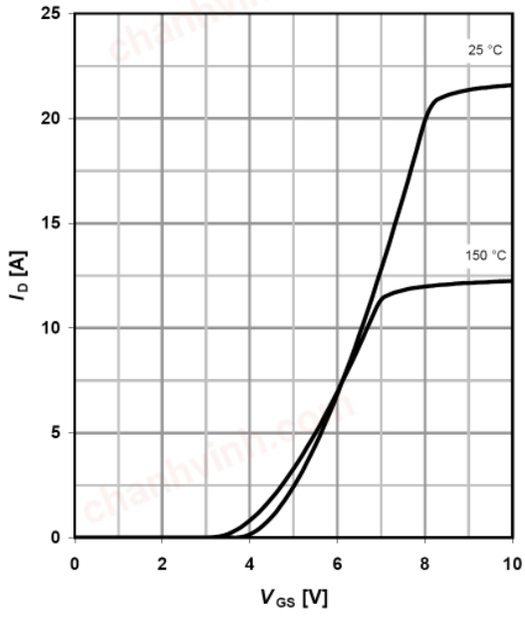 | 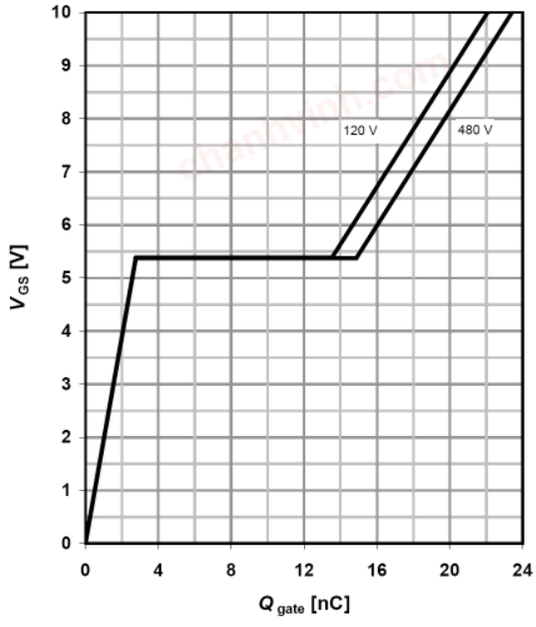 |
| $I_D$=f($V_{GS}$); $V_{DS}$=20V | $V_{GS}$=f($Q_{gate}$), $I_D$=3.5 A pulsed |

**Table 17**

| Avalanche energy | Drain-source breakdown voltage |
|---|---|
| 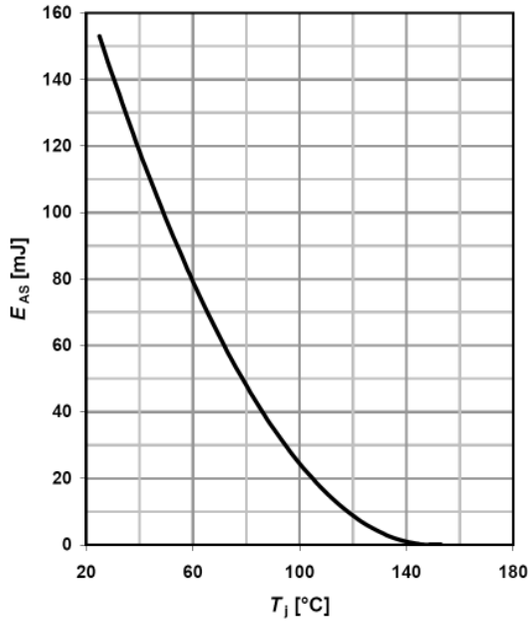 | 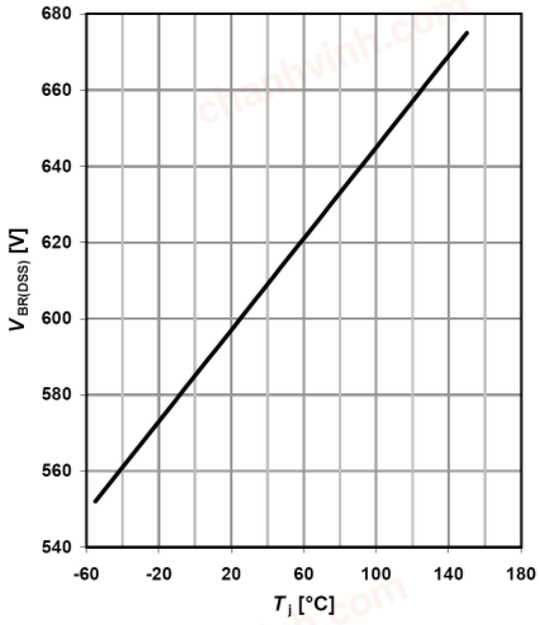 |
| $E_{AS}$=f($T_j$); $I_D$=1.4 A; $V_{DD}$=50 V | $V_{BR(DSS)}$=f($T_j$); $I_D$=0.25 mA |

chanhvinh.com



**Table 18**

| Typ. capacitances | Typ. $C_{oss}$ stored energy |
|---|---|
| 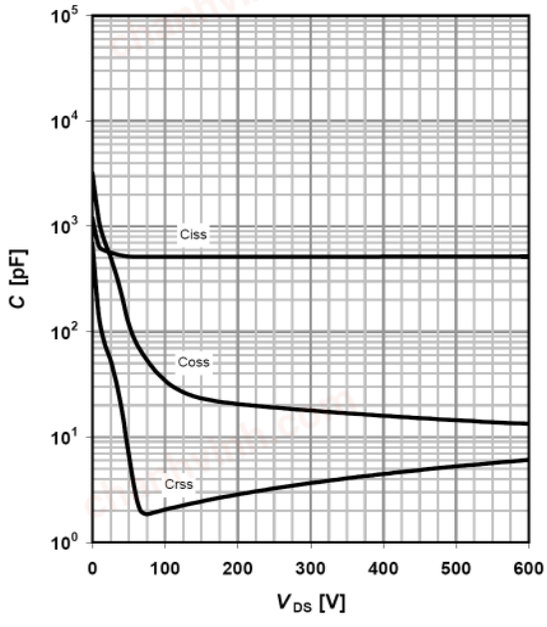 | 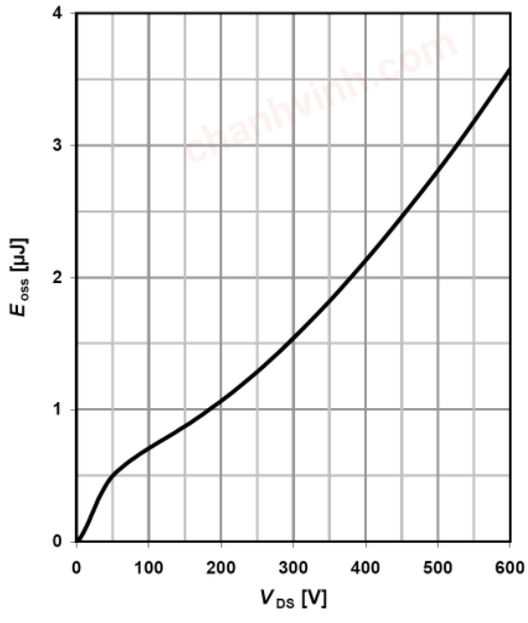 |
| C=f($V_{DS}$); $V_{GS}$=0 V; $f$=1 MHz | $E_{oss}$=f($V_{DS}$) |

**Table 19**

| Forward characteristics of reverse diode |
|---|
| 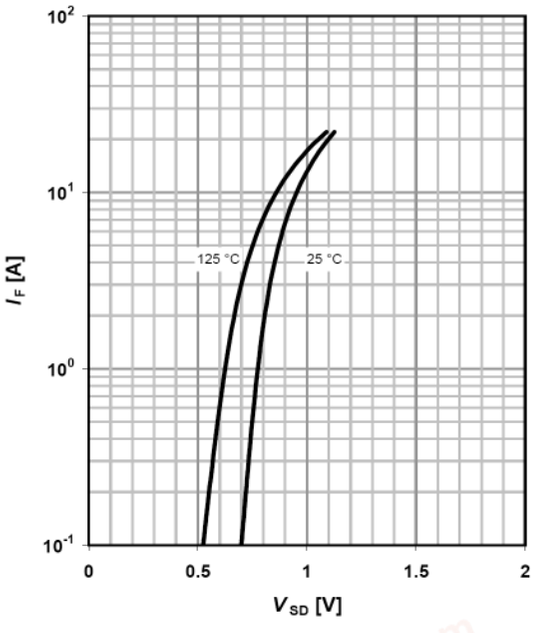 |
| $I_F$=f($V_{SD}$); parameter: $T_j$ |

chanhvinh.com



# 6 Test circuits

**Table 20 Switching times test circuit and waveform for inductive load**

| Switching times test circuit for inductive load | Switching time waveform |
|---|---|
| 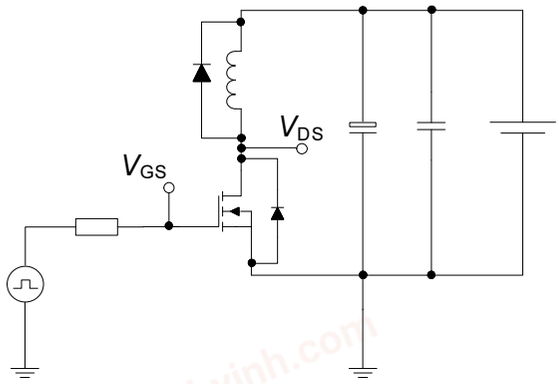 | 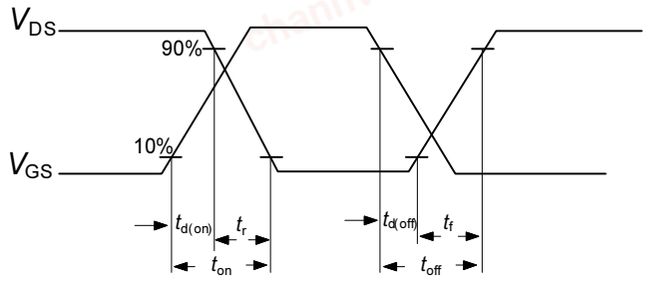 |



**Table 21 Unclamped inductive load test circuit and waveform**

| Unclamped inductive load test circuit | Unclamped inductive waveform |
|---|---|
| 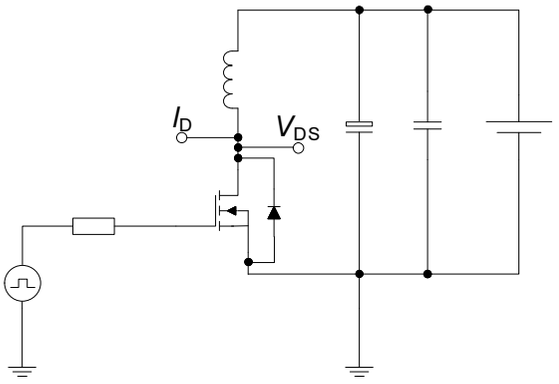 | 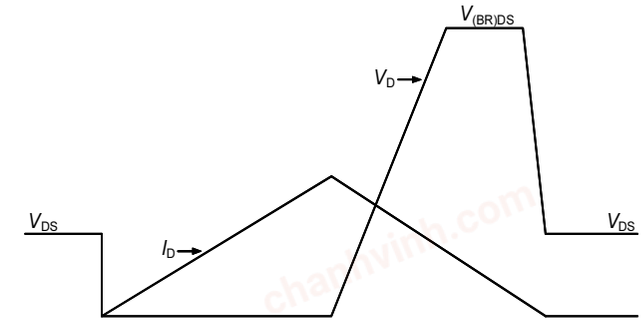 |



**Table 22 Test circuit and waveform for diode characteristics**

| Test circuit for diode characteristics | Diode recovery waveform |
|---|---|
| 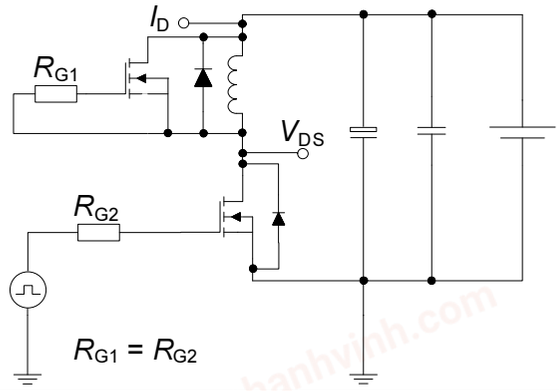 | 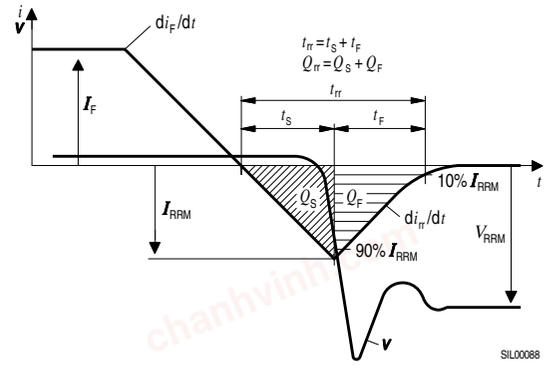 |

chanhvinh.com



# 7 Package outlines

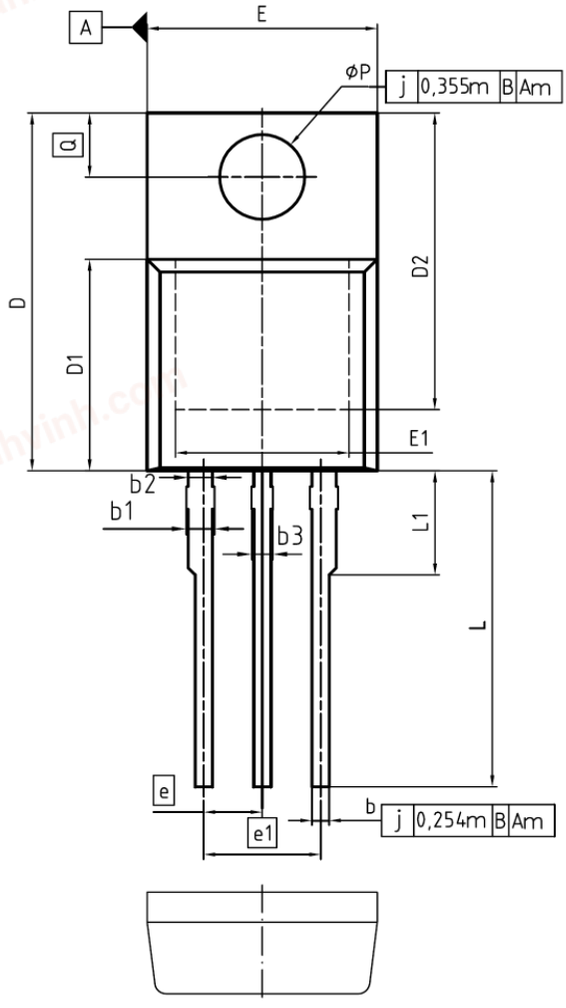


| DIM | MILLIMETERS | | INCHES | |
|---|---|---|---|---|
| | MIN | MAX | MIN | MAX |
| A | 4.30 | 4.57 | 0.169 | 0.180 |
| A1 | 1.17 | 1.40 | 0.046 | 0.055 |
| A2 | 2.15 | 2.72 | 0.085 | 0.107 |
| b | 0.65 | 0.86 | 0.026 | 0.034 |
| b1 | 0.95 | 1.40 | 0.037 | 0.055 |
| b2 | 0.95 | 1.15 | 0.037 | 0.045 |
| b3 | 0.65 | 1.15 | 0.026 | 0.045 |
| c | 0.33 | 0.60 | 0.013 | 0.024 |
| D | 14.81 | 15.95 | 0.583 | 0.628 |
| D1 | 8.51 | 9.45 | 0.335 | 0.372 |
| D2 | 12.19 | 13.10 | 0.480 | 0.516 |
| E | 9.70 | 10.36 | 0.382 | 0.408 |
| E1 | 6.50 | 8.60 | 0.256 | 0.339 |
| e | 2.54 | | 0.100 | |
| e1 | 5.08 | | 0.200 | |
| N | 3 | | 3 | |
| H1 | 5.90 | 6.90 | 0.232 | 0.272 |
| L | 13.00 | 14.00 | 0.512 | 0.551 |
| L1 | - | 4.80 | - | 0.189 |
| øP | 3.60 | 3.89 | 0.142 | 0.153 |
| Q | 2.60 | 3.00 | 0.102 | 0.118 |

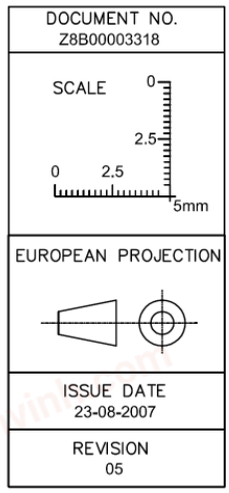


**Figure 1 Outlines TO-220, dimensions in mm/inches**

chanhvinh.com



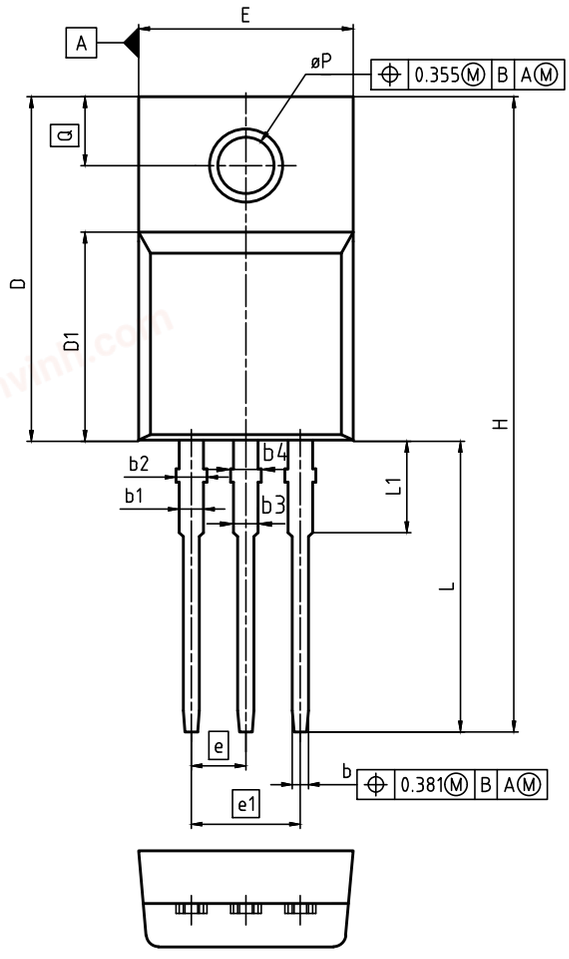


| DIM | MILLIMETERS | | INCHES | |
|---|---|---|---|---|
| | MIN | MAX | MIN | MAX |
| A | 4.50 | 4.90 | 0.177 | 0.193 |
| A1 | 2.34 | 2.85 | 0.092 | 0.112 |
| A2 | 2.42 | 2.86 | 0.095 | 0.113 |
| b | 0.65 | 0.90 | 0.026 | 0.035 |
| b1 | 0.95 | 1.38 | 0.037 | 0.054 |
| b2 | 0.95 | 1.51 | 0.037 | 0.059 |
| b3 | 0.65 | 1.38 | 0.026 | 0.054 |
| b4 | 0.65 | 1.51 | 0.026 | 0.059 |
| c | 0.40 | 0.63 | 0.016 | 0.025 |
| D | 15.67 | 16.15 | 0.617 | 0.636 |
| D1 | 8.97 | 9.83 | 0.353 | 0.387 |
| E | 10.00 | 10.65 | 0.394 | 0.419 |
| e | 2.54 (BSC) | | 0.100 (BSC) | |
| e1 | 5.08 | | 0.200 | |
| N | 3 | | 3 | |
| H | 28.70 | 29.75 | 1.130 | 1.171 |
| L | 12.78 | 13.75 | 0.503 | 0.541 |
| L1 | 2.83 | 3.45 | 0.111 | 0.136 |
| øP | 2.95 | 3.38 | 0.116 | 0.133 |
| Q | 3.15 | 3.50 | 0.124 | 0.138 |

| | |
|---|---|
| DOCUMENT NO. | Z8B00003319 |
| SCALE | 0 2.5 0 2.5 5mm |
| EUROPEAN PROJECTION | |
| ISSUE DATE | 05-05-2014 |
| REVISION | 04 |

**Figure 2 Outline PG-TO 220 FullPAK, dimensions in mm/inches**

chanhvinh.com



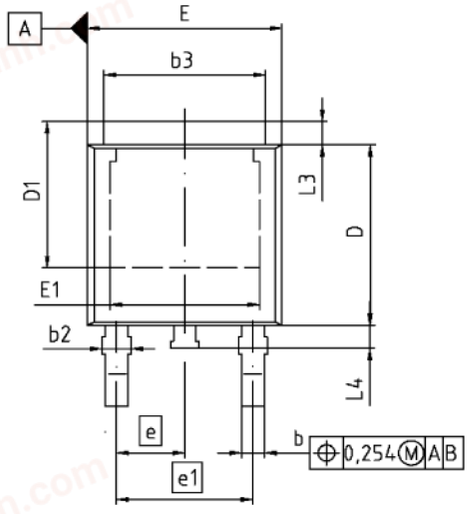


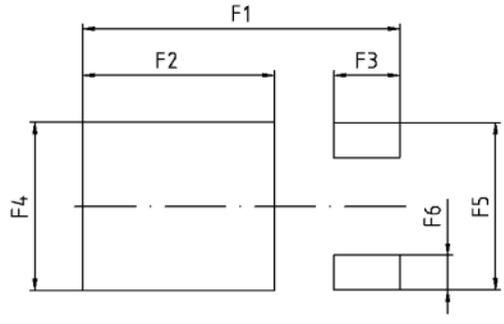


| DIM | MILLIMETERS | | INCHES | |
|---|---|---|---|---|
| | MIN | MAX | MIN | MAX |
| A | 2.16 | 2.41 | 0.085 | 0.095 |
| A1 | 0.00 | 0.15 | 0.000 | 0.006 |
| b | 0.64 | 0.89 | 0.025 | 0.035 |
| b2 | 0.65 | 1.15 | 0.026 | 0.045 |
| b3 | 5.00 | 5.50 | 0.197 | 0.217 |
| c | 0.46 | 0.60 | 0.018 | 0.024 |
| c2 | 0.46 | 0.98 | 0.018 | 0.039 |
| D | 5.97 | 6.22 | 0.235 | 0.245 |
| D1 | 5.02 | 5.84 | 0.198 | 0.230 |
| E | 6.40 | 6.73 | 0.252 | 0.265 |
| E1 | 4.70 | 5.21 | 0.185 | 0.205 |
| e | 2.29 | | 0.090 | |
| e1 | 4.57 | | 0.180 | |
| N | 3 | | 3 | |
| H | 9.40 | 10.48 | 0.370 | 0.413 |
| L | 1.18 | 1.70 | 0.046 | 0.067 |
| L3 | 0.90 | 1.25 | 0.035 | 0.049 |
| L4 | 0.51 | 1.00 | 0.020 | 0.039 |
| F1 | 10.50 | 10.70 | 0.413 | 0.421 |
| F2 | 6.30 | 6.50 | 0.248 | 0.256 |
| F3 | 2.10 | 2.30 | 0.083 | 0.091 |
| F4 | 5.70 | 5.90 | 0.224 | 0.232 |
| F5 | 5.66 | 5.86 | 0.223 | 0.231 |
| F6 | 1.10 | 1.30 | 0.043 | 0.051 |

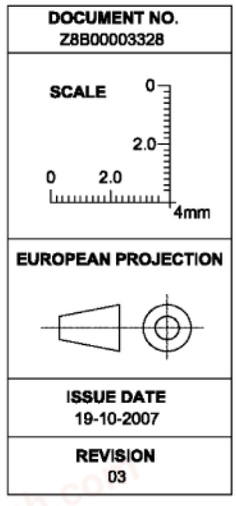


**Figure 3 Outlines TO-252, dimensions in mm/inches**

chanhvinh.com



## Revision History

IPx60R520C6

**Revision: 2015-02-09, Rev. 2.2**

Previous Revision

| Revision | Date | Subjects (major changes since last revision) |
|---|---|---|
| 2.0 | 2011-06-08 | Release of final data sheet |
| 2.1 | 2011-09-14 | - |
| 2.2 | 2015-02-09 | PG-TO220 FullPAK package outline update (creation:2014-12-10) |

**We Listen to Your Comments**
Any information within this document that you feel is wrong, unclear or missing at all? Your feedback will help us to continuously improve the quality of this document. Please send your proposal (including a reference to this document) to:
**erratum@infineon.com**

**Published by**
**Infineon Technologies AG**
**81726 München, Germany**
**© 2015 Infineon Technologies AG**
**All Rights Reserved.**

**Legal Disclaimer**
The information given in this document shall in no event be regarded as a guarantee of conditions or characteristics. With respect to any examples or hints given herein, any typical values stated herein and/or any information regarding the application of the device, Infineon Technologies hereby disclaims any and all warranties and liabilities of any kind, including without limitation, warranties of non-infringement of intellectual property rights of any third party.

**Information**
For further information on technology, delivery terms and conditions and prices please contact your nearest Infineon Technologies Office (**www.infineon.com**).

**Warnings**
Due to technical requirements, components may contain dangerous substances. For information on the types in question, please contact the nearest Infineon Technologies Office.
The Infineon Technologies component described in this Data Sheet may be used in life-support devices or systems and/or automotive, aviation and aerospace applications or systems only with the express written approval of Infineon Technologies, if a failure of such components can reasonably be expected to cause the failure of that life-support, automotive, aviation and aerospace device or system or to affect the safety or effectiveness of that device or system. Life support devices or systems are intended to be implanted in the human body or to support and/or maintain and sustain and/or protect human life. If they fail, it is reasonable to assume that the health of the user or other persons may be endangered.