chanhvinh.com



# CIPOS™ Micro IPM 600 V, 2 A

## IM241 Series

## Description

IM241-S6 is a 3-phase Intelligent Power Module (IPM) designed for high-efficiency appliance motor drives such as fans and pumps. This IPM is available in both fast and slow speeds for low loss and low EMI operation respectively.

## Features

- 600V 3-phase inverter including gate drivers & bootstrap function
- Reverse Conducting IGBT Gen 2 (RCD2) optimized for motor drives
- Temperature monitor
- Accurate overcurrent shutdown (±5%)
- Fault reporting and programmable fault clear
- Advanced input filter with shoot-through protection
- Optimized dV/dt for loss and EMI trade offs
- Open-emitter for single and leg-shunt current sensing
- 3.3V logic compatible
- Isolation 2000VRMS, 1min




SOP 29x12 DIP 29x12

## Potential Applications

- Fans
- Pumps

## Product validation

Qualified for industrial applications according to the relevant tests of JEDEC47/20/22.

**Table 1 Product Information**

| Base Part Number | Package Type | Standard Pack | |
|---|---|---|---|
| | | Form | Quantity |
| IM241-S6T2*y* | DIP 29x12 | Tube | 240 |
| IM241-S6S1*y* | SOP 29x12 | Tube | 240 |
| | | Tape & Reel | 500 |

*y* = B (fast speed for low losses; for x = S, M, L) or J (slow speed for low EMI; for *x* = S, M)

chanhvinh.com



# Table of contents

**Description 1**
**Features 1**
**Potential Applications ..... 1**
**Product validation ..... 1**
**Table of contents ..... 2**
**1 Internal Electrical Schematic ..... 3**
**2 Pin Configuration ..... 4**
2.1 Pin Assignment ..... 4
2.2 Pin Descriptions ..... 5
**3 Absolute Maximum Rating ..... 7**
3.1 Module ..... 7
3.2 Inverter ..... 7
3.3 Control ..... 7
**4 Thermal Characteristics ..... 8**
**5 Recommended Operating Conditions ..... 9**
**6 Static Parameters ..... 10**
6.1 Inverter ..... 10
6.2 Control ..... 10
**7 Dynamic Parameters ..... 12**
7.1 Inverter ..... 12
7.2 Control ..... 13
**8 Thermistor Characteristics ..... 14**
**9 Mechanical Characteristics and Ratings ..... 15**
**10 Qualification Information ..... 16**
**11 Diagrams & Tables ..... 17**
11.1 $T_C$ Measurement Point ..... 17
11.2 Backside Curvature Measurement Points ..... 17
11.3 Input-Output Logic Table ..... 18
11.4 Switching Time Definitions ..... 19
**12 Application Guide ..... 20**
12.1 Typical Application Schematic ..... 20
12.2 $T_J$ vs $T_{TH}$ ..... 21
12.3 $-V_S$ Immunity ..... 22
**13 Package Outline ..... 23**
13.1 DIP 29x12 ..... 23
13.2 SOP 29x12 ..... 24
**14 Revision History ..... 25**

chanhvinh.com



# 1 Internal Electrical Schematic

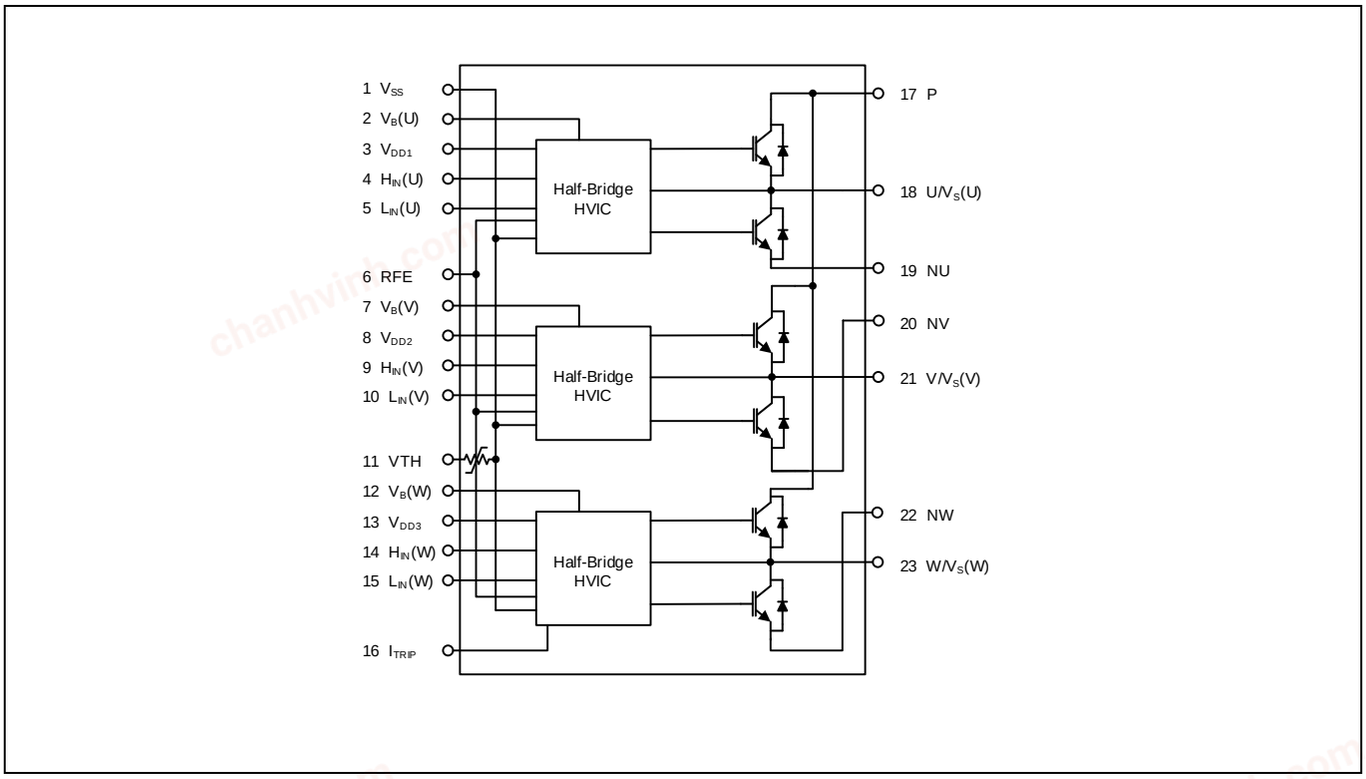


**Figure 1 Internal electrical schematic.**

chanhvinh.com



# 2 Pin Configuration

## 2.1 Pin Assignment

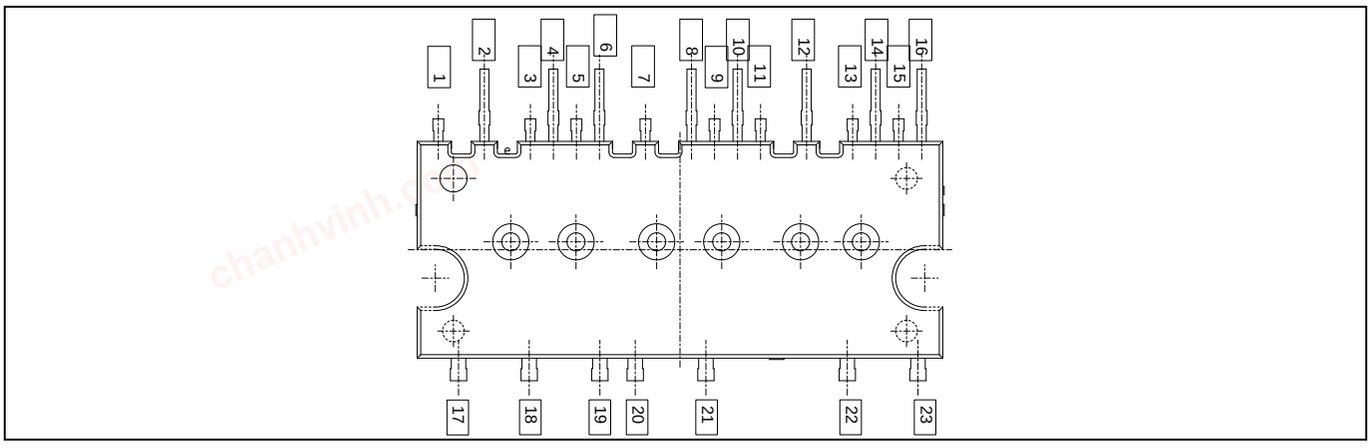


**Figure 2 Module pinout**

**Table 2 Pin Assignment**

| Pin | Name | Description |
|---|---|---|
| 1 | $V_{SS}$ | Logic ground |
| 2 | $V_B$(U) | U-phase high-side floating IC supply voltage |
| 3 | $V_{DD1}$ | Low-side control supply 1 |
| 4 | $H_{IN}$(U) | U-phase high-side gate driver input |
| 5 | $L_{IN}$(U) | U-phase low-side gate driver input |
| 6 | RFE | RCIN / Fault / Enable |
| 7 | $V_B$(V) | V-phase high-side floating IC supply voltage |
| 8 | $V_{DD2}$ | Low-side control supply 2 |
| 9 | $H_{IN}$(V) | V-phase high-side gate driver input |
| 10 | $L_{IN}$(V) | V-phase low-side gate driver input |
| 11 | VTH | Thermistor output |
| 12 | $V_B$(W) | W-phase high-side floating IC supply voltage |
| 13 | $V_{DD3}$ | Low-side control supply 3 |
| 14 | $H_{IN}$(W) | W-phase high-side gate driver input |
| 15 | $L_{IN}$(W) | W-phase low-side gate driver input |
| 16 | $I_{TRIP}$ | Over-current protection input |
| 17 | P | DC bus voltage positive |
| 18 | U/$V_S$(U) | Motor U-phase output, U-phase high-side floating IC supply offset voltage |
| 19 | NU | U-phase low-side emitter |
| 20 | NV | U-phase low-side emitter -phase low-side emitter |
| 21 | V/$V_S$(V) | Motor V-phase output, V-phase high-side floating IC supply offset voltage |
| 22 | NW | W-phase low-side emitter |
| 23 | W/$V_S$(W) | Motor W-phase output, W-phase high-side floating IC supply offset voltage |

chanhvinh.com



## 2.2 Pin Descriptions

### $H_{IN}$(U,V,W) and $L_{IN}$(U,V,W) (Low side and high side control pins)

These pins are positive logic and they are responsible for the control of the integrated IGBT. The Schmitt-trigger input thresholds of them are such to guarantee LSTTL and CMOS compatibility down to 3.3V controller outputs. Pull-down resistor of about 800kΩ is internally provided to pre-bias inputs during supply start-up and an ESD diode is provided for pin protection purposes. Input Schmitt-trigger and noise filter provide beneficial noise rejection to short input pulses.

The noise filter suppresses control pulses which are below the filter time $T_{FILIN}$. The filter acts according to Figure 4.

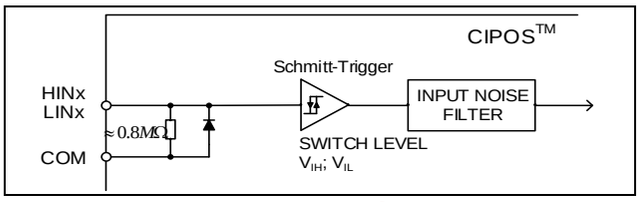


**Figure 3 Input pin structure**

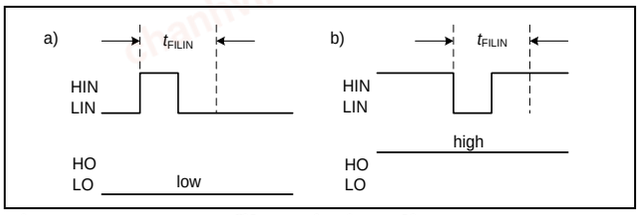


**Figure 4 Input filter timing diagram**

The integrated gate drive provides additionally a shoot through prevention capability which avoids the simultaneous on-state of the high-side and low-side switch of the same inverter phase. A minimum deadtime insertion of typically 300ns is also provided by driver IC, in order to reduce cross-conduction of the external power switches.

### $V_{DDX}$, $V_{SS}$ (Low side control supply and reference)

$V_{DD}$ is the control supply and it provides power both to input logic and to the output power stage. Input logic is referenced to $V_{SS}$ ground.

The under-voltage circuit enables the device to operate at power on when a supply voltage of at least a typical voltage of $V_{DDUV+}$ = 11.1V is present.

The IC shuts down all the gate drivers power outputs, when the $V_{DD}$ supply voltage is below $V_{DDUV-}$ = 10.9V. This prevents the external power switches from critically low gate voltage levels during on-state and therefore from excessive power dissipation.

### $V_B$ (U,V,W) and $V_S$ (U,V,W) (High side supplies)

$V_B$ to $V_S$ is the high side supply voltage. The high side circuit can float with respect to $V_{SS}$ following the external high side power device source voltage.

Due to the low power consumption, the floating driver stage is supplied by integrated bootstrap circuit.

The under-voltage detection operates with a rising supply threshold of typical $V_{BSUV+}$ = 11.1V and a falling threshold of $V_{BSUV-}$ = 10.9V.

VS(U,V,W) provide a high robustness against negative voltage in respect of $V_{SS}$. This ensures very stable designs even under rough conditions.

### NU, NV, NW (Low side emitters)

The low side emitters are available for current measurements of each phase leg. It is recommended to keep the connection to pin $V_{SS}$ as short as possible in order to avoid unnecessary inductive voltage drops.

### VTH (Thermistor output)

A UL certified NTC resistor is integrated in the module with one terminal of the chip connected to $V_{SS}$ and the other to VTH. When pulled up to a rail voltage such as $V_{DD}$ or 3.3V by a resistor, the VTH pin provides an analog voltage signal corresponding to the temperature of the thermistor.

### RFE (RCIN / Fault / Enable)

The RFE pin combines 3 functions in one pin: RCIN or RC-network based programmable fault clear timer, fault output and enable input.

The RFE pin is normally connected to an RC network on the PCB per the schematic in Figure 5. Under normal operating conditions, $R_{RCIN}$ pulls the RFE pin to 3.3V, thus enabling all the functions in the IPM. The microcontroller can pull this pin low to disable the IPM functionality. This is is the Enable function.

chanhvinh.com



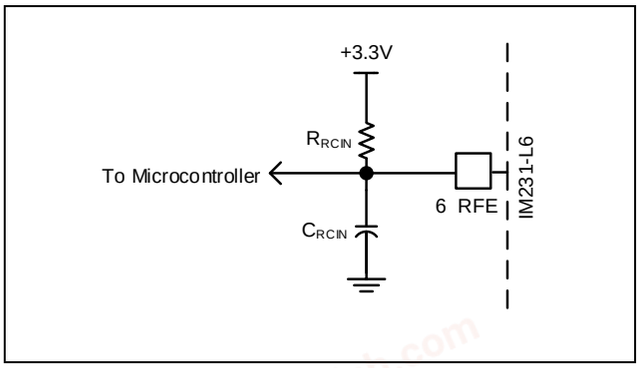


**Figure 5 Typical PCB circuit connected to the RFE pin**

The Fault function allows the IPM to report a Fault condition to the microncontroller by pulling the RFE pin low in one of two situations. The first is an under-voltage condition on $V_{DD}$ and the second is when the $I_{TRIP}$ pin sees a voltage rising above $V_{IT,TH+}$.

The programmable fault clear timer function provides a means of automatically re-enabling the module operation a preset amount of time ($T_{FLT-CLR}$) after the fault condition has disappeared. Figure 6 shows the RFE-related circuit block diagram inside the IPM.

The length of TFLT-CLR can be determined by using the formula below.

$V_{RFE}(t) = 3.3V * (1 – e^{-t/RC})$

$T_{FLT-CLR} = -R_{RCIN} * C_{RCIN} * \ln(1-V_{RFE+}/3.3V)$

For example, if $R_{RCIN}$ is 1.2MΩ and $C_{RCIN}$ is 1nF, the $T_{FLT-CLR}$ is about 1.7ms with $V_{RFE+}$ of 2.2V. It is also important to note that $C_{RCIN}$ needs to be minimized in order to make sure it is fully discharged in case of over current event.

Since the $I_{TRIP}$ pin has a 500ns input filter, it is appropriate to ensure that $C_{RCIN}$ will be discharged below $V_{RFE-}$ by the open-drain MOSFET, after 350ns. Therefore, the max $C_{RCIN}$ can be calculated as:

$V_{RFE}(t) = 3.3V * e^{-t/RC} < V_{RFE-}$

$C_{RCIN} < 350ns / ( - \ln (V_{RFE-} / 3.3V) * R_{RFE_ON})$

Consider $V_{RFE-}$ of 0.8V and $R_{RFE_ON}$ of 50ohm, $C_{RCIN}$ should be less than 5nF. It is also suggested to use a $R_{RCIN}$ of between 0.5MΩ and 2MΩ.

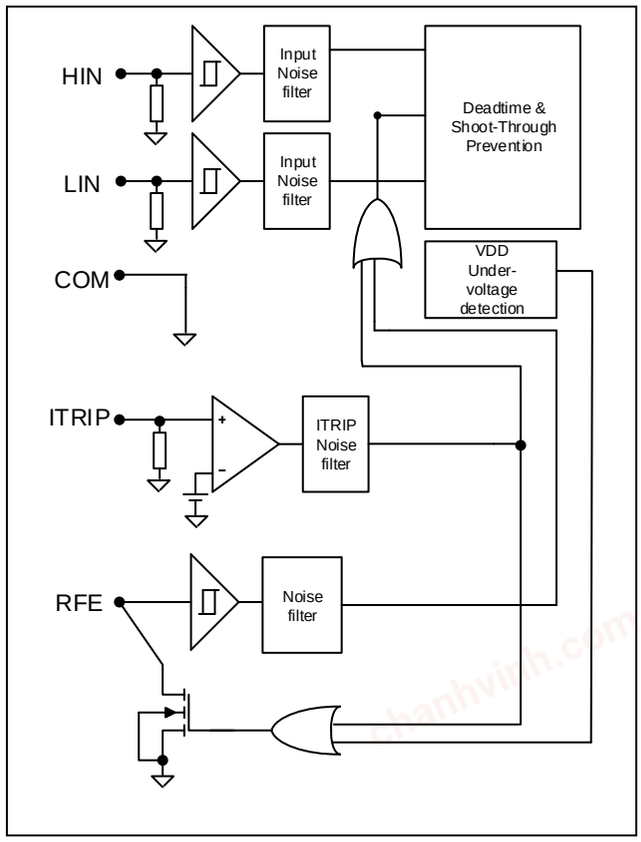


**Figure 6 RFE internal circuit structure**

**U/$V_S$(U) , V/$V_S$(V), W/$V_S$(W) (High side emitter and low side collector)**

These pins are connected to motor U, V, W input pins.

**P (Positive bus input voltage)**

The high side IGBTs are connected to the bus voltage. It is noted that the bus voltage should not exceed 450V.

chanhvinh.com



# 3 Absolute Maximum Rating

## 3.1 Module

**Table 3**

| Parameter | Symbol | Condition | | Units |
|---|---|---|---|---|
| Storage temperature | $T_{STG}$ | | -40 ~ 150 | °C |
| Operating case temperature | $T_C$ | | -40 ~ 125 | °C |
| Operating junction temperature | $T_J$ | | -40 ~ 150 | °C |
| Isolation test voltage | $V_{ISO}$ | 1min, RMS, f = 60Hz | 2000 | V |

## 3.2 Inverter

**Table 4 IM241-S6**

| Parameter | Symbol | Condition | | Units |
|---|---|---|---|---|
| Max. blocking voltage | $V_{CES}/V_{RRM}$ | | 600 | V |
| Output current | $I_O$ | $T_C$ = 25°C | 2 | A |
| Peak output current | $I_{OP}$ | $T_C$ = 25°C, $t_p$ < 1ms | 3 | A |
| Peak power dissipation per IGBT | $P_{tot}$ | $T_C$ = 25°C | 9 | W |
| Short circuit withstand time | $T_{SC}$ | $V_{DD}$=15V, $V_{DC}$ ≤400V, $T_J$=150°C<br>Allowed number of short circuits: <1000, time between short circuit: ≥ 1s | 3 | µs |

## 3.3 Control

**Table 5**

| Parameter | Symbol | Condition | | Units |
|---|---|---|---|---|
| Low side control supply voltage | $V_{DD}$ | | -0.3 ~ 20 | V |
| Input voltage | $V_{IN}$ | LIN, HIN,$I_{TRIP}$,RFE | -0.3 ~ $V_{DD}$ | V |
| High side floating supply voltage ($V_B$ reference to $V_S$) | $V_{BS}$ | | -0.3 ~ 20 | V |

chanhvinh.com



# 4 Thermal Characteristics

**Table 6 IM241-S6**

| Parameter | Symbol | Conditions | Min. | Typ. | Max. | Units |
|---|---|---|---|---|---|---|
| Single IGBT thermal resistance, junction-case | $R_{TH(J-C)}$ | Low side V-phase IGBT | - | 11.3 | 13.6 | K/W |
| Single diode thermal resistance, junction-case | $R_{TH(J-C)}$ | Low side V-phase Diode | - | 12.8 | 15.4 | K/W |

chanhvinh.com



# 5 Recommended Operating Conditions

**Table 7**

| Parameter | Symbol | Min. | Typ. | Max. | Units |
|---|---|---|---|---|---|
| Positive DC bus input voltage | P | - | - | 450 | V |
| Low side control supply voltage | $V_{DD}$ | 13.5 | - | 16.5 | V |
| High side floating supply voltage | $V_{BS}$ | 12.5 | - | 17.5 | V |
| Input voltage ($L_{IN}$,$H_{IN}$,$I_{TRIP}$,RFE) | $V_{IN}$ | 0 | - | 5 | V |
| PWM carrier frequency | $F_{PWM}$ | - | 20 | - | kHz |
| External dead time between $H_{IN}$ & $L_{IN}$ | DT | 1 | - | - | µs |
| Voltage between $V_{SS}$ and N(U,V,W) | $V_{COMP}$ | -5 | - | 5 | V |
| Minimum input pulse width | $PW_{IN(ON)}$, $PW_{IN(OFF)}$ | 1 | - | - | µs |

chanhvinh.com



# 6 Static Parameters

## 6.1 Inverter

($V_{DD}$-$V_{SS}$) = ($V_B$ - $V_S$) = 15 V. $T_C$ = 25°C unless otherwise specified.

**Table 8 IM241-S6 (B and J type)**

| Parameter | Symbol | Conditions | Min. | Typ. | Max. | Units |
|---|---|---|---|---|---|---|
| Collector-to-emitter saturation voltage | $V_{CE(sat)}$ | $I_C$ = 0.2A | - | 1.18 | - | V |
| | | $I_C$ = 0.5A | - | 1.55 | 1.78 | V |
| | | $I_C$ = 0.5A, $T_J$ = 150°C | - | 1.58 | - | V |
| Collector emitter leakage current of high side IGBT | $I_{LKH}$ | $V_{IN}$ = 0V, V+ = 600V | - | - | 80 | µA |
| | | $V_{IN}$ = 0V, V+ = 600V, $T_J$ = 150°C | - | 10.7 | - | µA |
| Diode forward voltage | $V_F$ | $I_C$ = 0.2A | - | 1.23 | - | V |
| | | $I_C$ = 0.5A | - | 1.53 | 1.77 | V |
| | | $I_C$ = 0.5A, $T_J$ = 150°C | - | 1.49 | - | V |

## 6.2 Control

($V_{DD}$- $V_{SS}$) = ($V_B$ - $V_S$) = 15 V. $T_C$ = 25°C unless otherwise specified. The $V_{IN}$ and $I_{IN}$ parameters are referenced to $V_{SS}$ and are applicable to all six channels. The $V_{DDUV}$ parameters are referenced to $V_{SS}$. The $V_{BSUV}$ parameters are referenced to VS.

**Table 9**

| Parameter | Symbol | Min. | Typ. | Max. | Units |
|---|---|---|---|---|---|
| Logic "1" input voltage (LIN, HIN) | $V_{IN,TH+}$ | 2.2 | - | - | V |
| Logic "0" input voltage (LIN, HIN) | $V_{IN,TH-}$ | - | - | 0.8 | V |
| $V_{DD}$/$V_{BS}$ supply undervoltage, positive going threshold | $V_{DD,UV+}$, $V_{BS,UV+}$ | 10.6 | 11.1 | 11.6 | V |
| $V_{DD}$/$V_{BS}$ supply undervoltage, negative going threshold | $V_{DD,UV-}$, $V_{BS,UV-}$ | 10.4 | 10.9 | 11.4 | V |
| $V_{DD}$/$V_{BS}$ supply undervoltage lock-out hysteresis | $V_{DDUVH}$, $V_{BSUVH}$ | - | 0.2 | - | V |
| RFE positive going threshold | $V_{RFE+}$ | - | 1.9 | 2.2 | V |
| RFE negative going threshold | $V_{RFE-}$ | 0.8 | 1.1 | - | V |
| ITRIP positive going threshold | $V_{IT,TH+}$ | 0.475 | 0.500 | 0.525 | V |
| ITRIP negative going threshold | $V_{IT,TH-}$ | - | 0.430 | - | V |
| ITRIP input hysteresis | $V_{IT,HYS}$ | - | 0.07 | - | V |
| Quiescent $V_{BS}$ supply current | $I_{QBS}$ | - | - | 70 | µA |
| Quiescent $V_{DD}$ supply current per channel | $I_{QDD}$ | - | - | 3 | mA |
| Input bias current $V_{IN}$=5V for LIN, HIN | $I_{IN+}$ | - | 6.25 | 12.5 | µA |
| Input bias current $V_{IN}$=5V for RFE | $I_{IN,RFE+}$ | - | - | 1 | µA |

chanhvinh.com



Static Parameters

| Parameter | Symbol | Min. | Typ. | Max. | Units |
|---|---|---|---|---|---|
| Input bias current $V_{IN}$=5V for ITRIP | $I_{ITRIP+}$ | - | 5 | 20 | µA |
| Bootstrap resistance | $R_{BS}$ | - | 200 | - | Ω |
| RFE low on resistance | $R_{RFE}$ | - | 34 | 60 | Ω |

chanhvinh.com



# 7 Dynamic Parameters

## 7.1 Inverter

($V_{DD}$- $V_{SS}$) = ($V_B$ - $V_S$) = 15 V. $T_C$ = 25°C unless otherwise specified.

**Table 10 IM241-S6, B Type**

| Parameter | Symbol | Conditions | Min. | Typ. | Max. | Units |
|---|---|---|---|---|---|---|
| Input to output turn-on propagation delay | $T_{ON}$ | $I_C$ = 0.5A, V+ = 300V | - | 492 | - | ns |
| Turn-on rise time | $T_R$ | | - | 6.10 | - | ns |
| Turn-on switching time | $T_{C(on)}$ | | - | 49.7 | - | ns |
| Input to output turn-off propagation delay | $T_{OFF}$ | $I_C$ = 0.5A, V+ = 300V | - | 710 | - | ns |
| Turn-off fall time | $T_F$ | | - | 132 | - | ns |
| Turn-off switching time | $T_{C(off)}$ | | - | 124 | - | ns |
| RFE low to six switch turn-off propagation delay | $T_{EN}$ | $V_{IN}$=0 or $V_{IN}$=5V, $V_{RFE}$=5V | - | 420 | - | ns |
| ITRIP to six switch turn-off propagation delay | $T_{ITRIP}$ | V+ = 300V,no cap on RFE | - | 1.3 | - | µs |
| Turn-on slew rate | dV / dt | $I_C$ = 0.5A, V+ = 300V, $V_{DD}$ = 15V, L = 6mH, mean of high side and low side | - | 6.98 | - | V/ns |
| Turn-on switching energy | $E_{ON}$ | $I_C$ = 0.5A, V+ = 300V, $V_{DD}$ = 15V, L = 6mH, mean of high side and low side | - | 9.91 | - | µJ |
| Turn-off switching energy | $E_{OFF}$ | | - | 7.31 | - | |
| Diode reverse recovery energy | $E_{REC}$ | | - | 7.56 | - | |
| Diode reverse recovery time | $T_{RR}$ | | - | 71.8 | - | ns |
| Turn-on switching energy | $E_{ON}$ | $I_C$ = 0.5A, V+ = 300V, $V_{DD}$ = 15V, L = 6mH $T_J$ = 150°C, mean of high side and low side | - | 18.6 | - | µJ |
| Turn-off switching energy | $E_{OFF}$ | | - | 10.8 | - | |
| Diode reverse recovery energy | $E_{REC}$ | | - | 13.1 | - | |
| Diode reverse recovery time | $T_{RR}$ | | - | 116 | - | ns |

**Table 11 IM241-S6, J Type**

| Parameter | Symbol | Conditions | Min. | Typ. | Max. | Units |
|---|---|---|---|---|---|---|
| Input to output turn-on propagation delay | $T_{ON}$ | $I_C$ = 0.5A, V+ = 300V | - | 555 | - | ns |
| Turn-on rise time | $T_R$ | | - | 14.8 | - | ns |
| Turn-on switching time | $T_{C(on)}$ | | - | 160 | - | ns |
| Input to output turn-off propagation delay | $T_{OFF}$ | $I_C$ = 0.5A, V+ = 300V | - | 809 | - | ns |
| Turn-off fall time | $T_F$ | | - | 138 | - | ns |

chanhvinh.com



Dynamic Parameters

| Parameter | Symbol | Conditions | Min. | Typ. | Max. | Units |
|---|---|---|---|---|---|---|
| Turn-off switching time | $T_{C(off)}$ | | - | 126 | - | ns |
| RFE low to six switch turn-off propagation delay | $T_{EN}$ | $V_{IN}$=0 or $V_{IN}$=5V, $V_{RFE}$=5V | - | 470 | - | ns |
| ITRIP to six switch turn-off propagation delay | $T_{ITRIP}$ | V+ = 300V,no cap on RFE | - | 1.3 | - | µs |
| Turn-on slew rate | dV / dt | $I_C$ = 0.5A, V+ = 300V, $V_{DD}$ = 15V, L = 6mH, mean of high side and low side | - | 1.91 | - | V/ns |
| Turn-on switching energy | $E_{ON}$ | $I_C$ = 0.5A, V+ = 300V, $V_{DD}$ = 15V, L = 6mH, mean of high side and low side | - | 20.0 | - | µJ |
| Turn-off switching energy | $E_{OFF}$ | | - | 7.49 | - | |
| Diode reverse recovery energy | $E_{REC}$ | | - | 5.77 | - | |
| Diode reverse recovery time | $T_{RR}$ | | - | 164 | - | ns |
| Turn-on switching energy | $E_{ON}$ | $I_C$ = 0.5A, V+ = 300V, $V_{DD}$ = 15V, L = 6mH $T_J$ = 150°C, mean of high side and low side | - | 34.8 | - | µJ |
| Turn-off switching energy | $E_{OFF}$ | | - | 10.6 | - | |
| Diode reverse recovery energy | $E_{REC}$ | | - | 9.47 | - | |
| Diode reverse recovery time | $T_{RR}$ | | - | 258 | - | ns |

## 7.2 Control

($V_{DD}$- $V_{SS}$) = ($V_B$ - $V_S$) = 15V. $T_C$ = 25°C unless otherwise specified.

**Table 12**

| Parameter | Symbol | Conditions | Min. | Typ. | Max. | Units |
|---|---|---|---|---|---|---|
| Input filter time (HIN, LIN) | $T_{FIL,IN}$ | $V_{IN}$ = 0 or $V_{IN}$ = 5V | - | 300 | - | ns |
| Input filter time (ITRIP) | $T_{FIL,ITRIP}$ | $V_{IN}$=0 or $V_{IN}$=5V | - | 500 | - | ns |
| Internal dead time | $DT_{IC}$ | $V_{IN}$ = 0 or $V_{IN}$ = 5V | - | 300 | - | ns |
| Matching propagation delay time (on and off) for same phase high-side and low-side | $M_T$ | External dead time > 500ns | - | - | 50 | ns |

chanhvinh.com



# 8 Thermistor Characteristics

**Table 13**

| Parameter | Symbol | Conditions | Min. | Typ. | Max. | Units |
|---|---|---|---|---|---|---|
| Resistance | $R_{25}$ | $T_C$ = 25°C, ±5% tolerance | 44.65 | 47 | 49.35 | kΩ |
| Resistance | $R_{125}$ | $T_C$ = 125°C | 1.27 | 1.39 | 1.51 | kΩ |
| B-constant (25/100) | B | ±1% tolerance | - | 4006 | - | K |
| Temperature Range | | | -20 | - | 150 | °C |

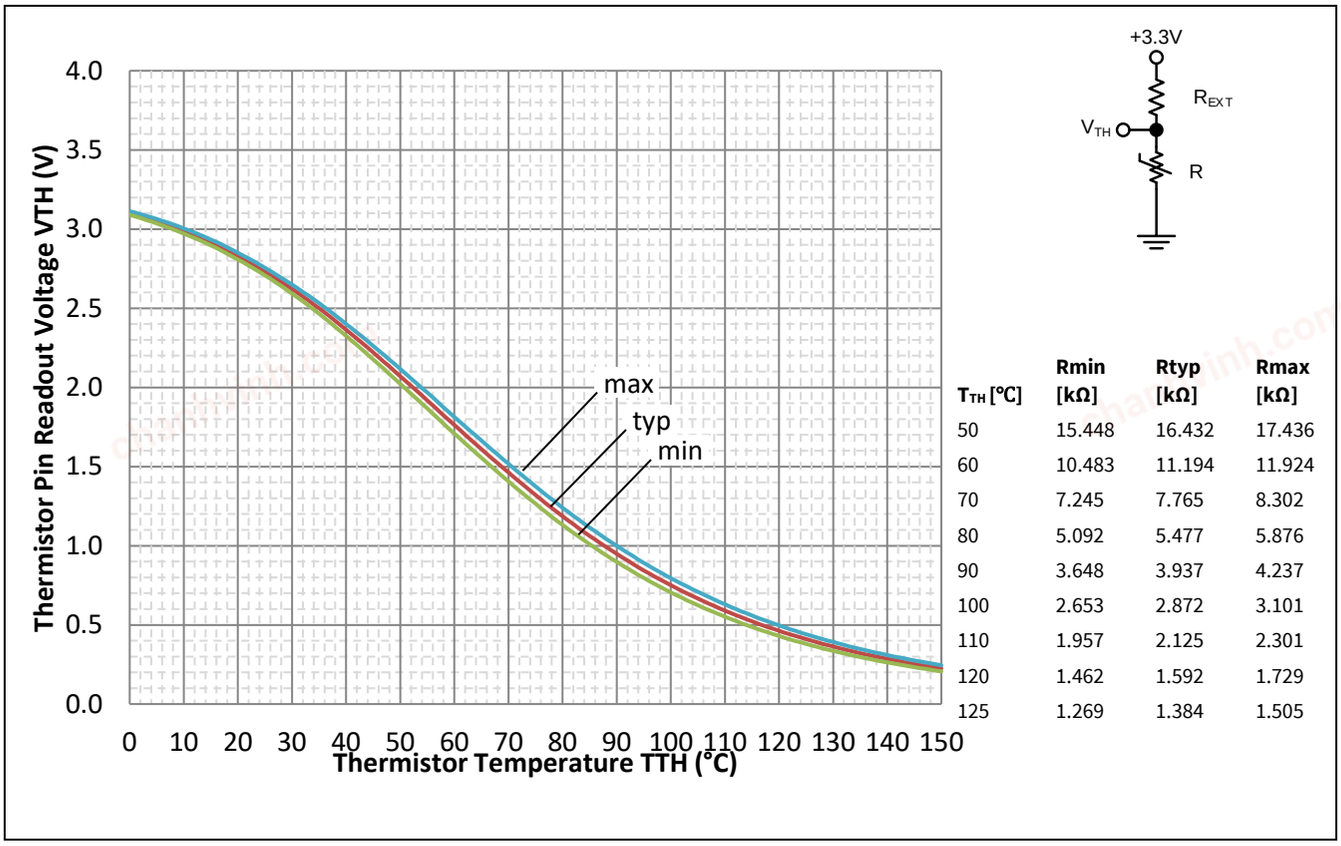


| $T_{TH}$ [°C] | Rmin [kΩ] | Rtyp [kΩ] | Rmax [kΩ] |
|---|---|---|---|
| 50 | 15.448 | 16.432 | 17.436 |
| 60 | 10.483 | 11.194 | 11.924 |
| 70 | 7.245 | 7.765 | 8.302 |
| 80 | 5.092 | 5.477 | 5.876 |
| 90 | 3.648 | 3.937 | 4.237 |
| 100 | 2.653 | 2.872 | 3.101 |
| 110 | 1.957 | 2.125 | 2.301 |
| 120 | 1.462 | 1.592 | 1.729 |
| 125 | 1.269 | 1.384 | 1.505 |

**Figure 7** **Thermistor resistance – temperature curve, for $R_{EXT}$=9.76kΩ, and thermistor resistance variation with temperature.**

chanhvinh.com



# 9 Mechanical Characteristics and Ratings

**Table 14**

| Parameter | Symbol | Conditions | Min. | Typ. | Max. | Units |
|---|---|---|---|---|---|---|
| Comparative Tracking Index | CTI | | 550 | - | - | V |
| Curvature of module backside | BC | See Figure 9 | -50 | - | 50 | µm |
| Mounting Torque | T | M3 screw & washer, thermal grease | 0.4 | 0.8 | 1.2 | Nm |
| | | M3 screw & washer, SIL-PAD 1500ST | - | 0.6 | 1.0 | Nm |
| Weight | W | | - | 3 | - | g |

chanhvinh.com



# 10 Qualification Information

**Table 15**

| | | |
|---|---|---|
| **UL Certification** | UL-US-L252584-15-22508102-2 | |
| **Moisture sensitivity level (SOP 29 x 12 only)** | MSL3 | |
| **RoHS Compliant** | Yes | |
| **ESD** | Human body model | 1C |
| | Charge discharge model | C3 |

chanhvinh.com



# 11 Diagrams & Tables

## 11.1 $T_C$ Measurement Point

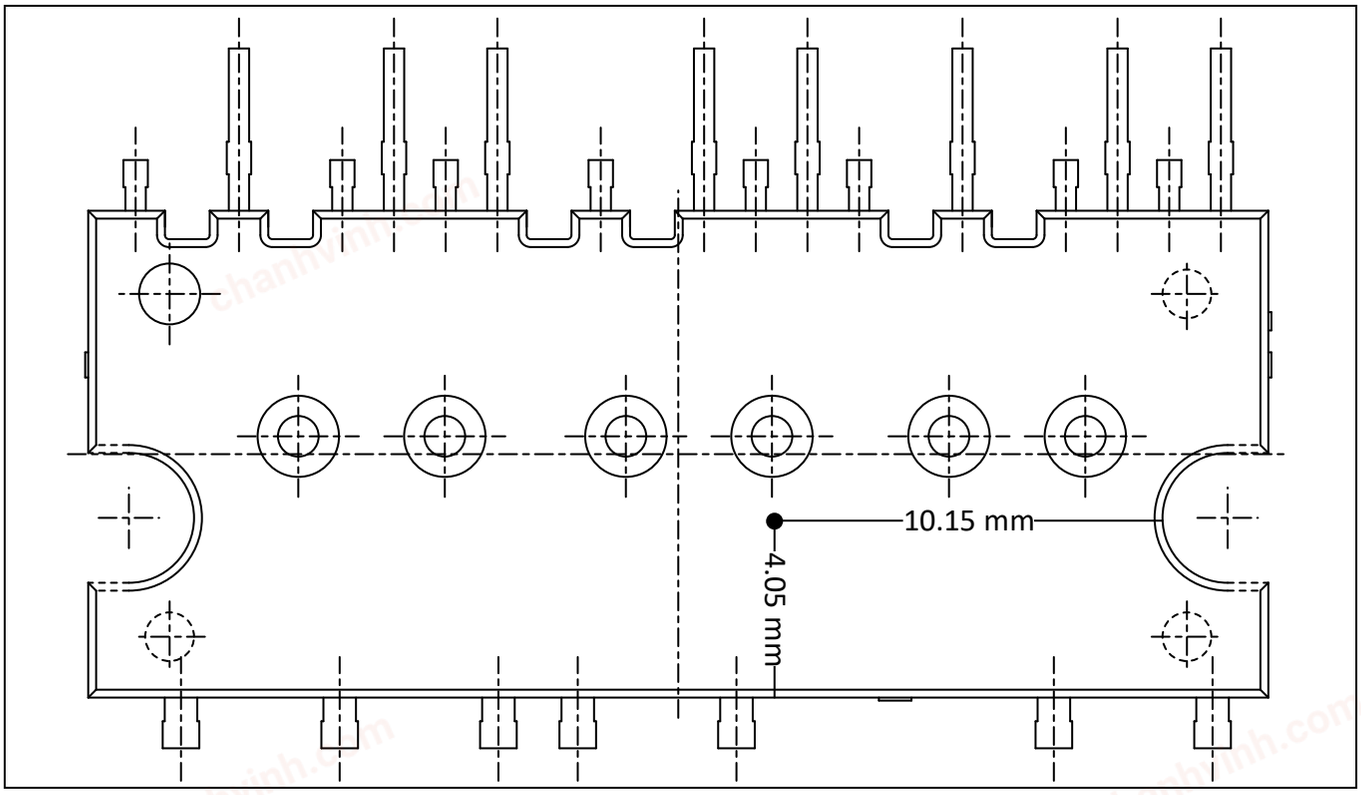


**Figure 8 $T_C$ measurement point**

## 11.2 Backside Curvature Measurement Points

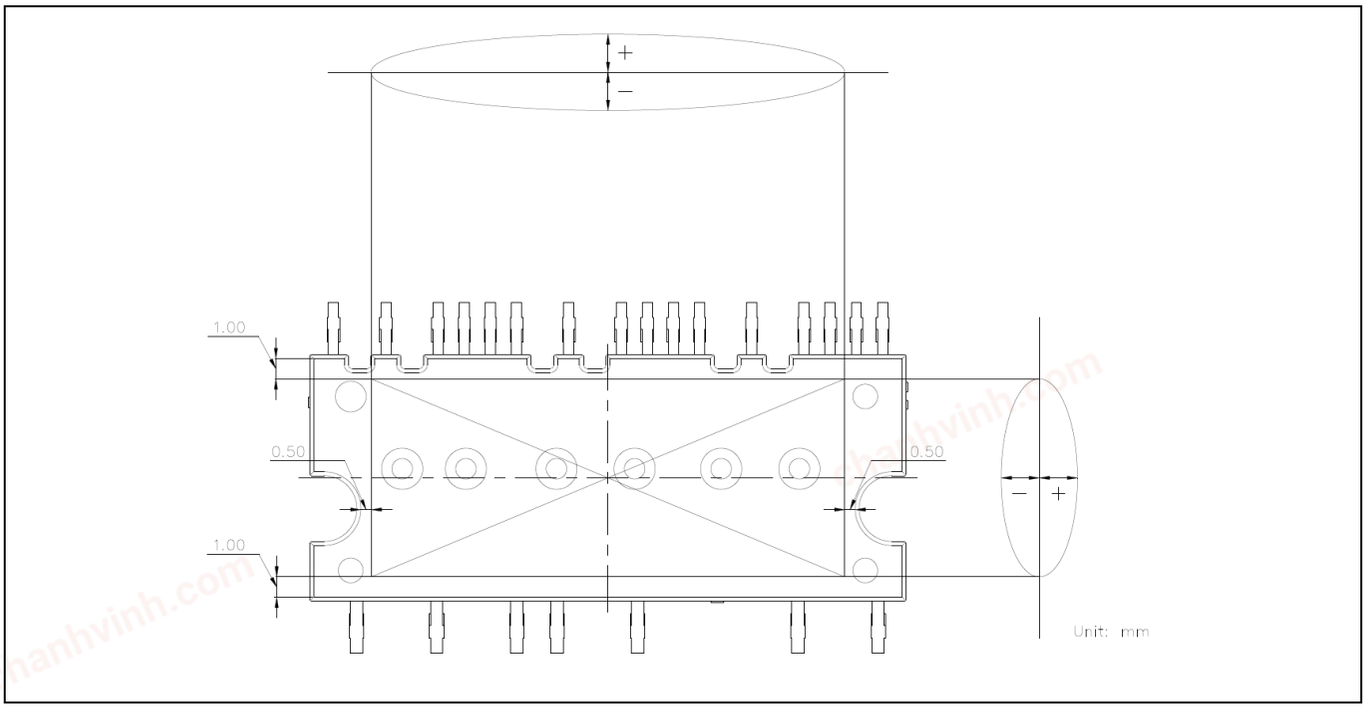


**Figure 9 Curvature measurement points**

chanhvinh.com



## 11.3 Input-Output Logic Table

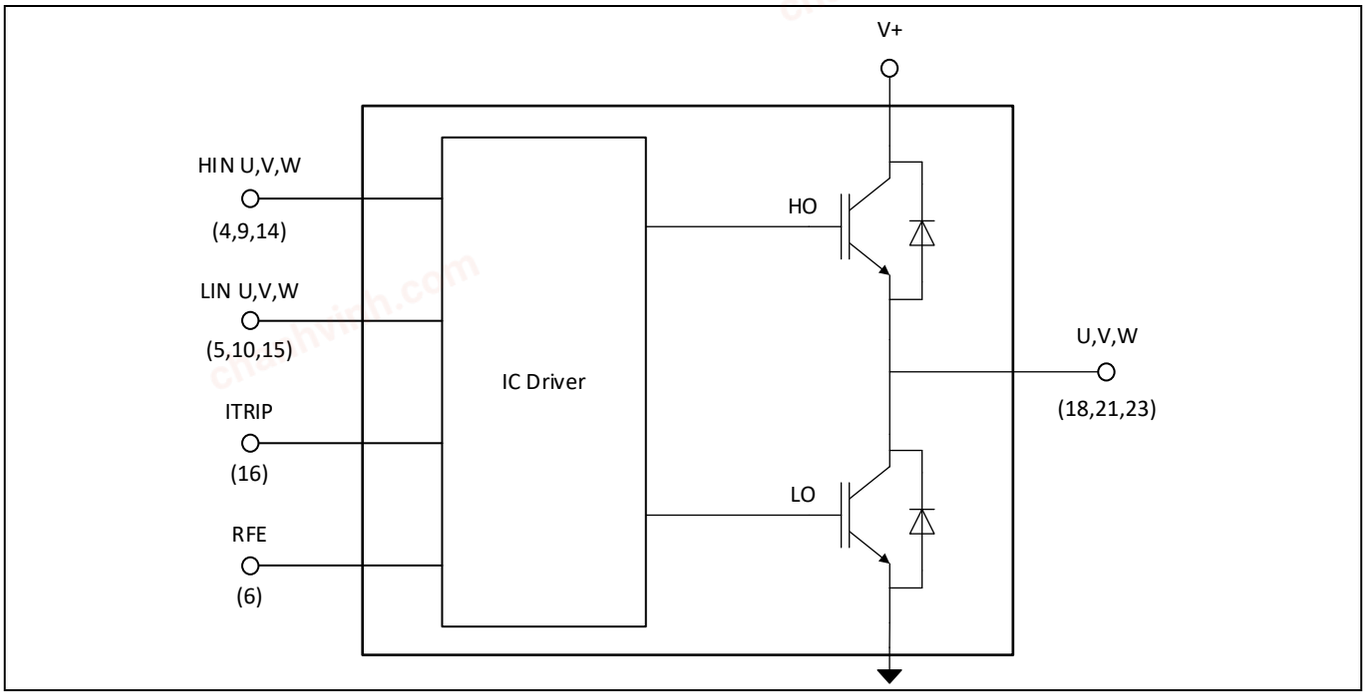


**Figure 10 Module block diagram**

**Table 16**

| RFE | ITRIP | HIN U,V,W | LIN U,V,W | U,V,W |
|---|---|---|---|---|
| 1 | 0 | 1 | 0 | V+ |
| 1 | 0 | 0 | 1 | 0 |
| 1 | 0 | 0 | 0 | ‡ |
| 1 | 0 | 1 | 1 | ‡ |
| 1 | 1 | x | x | ‡ |
| 0 | x | x | x | ‡ |

‡ Voltage depends on direction of phase current

chanhvinh.com



## 11.4 Switching Time Definitions

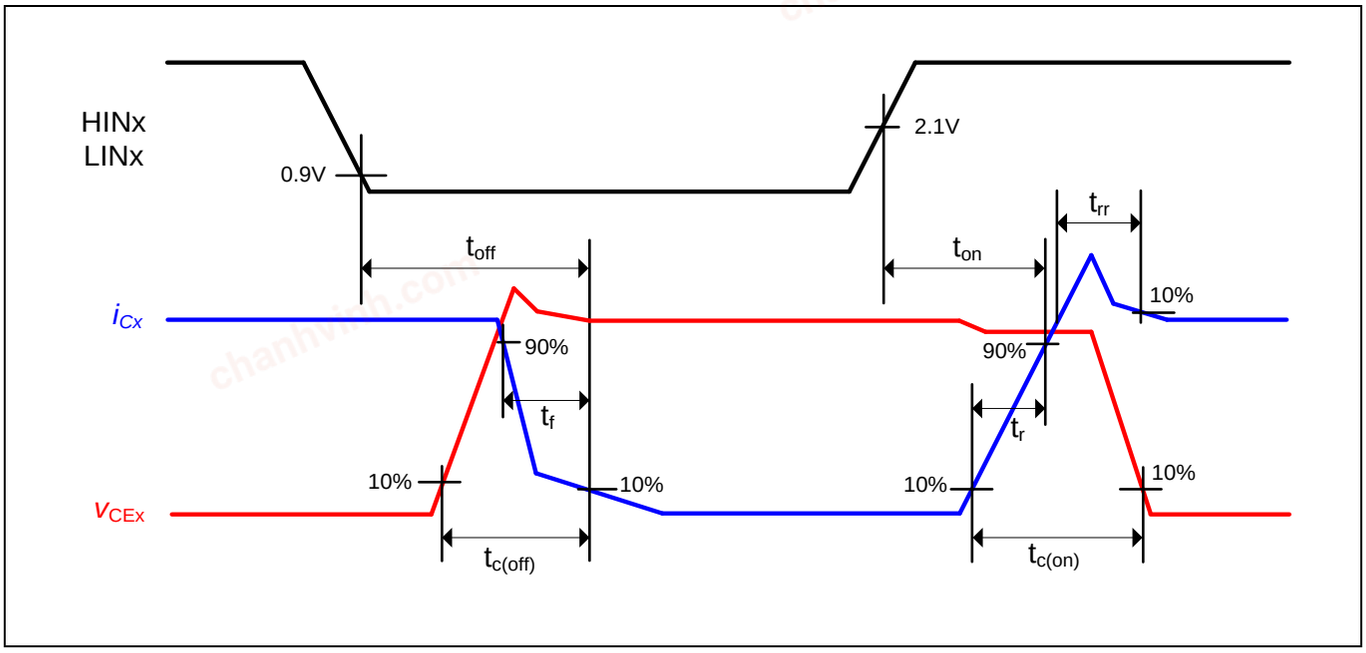


**Figure 11 Switching times definition**

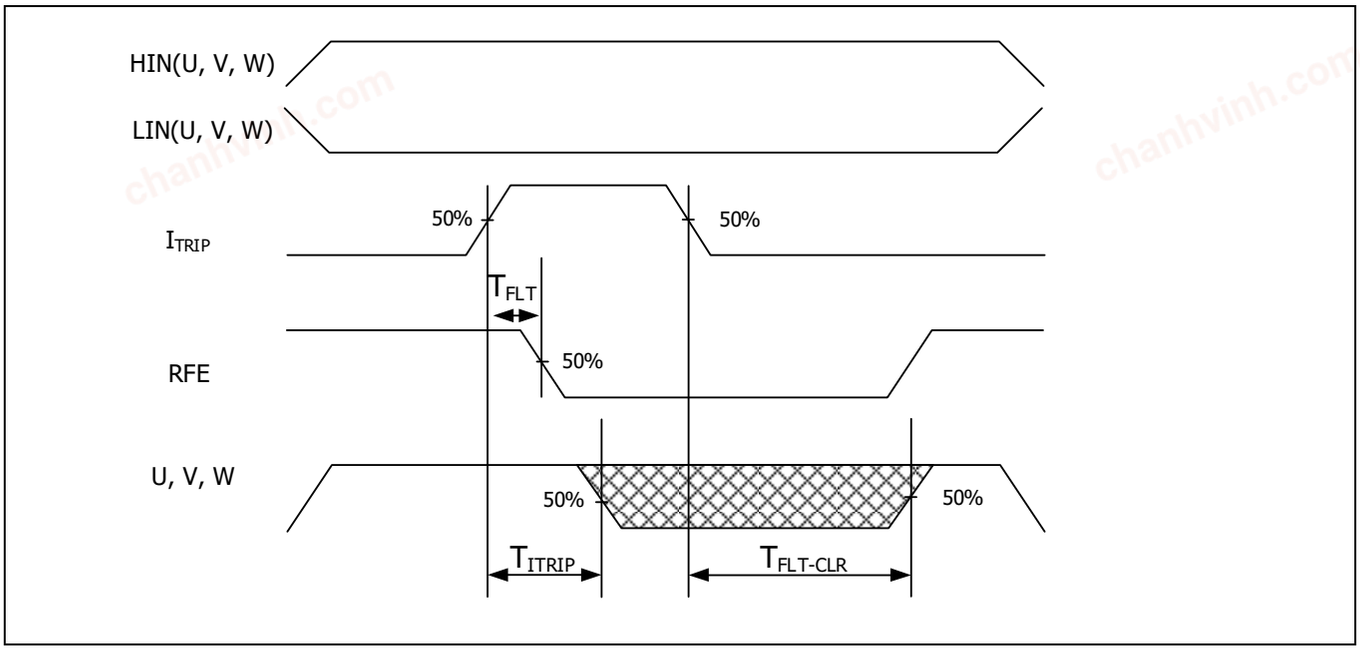


**Figure 12 ITRIP time waveform**

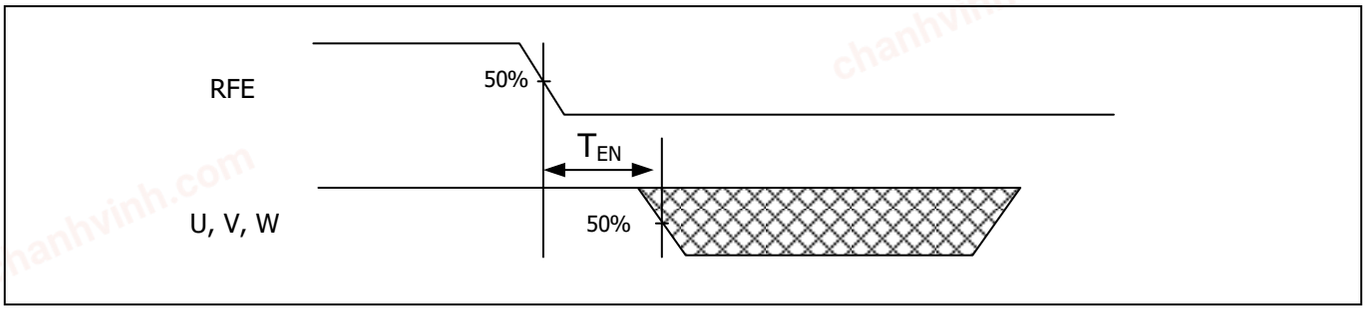


**Figure 13 Output disable timing diagram**

chanhvinh.com



# 12 Application Guide

## 12.1 Typical Application Schematic

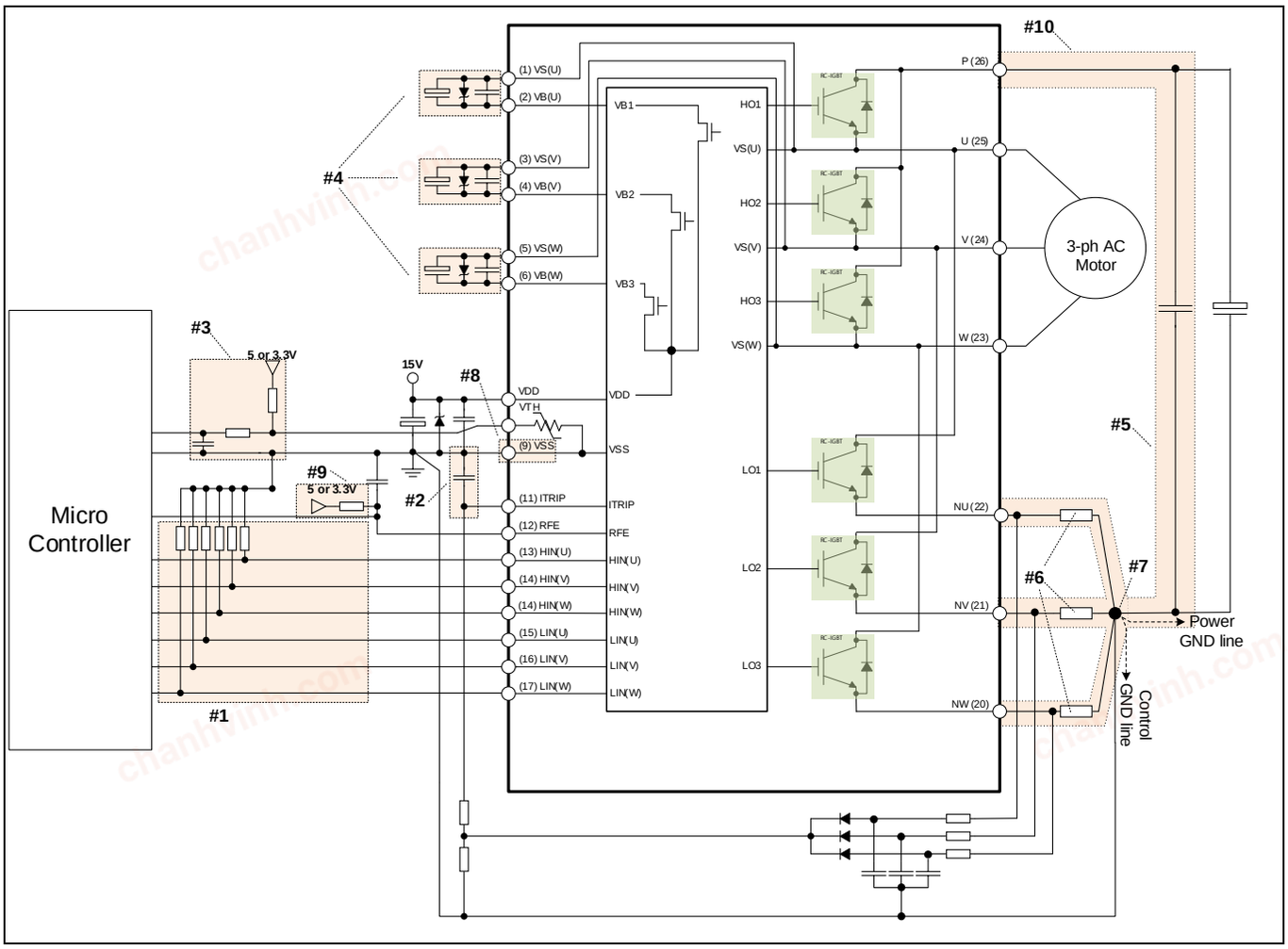


**Figure 14 Application schematic**

chanhvinh.com



## 12.2 $T_J$ vs $T_{TH}$

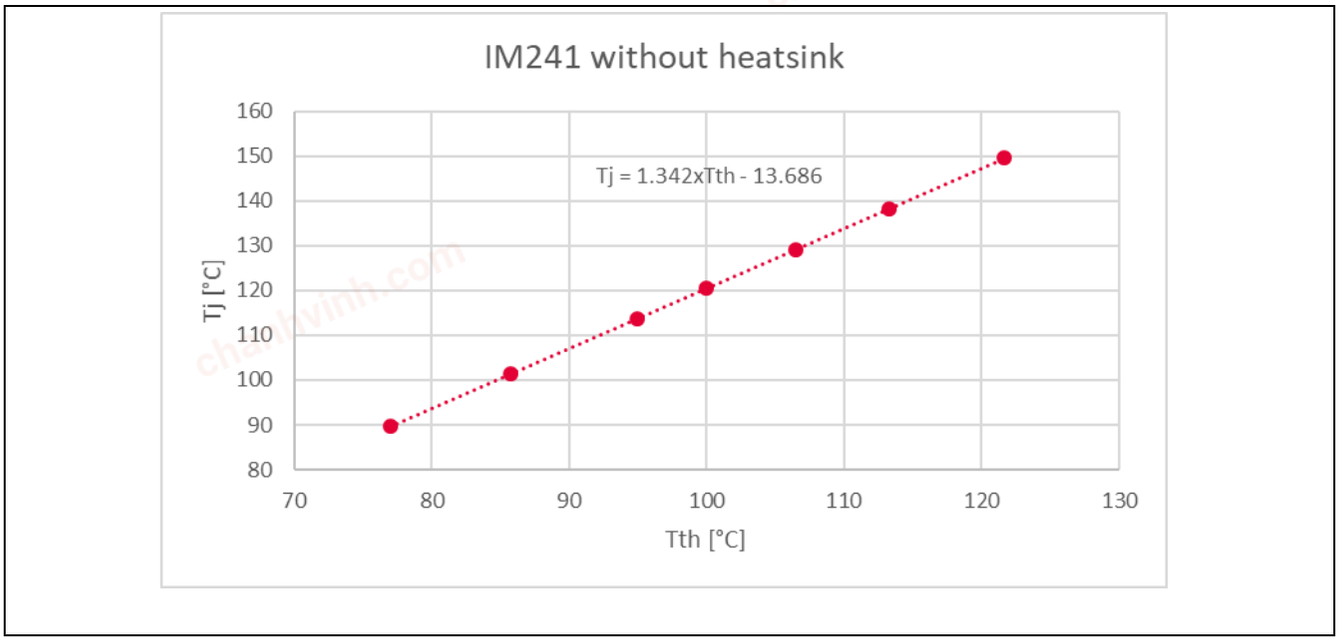


**Figure 15 Typical $T_J$ vs $T_{TH}$ correlation without heatsink (AN-2021-08 for reference)**

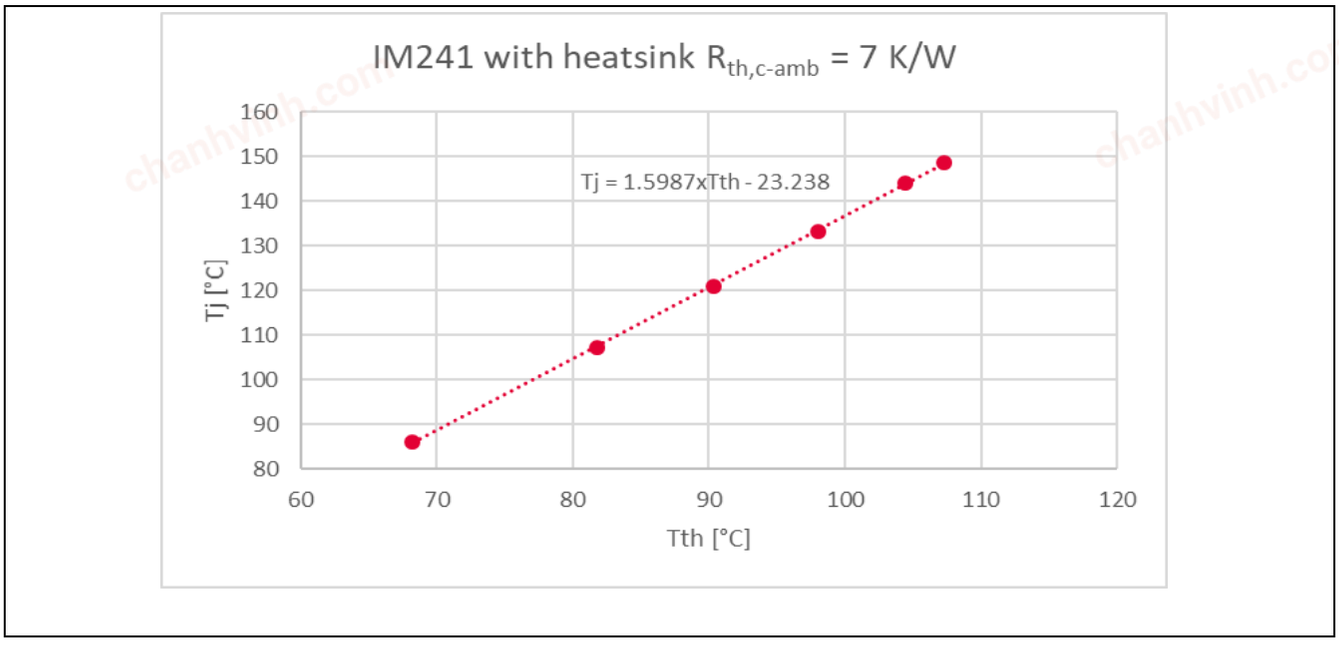


**Figure 16 Typical $T_J$ vs $T_{TH}$ correlation with heatsink and $Rth_{c\text{-}amb}$ = 7 K/W (AN-2021-08 for reference)**

chanhvinh.com



## 12.3 –$V_S$ Immunity

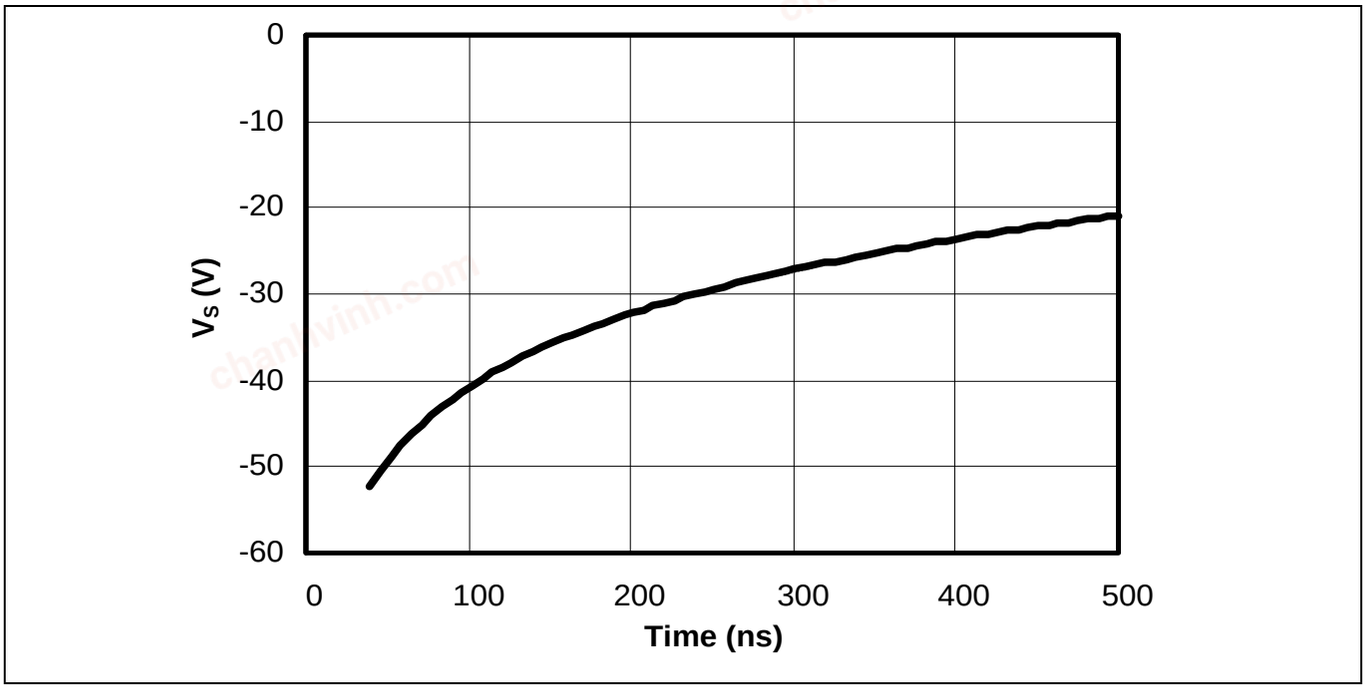


**Figure 17 Negative transient $V_s$ SOA for integrated gate driver**

chanhvinh.com



# 13 Package Outline

## 13.1 DIP 29x12

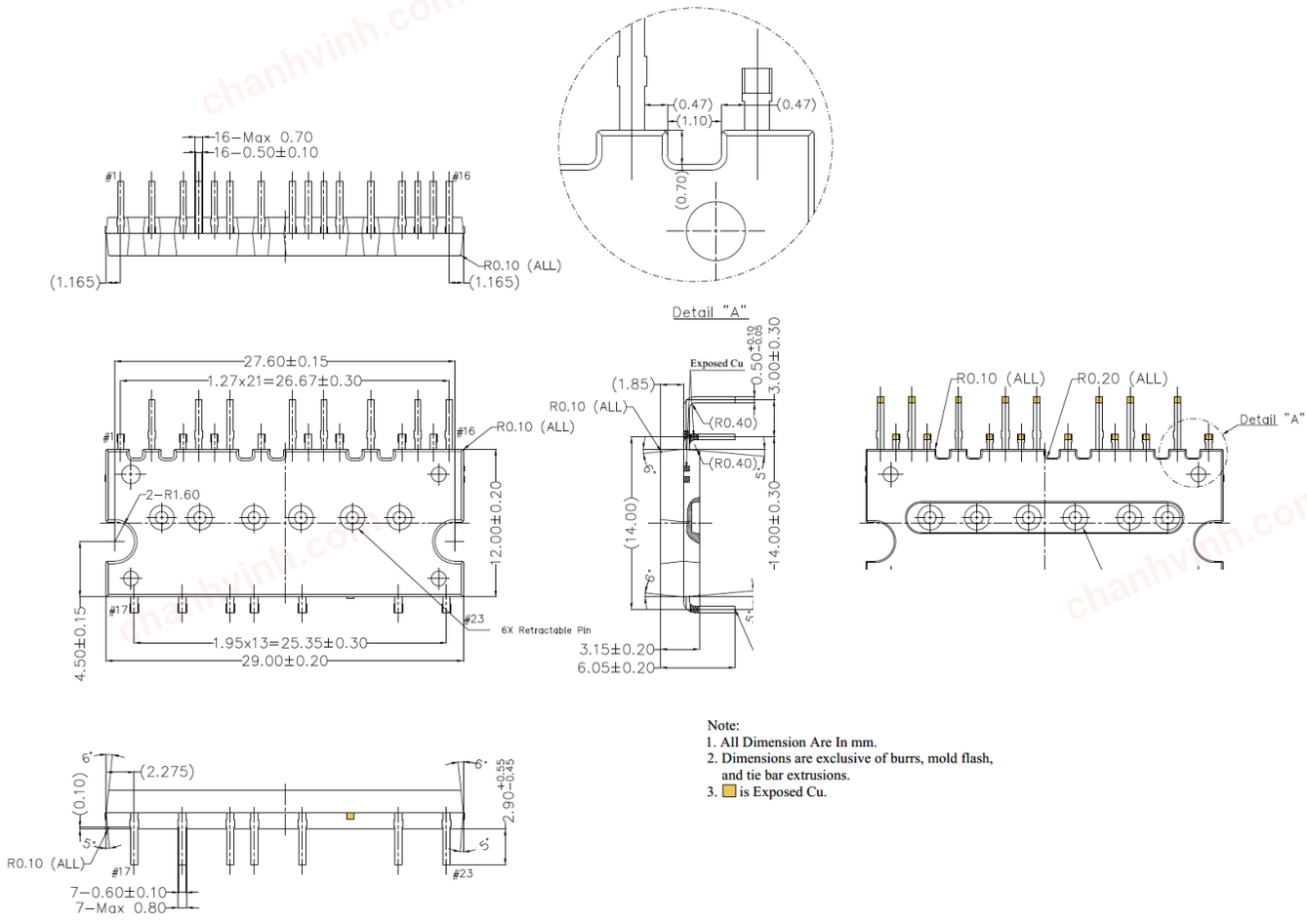


Note:
1. All Dimension Are In mm.
2. Dimensions are exclusive of burrs, mold flash, and tie bar extrusions.
3. ▨ is Exposed Cu.

Dimensions in mm

chanhvinh.com



## 13.2 SOP 29x12

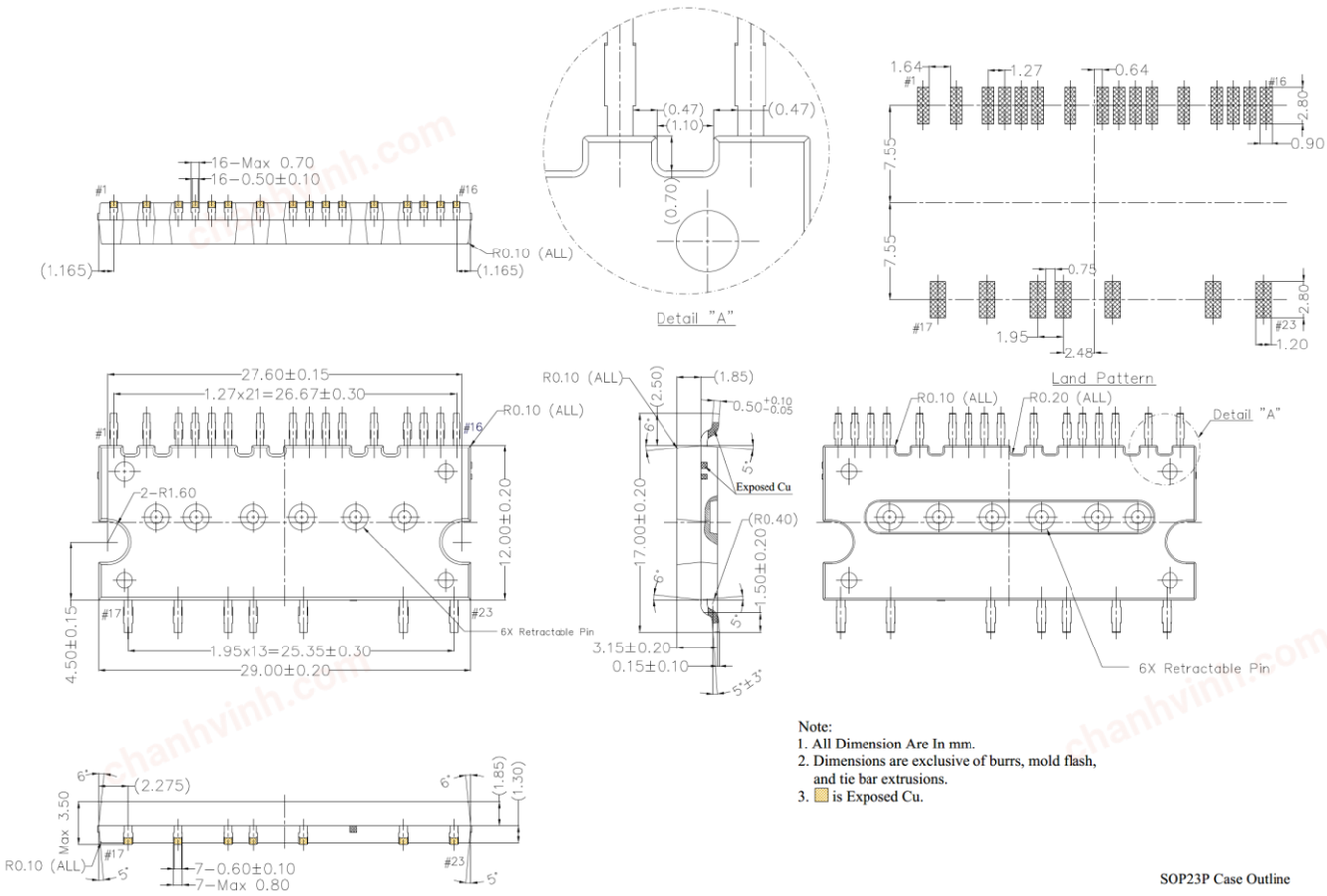


Note:
1. All Dimension Are In mm.
2. Dimensions are exclusive of burrs, mold flash, and tie bar extrusions.
3. ▨ is Exposed Cu.

SOP23P Case Outline

Dimensions in mm

chanhvinh.com



# 14 Revision History

**Major changes since the last revision**

| Page or Reference | Description of change |
|---|---|
| | |
| | |
| | |

chanhvinh.com

chanhvinh.com

**Trademarks**
All referenced product or service names and trademarks are the property of their respective owners.

**Edition 2022-06-26**

**Published by**

**Infineon Technologies AG**

**81726 München, Germany**

**© 2022 Infineon Technologies AG. All Rights Reserved.**

**Do you have a question about this document?**

**Email:** erratum@infineon.com

**Document reference**

**IMPORTANT NOTICE**

The information given in this document shall in no event be regarded as a guarantee of conditions or characteristics ("Beschaffenheitsgarantie") .

With respect to any examples, hints or any typical values stated herein and/or any information regarding the application of the product, Infineon Technologies hereby disclaims any and all warranties and liabilities of any kind, including without limitation warranties of non-infringement of intellectual property rights of any third party.

In addition, any information given in this document is subject to customer's compliance with its obligations stated in this document and any applicable legal requirements, norms and standards concerning customer's products and any use of the product of Infineon Technologies in customer's applications.

The data contained in this document is exclusively intended for technically trained staff. It is the responsibility of customer's technical departments to evaluate the suitability of the product for the intended application and the completeness of the product information given in this document with respect to such application.

For further information on the product, technology delivery terms and conditions and prices please contact your nearest Infineon Technologies office (**www.infineon.com**).

**WARNINGS**

Due to technical requirements products may contain dangerous substances. For information on the types in question please contact your nearest Infineon Technologies office.

Except as otherwise explicitly approved by Infineon Technologies in a written document signed by authorized representatives of Infineon Technologies, Infineon Technologies' products may not be used in any applications where a failure of the product or any consequences of the use thereof can reasonably be expected to result in personal injury.