chanhvinh.com

Smart Sense High-Side Power Switch

RoHS

AEC Qualified

Features

- Short circuit protection
- Current limitation
- Proportional load current sense
- CMOS compatible input
- Open drain diagnostic output
- Fast demagnetization of inductive loads
- Undervoltage and overvoltage shutdown with auto-restart and hysteresis
- Overload protection
- Thermal shutdown
- Overvoltage protection including load dump (with external GND-resistor)
- Reverse battery protection (with external GND-resistor)
- Loss of ground and loss of V_{bb} protection
- **E**lectro**s**tatic **d**ischarge (**ESD**) protection

Product Summary

Operating voltage	$V_{bb(on)}$	5.0 ... 34	V
On-state resistance	R_{ON}	30	mΩ
Load current (ISO)	$I_{L(ISO)}$	12.6	A
Current limitation	$I_{L(SCr)}$	24	A

Package

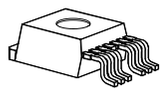

1
SMD

- AEC qualified
- Green product (RoHS compliant)

Application

- µC compatible power switch with diagnostic feedback for 12 V and 24 V DC grounded loads
- All types of resistive, inductive and capacitve loads
- Replaces electromechanical relays, fuses and discrete circuits

General Description

N channel vertical power FET with charge pump, ground referenced CMOS compatible input and diagnostic feedback, proportional sense of load current, monolithically integrated in Smart SIPMOS® technology. Providing embedded protective functions.

Block Diagram

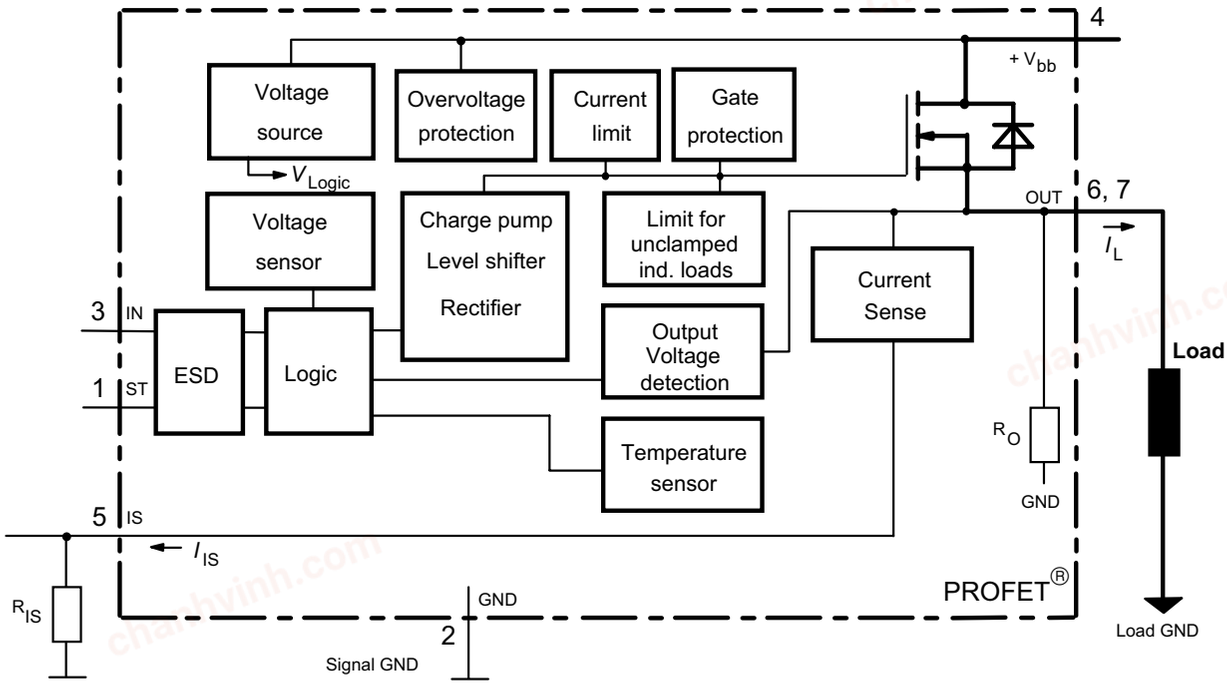

chanhvinh.com

Pin	Symbol	Function
1	ST	Diagnostic feedback: open drain, invers to input level
2	GND	Logic ground
3	IN	Input, activates the power switch in case of logical high signal
4	Vbb	Positive power supply voltage, the tab is shorted to this pin
5	IS	Sense current output, proportional to the load current, zero in the case of current limitation of load current
6 & 7	OUT (Load, L)	Output, protected high-side power output to the load. Both output pins have to be connected in parallel for operation according this spec (e.g. k_{ILIS}). Design the wiring for the max. short circuit current

Maximum Ratings at T_j = 25 °C unless otherwise specified

Parameter	Symbol	Values	Unit
Supply voltage (overvoltage protection see page 4)	V_{bb}	43	V
Supply voltage for full short circuit protection T_j Start=-40 ...+150°C	V_{bb}	34	V
Load dump protection[1] $V_{LoadDump} = V_A + V_S$, V_A = 13.5V R_I[2]= 2 Ω, R_L= 1 Ω, t_d= 200 ms, IN= low or high	$V_{Load\ dump}$[3]	60	V
Load current (Short circuit current, see page 5)	I_L	self-limited	A
Operating temperature range Storage temperature range	T_j T_{stg}	-40 ...+150 -55 ...+150	°C
Power dissipation (DC), $T_C \le 25$ °C	P_{tot}	85	W
Inductive load switch-off energy dissipation, single pulse V_{bb} = 12V, $T_{j,start}$ = 150°C, T_C = 150°C const. I_L = 12.6 A, Z_L = 4,2 mH, 0 Ω: I_L = 4 A, Z_L = 330 mH, 0 Ω:	 E_{AS} E_{AS}	 0,41 3,5	 J
Electrostatic discharge capability (ESD) IN: (Human Body Model) ST, IS: out to all other pins shorted: acc. MIL-STD883D, method 3015.7 and ESD assn. std. S5.1-1993 R=1.5kΩ; C=100pF	V_{ESD}	1.0 4.0 8.0	kV
Input voltage (DC)	V_{IN}	-10 ... +16	V
Current through input pin (DC) Current through status pin (DC) Current through current sense pin (DC) see internal circuit diagrams page 8	I_{IN} I_{ST} I_{IS}	±2.0 ±5.0 ±14	mA

1) Supply voltages higher than $V_{bb(AZ)}$ require an external current limit for the GND and status pins (a 150 Ω resistor in the GND connection is recommended).

2) R_I = internal resistance of the load dump test pulse generator

3) $V_{Load\ dump}$ is setup without the DUT connected to the generator according to ISO 7637-1 and DIN 40839

chanhvinh.com

Thermal Characteristics

Parameter and Conditions	Symbol	Values			Unit
		min	typ	max	
Thermal resistance chip - case:	R_{thJC}	--	--	1.47	K/W
junction - ambient (free air):	R_{thJA}	--	--	75	
SMD version, device on PCB[4]:		--	33	--	

Electrical Characteristics

Parameter and Conditions at T_j = 25 °C, V_{bb} = 12 V unless otherwise specified	Symbol	Values			Unit
		min	typ	max	
Load Switching Capabilities and Characteristics					
On-state resistance (pin 4 to 6&7) I_L = 5 A T_j=25 °C: T_j=150 °C:	R_{ON}	--	27 54	30 60	mΩ
Output voltage drop limitation at small load currents (pin 4 to 6&7), see page 14 I_L = 0.5 A T_j =-40...+150°C:	$V_{ON(NL)}$	--	50	--	mV
Nominal load current, ISO Norm (pin 4 to 6&7) V_{ON} = 0.5 V, T_C = 85 °C	$I_{L(ISO)}$	11.4	12.6	--	A
Nominal load current, device on PCB[4] T_A = 85 °C, T_j ≤ 150 °C V_{ON} ≤ 0.5 V,	$I_{L(NOM)}$	4.0	4.5	--	A
Output current (pin 6&7) while GND disconnected or GND pulled up, V_{bb}=30 V, V_{IN}= 0, see diagram page 9; not subject to production test, specified by design	$I_{L(GNDhigh)}$	--	--	8	mA
Turn-on time IN ⌐ to 90% V_{OUT}: Turn-off time IN ⌙ to 10% V_{OUT}: R_L = 12 Ω, T_j =-40...+150°C	t_{on} t_{off}	25 25	70 80	150 200	µs
Slew rate on 10 to 30% V_{OUT}, R_L = 12 Ω, T_j =-40...+150°C	dV/dt_{on}	0.1	--	1	V/µs
Slew rate off 70 to 40% V_{OUT}, R_L = 12 Ω, T_j =-40...+150°C	$-dV/dt_{off}$	0.1	--	1	V/µs

4) Device on 50mm*50mm*1.5mm epoxy PCB FR4 with 6cm² (one layer, 70µm thick) copper area for V_{bb} connection. PCB is vertical without blown air.

chanhvinh.com

Parameter and Conditions at T_j = 25 °C, V_{bb} = 12 V unless otherwise specified		Symbol	Values			Unit
			min	typ	max	
Operating Parameters						
Operating voltage [5]	T_j =-40...+150°C:	$V_{bb(on)}$	5.0	--	34	V
Undervoltage shutdown	T_j =-40...+150°C:	$V_{bb(under)}$	3.2	--	5.0	V
Undervoltage restart	T_j =-40...+25°C: T_j =+150°C:	$V_{bb(u\ rst)}$	--	4.5	5.5 6.0	V
Undervoltage restart of charge pump see diagram page 13	T_j =-40...+25°C: T_j =25...150°C:	$V_{bb(ucp)}$	-- --	4.7 --	6.5 7.0	V
Undervoltage hysteresis $\Delta V_{bb(under)} = V_{bb(u\ rst)} - V_{bb(under)}$		$\Delta V_{bb(under)}$	--	0.5	--	V
Overvoltage shutdown	T_j =-40...+150°C:	$V_{bb(over)}$	34	--	43	V
Overvoltage restart	T_j =-40...+150°C:	$V_{bb(o\ rst)}$	33	--	--	V
Overvoltage hysteresis	T_j =-40...+150°C:	$\Delta V_{bb(over)}$	--	1	--	V
Overvoltage protection[6] I_{bb}=40 mA	T_j =-40°C: T_j =+25...+150°C	$V_{bb(AZ)}$	41 43	-- 47	-- 52	V
Standby current (pin 4) V_{IN}=0	T_j=-40...+25°C: T_j= 150°C:	$I_{bb(off)}$	-- --	4 12	15 25	µA
Off state output current (included in $I_{bb(off)}$) V_{IN}=0,	T_j =-40...+150°C:	$I_{L(off)}$	--	--	10	µA
Operating current (Pin 2)[7], V_{IN}=5 V		I_{GND}	--	1.2	3	mA

5) At supply voltage increase up to V_{bb}= 4.7 V typ without charge pump, $V_{OUT} \approx V_{bb}$ - 2 V

6) Supply voltages higher than $V_{bb(AZ)}$ require an external current limit for the GND and status pins (a 150 Ω resistor in the GND connection is recommended). See also $V_{ON(CL)}$ in table of protection functions and circuit diagram page 9.

7) Add I_{ST}, if I_{ST} > 0, add I_{IN}, if V_{IN}>5.5 V

chanhvinh.com

Parameter and Conditions at T_j = 25 °C, V_{bb} = 12 V unless otherwise specified	Symbol	Values			Unit
		min	typ	max	
Protection Functions[8]					
Initial peak short circuit current limit (pin 4 to 6&7)	$I_{L(SCp)}$				
T_j =-40°C:		48	56	65	A
T_j =25°C:		40	50	58	
T_j =+150°C:		31	37	45	
Repetitive short circuit shutdown current limit $T_j = T_{jt}$ (see timing diagrams, page 12)	$I_{L(SCr)}$	--	24	--	A
Output clamp (inductive load switch off) at $V_{OUT} = V_{bb} - V_{ON(CL)}$; I_L= 40 mA, T_j =-40°C:	$V_{ON(CL)}$	41	--	--	V
T_j =+25..+150°C:		43	47	52	
Thermal overload trip temperature	T_{jt}	150	--	--	°C
Thermal hysteresis	ΔT_{jt}	--	10	--	K
Reverse battery (pin 4 to 2) [9]	$-V_{bb}$	--	--	32	V
Reverse battery voltage drop ($V_{out} > V_{bb}$) I_L = -5 A T_j=150 °C:	$-V_{ON(rev)}$	--	600	--	mV
Diagnostic Characteristics					
Current sense ratio[10], static on-condition, V_{IS} = 0...5 V, $V_{bb(on)}$ = 6.5[11]...27V, $k_{ILIS} = I_L / I_{IS}$ T_j = -40°C, I_L = 5 A:	k_{ILIS}	4550	5000	6000	
T_j= -40°C, I_L= 0.5 A:		3300	5000	8000	
T_j= 25...+150°C, I_L= 5 A:		4550	5000	5550	
, T_j= 25...+150°C, I_L = 0.5 A:		4000	5000	6500	
Current sense output voltage limitation T_j = -40 ...+150°C I_{IS} = 0, I_L = 5 A:	$V_{IS(lim)}$	5.4	6.1	6.9	V
Current sense leakage/offset current T_j = -40 ...+150°C V_{IN}=0, V_{IS} = 0, I_L = 0:	$I_{IS(LL)}$	0	--	1	µA
V_{IN}=5 V, V_{IS} = 0, I_L = 0:	$I_{IS(LH)}$	0	--	15	
V_{IN}=5 V, V_{IS} = 0, V_{OUT} = 0 (short circuit):	$I_{IS(SH)}$[12]	0	--	10	

8) Integrated protection functions are designed to prevent IC destruction under fault conditions described in the data sheet. Fault conditions are considered as "outside" normal operating range. Protection functions are not designed for continuous repetitive operation.

9) Requires 150 Ω resistor in GND connection. The reverse load current through the intrinsic drain-source diode has to be limited by the connected load. Note that the power dissipation is higher compared to normal operating conditions due to the voltage drop across the intrinsic drain-source diode. The temperature protection is not active during reverse current operation! Input and Status currents have to be limited (see max. ratings page 2 and circuit page 9).

10) This range for the current sense ratio refers to all devices. The accuracy of the k_{ILIS} can be raised at least by a factor of two by matching the value of k_{ILIS} for every single device.
In the case of current limitation the sense current I_{IS} is zero and the diagnostic feedback potential V_{ST} is High. See figure 2b, page 11.

11) Valid if $V_{bb(u\ rst)}$ was exceeded before.

12) not subject to production test, specified by design

chanhvinh.com

Parameter and Conditions at T_j = 25 °C, V_{bb} = 12 V unless otherwise specified	Symbol	Values			Unit
		min	typ	max	
Current sense settling time to $I_{IS\ static}$±10% after positive input slope[13], I_L = 0 ⎍ 5 A, T_j= -40...+150°C	$t_{son(IS)}$	--	--	300	µs
Current sense settling time to 10% of I_{IS} static after negative input slope[13], I_L = 5 ⎎ 0 A, T_j= -40...+150°C	$t_{soff(IS)}$	--	30	100	µs
Current sense rise time (60% to 90%) after change of load current[13], I_L = 2.5 ⎍ 5 A	$t_{slc(IS)}$	--	10	--	µs
Open load detection voltage[14] (off-condition) T_j=-40..150°C:	$V_{OUT(OL)}$	2	3	4	V
Internal output pull down (pin 6 to 2), V_{OUT}=5 V, T_j=-40..150°C	R_O	5	15	40	kΩ
Input and Status Feedback[15]					
Input resistance see circuit page 8	R_I	3,0	4,5	7,0	kΩ
Input turn-on threshold voltage ⎍ T_j =-40..+150°C:	$V_{IN(T+)}$	--	--	3.5	V
Input turn-off threshold voltage ⎎ T_j =-40..+150°C:	$V_{IN(T-)}$	1.5	--	--	V
Input threshold hysteresis	$\Delta V_{IN(T)}$	--	0.5	--	V
Off state input current (pin 3), V_{IN} = 0.4 V T_j =-40..+150°C	$I_{IN(off)}$	1	--	50	µA
On state input current (pin 3), V_{IN} = 5 V T_j =-40..+150°C	$I_{IN(on)}$	20	50	90	µA
Delay time for status with open load after Input neg. slope (see diagram page 13)	$t_{d(ST\ OL3)}$	--	400	--	µs
Status delay after positive input slope[13] T_j=-40 ... +150°C:	$t_{don(ST)}$	--	13	--	µs
Status delay after negative input slope[13] T_j=-40 ... +150°C:	$t_{doff(ST)}$	--	1	--	µs
Status output (open drain)					
Zener limit voltage T_j =-40...+150°C, I_{ST} = +1.6 mA:	$V_{ST(high)}$	5.4	6.1	6.9	V
ST low voltage T_j =-40...+25°C, I_{ST} = +1.6 mA:	$V_{ST(low)}$	--	--	0.4	
T_j = +150°C, I_{ST} = +1.6 mA:		--	--	0.7	
Status leakage current, V_{ST} = 5 V, T_j=25 ... +150°C:	$I_{ST(high)}$	--	--	2	µA

13) not subject to production test, specified by design
14) External pull up resistor required for open load detection in off state.
15) If a ground resistor R_{GND} is used, add the voltage drop across this resistor.

chanhvinh.com

Truth Table

	Input level	Output level	Status level	Current Sense I_{IS}
Normal operation	L H	L H	H L	0 nominal
Current-limitation	L H	L H	H H	0 0
Short circuit to GND	L H	L L[16)]	H H	0 0
Over-temperature	L H	L L	H H	0 0
Short circuit to V_{bb}	L H	H H	L[17)] L	0 <nominal [18)]
Open load	L H	L[19)] H	H (L[20)]) L	0 0
Undervoltage	L H	L L	H L	0 0
Overvoltage	L H	L L	H L	0 0
Negative output voltage clamp	L	L	H	0

L = "Low" Level X = don't care Z = high impedance, potential depends on external circuit
H = "High" Level Status signal after the time delay shown in the diagrams (see fig 5. page 12...13)

16) The voltage drop over the power transistor is V_{bb}-V_{OUT}>typ.3V. Under this condition the sense current I_{IS} is zero

17) An external short of output to V_{bb}, in the off state, causes an internal current from output to ground. If R_{GND} is used, an offset voltage at the GND and ST pins will occur and the $V_{ST\ low}$ signal may be errorious.

18) Low ohmic short to V_{bb} may reduce the output current I_L and therefore also the sense current I_{IS}.

19) Power Transistor off, high impedance

20) with external resistor between pin 4 and pin 6&7

chanhvinh.com

Terms

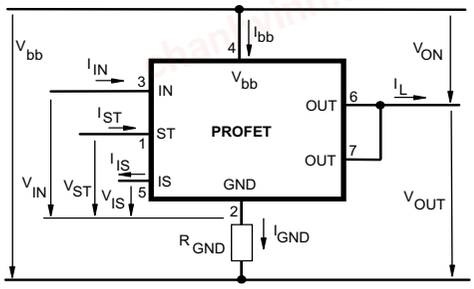

Input circuit (ESD protection)

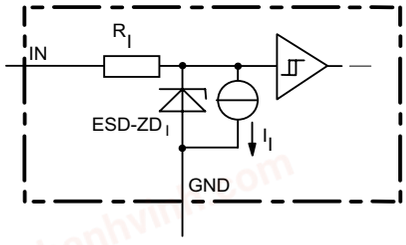

The use of ESD zener diodes as voltage clamp at DC conditions is not recommended.

Status output

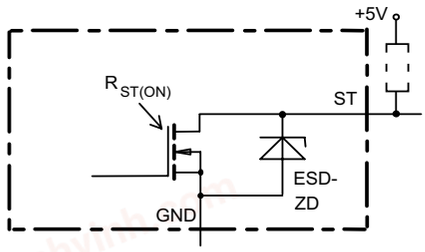

ESD-Zener diode: 6.1 V typ., max 5 mA;
$R_{ST(ON)}$ < 440 Ω at 1.6 mA, The use of ESD zener diodes as voltage clamp at DC conditions is not recommended.

Current sense output

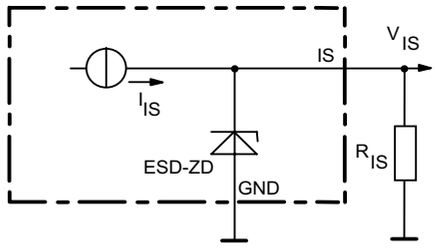

ESD-Zener diode: 6.1 V typ., max 14 mA;
R_{IS} = 1 kΩ nominal

Inductive and overvoltage output clamp

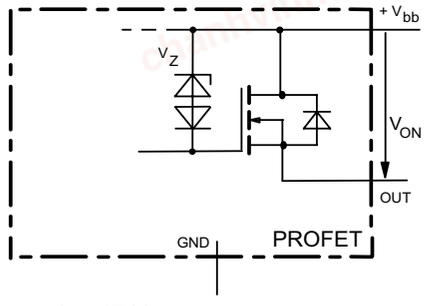

V_{ON} clamped to 47 V typ.

chanhvinh.com

Overvoltage protection of logic part

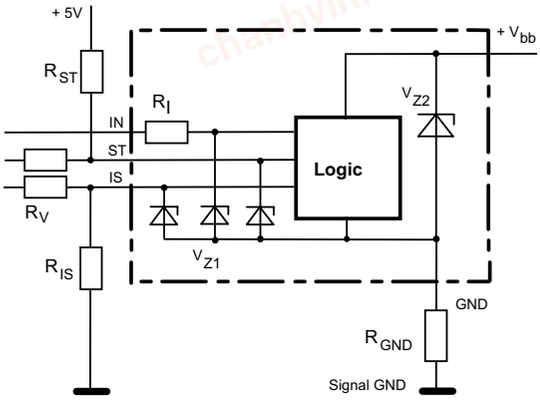

V_{Z1} = 6.1 V typ., V_{Z2} = 47 V typ., R_I= 4 kΩ typ, R_{GND}= 150 Ω, R_{ST}= 15 kΩ, R_{IS}= 1 kΩ, R_V= 15 kΩ,

Reverse battery protection

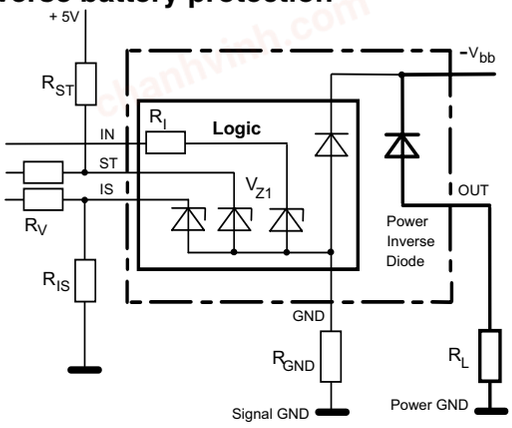

The load R_L is inverse on, temperature protection is not active

R_{GND}= 150 Ω, R_I= 4 kΩ typ, R_{ST}≥ 500 Ω, R_{IS}≥ 200 Ω, R_V≥ 500 Ω,

Open-load detection

OFF-state diagnostic condition: V_{OUT} > 3 V typ.; IN low

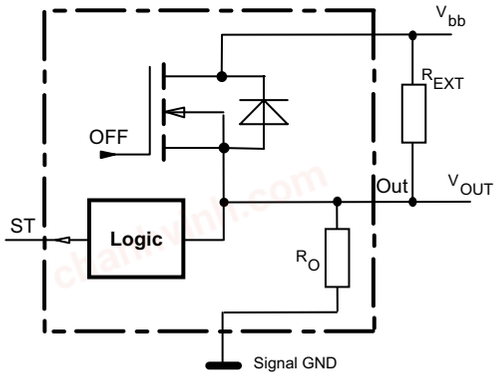

GND disconnect

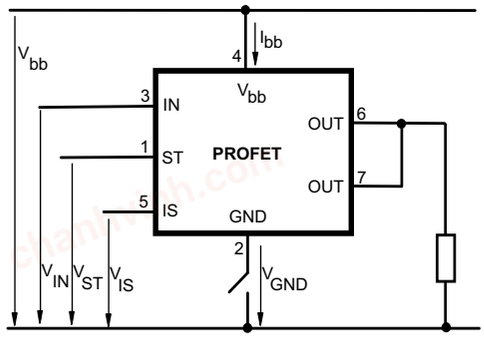

Any kind of load. In case of Input=high is $V_{OUT} \approx V_{IN} - V_{IN(T+)}$.
Due to V_{GND} >0, no V_{ST} = low signal available.

GND disconnect with GND pull up

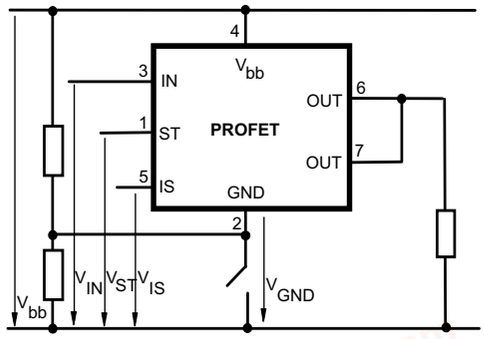

Any kind of load. If $V_{GND} > V_{IN} - V_{IN(T+)}$ device stays off
Due to V_{GND} >0, no V_{ST} = low signal available.

V_{bb} disconnect with energized inductive load

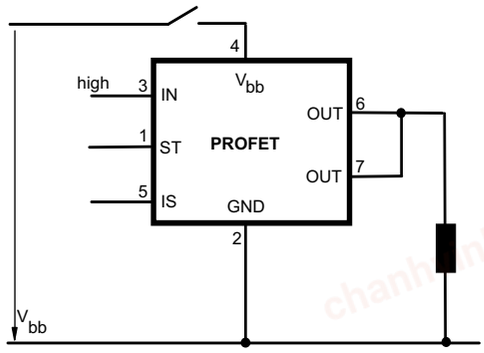

Normal load current can be handled by the PROFET itself.

chanhvinh.com

V_{bb} disconnect with charged external inductive load

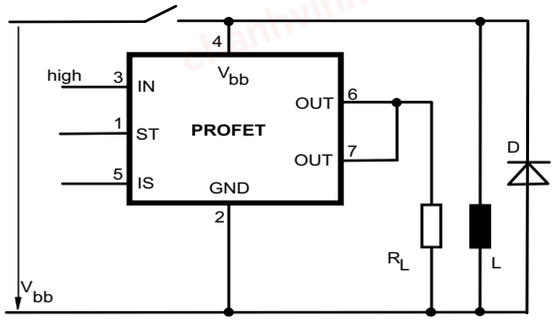

If other external inductive loads L are connected to the PROFET, additional elements like D are necessary.

Inductive Load switch-off energy dissipation

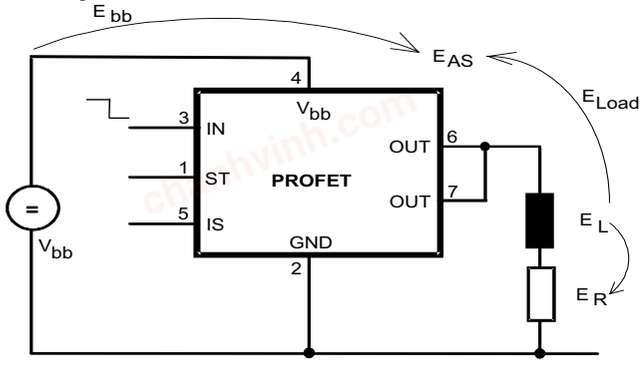

Energy stored in load inductance:

$$E_L = {}^1/_2 \cdot L \cdot I_L^2$$

While demagnetizing load inductance, the energy dissipated in PROFET is

$$E_{AS} = E_{bb} + E_L - E_R = \int V_{ON(CL)} \cdot i_L(t)\, dt,$$

with an approximate solution for $R_L > 0\,\Omega$:

$$E_{AS} = \frac{I_L \cdot L}{2 \cdot R_L} \cdot (V_{bb} + |V_{OUT(CL)}|) \cdot ln\left(1 + \frac{I_L \cdot R_L}{|V_{OUT(CL)}|}\right)$$

chanhvinh.com

Timing diagrams

Figure 1a: Switching a resistive load, change of load current in on-condition:

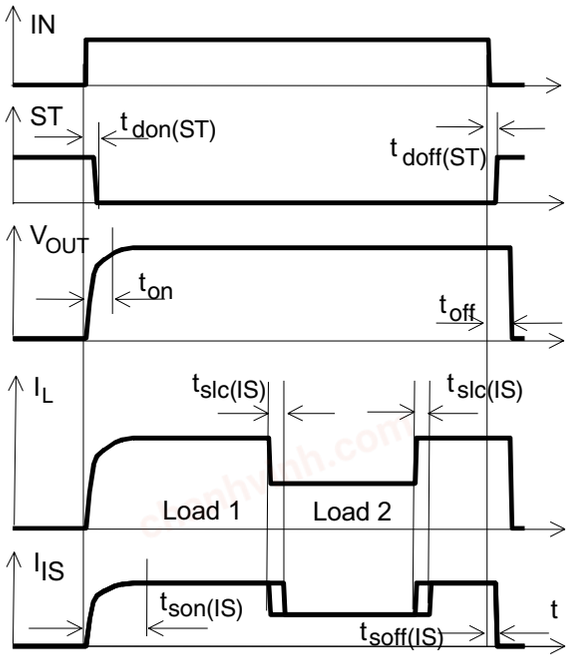

The sense signal is not valid during settling time after turn or change of load current.

Figure 1b: V_{bb} turn on:

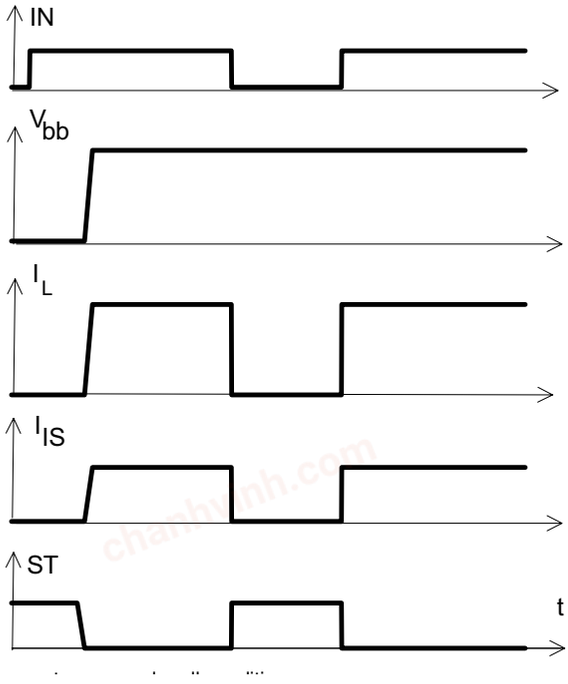

Figure 2a: Switching a lamp

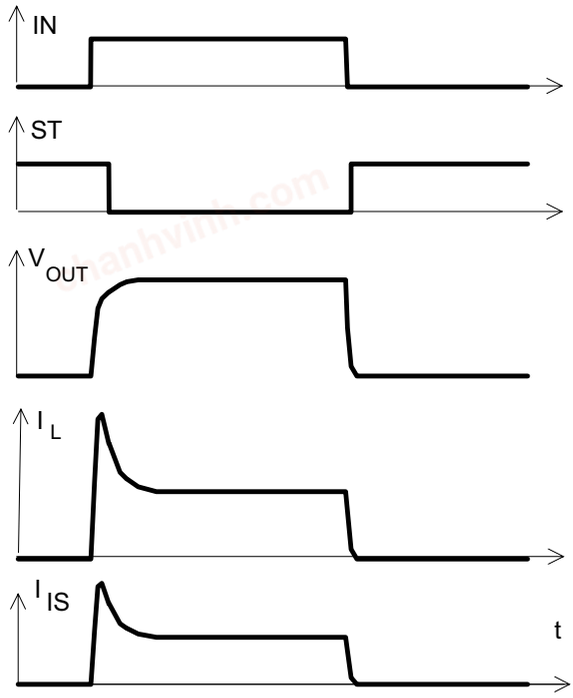

Figure 2b: Switching a lamp with current limit:

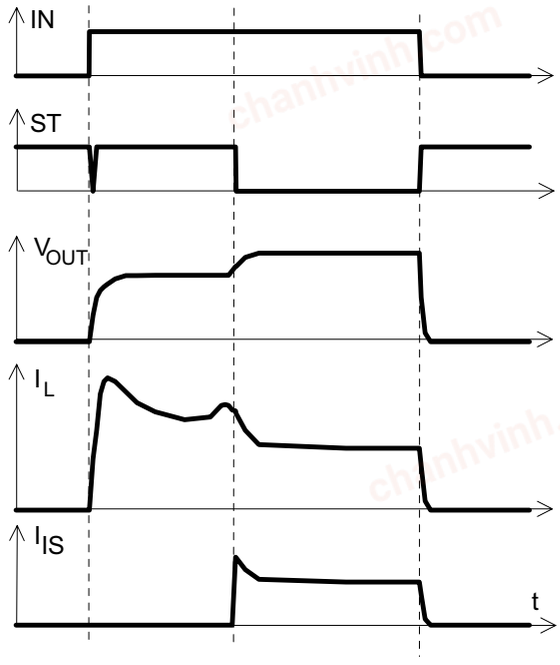

chanhvinh.com

Figure 2c: Switching an inductive load:

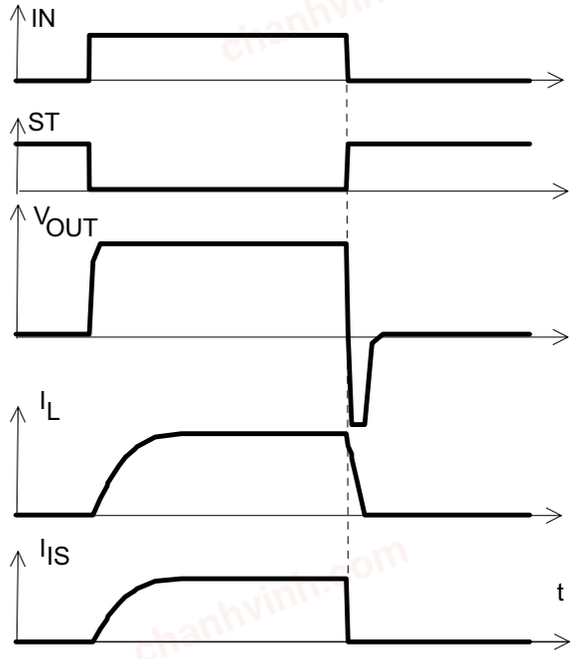

Figure 3a: Short circuit:
shut down by overtempertature, reset by cooling

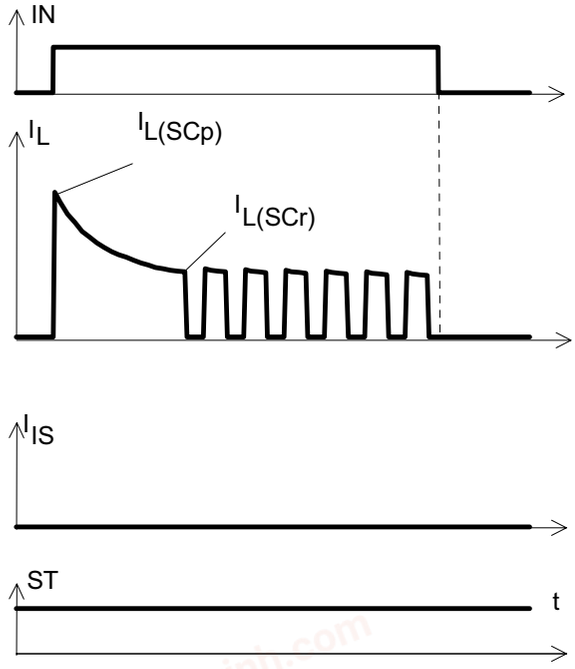

Heating up may require several milliseconds, depending on external conditions
$I_{L(SCp)}$ = 50 A typ. increases with decreasing temperature.

Figure 4a: Overtemperature:
Reset if $T_j < T_{jt}$

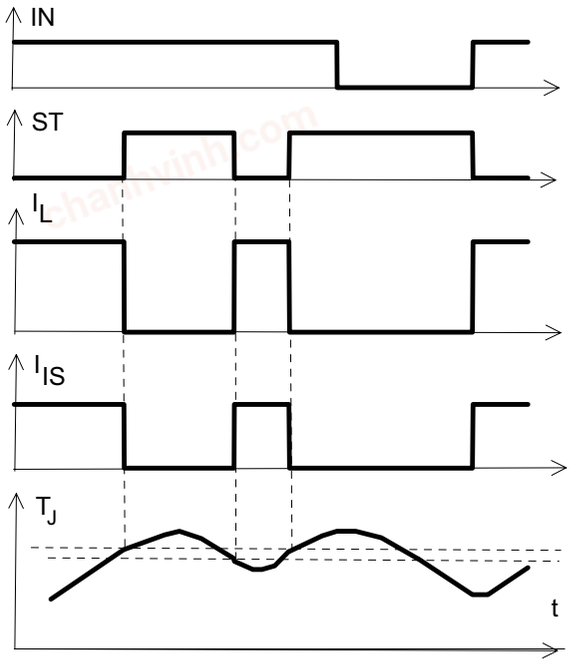

Figure 5a: Open load: detection in ON-state,
open load occurs in on-state

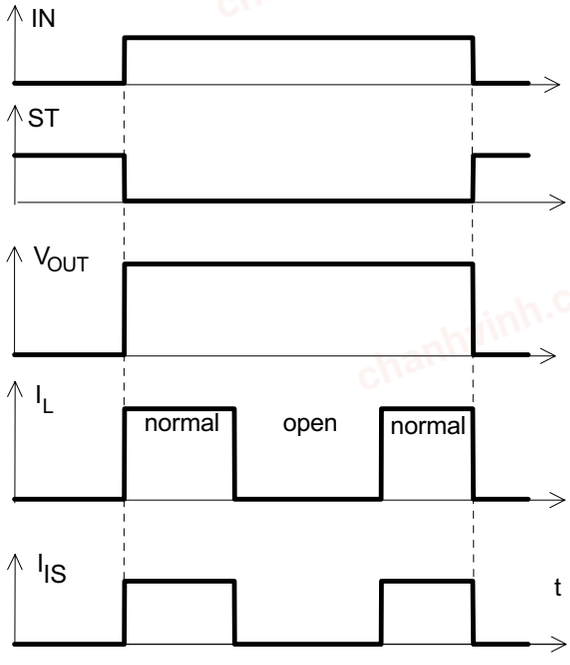

chanhvinh.com

Figure 5b: Open load: detection in ON- and OFF-state (with R_{EXT}), turn on/off to open load

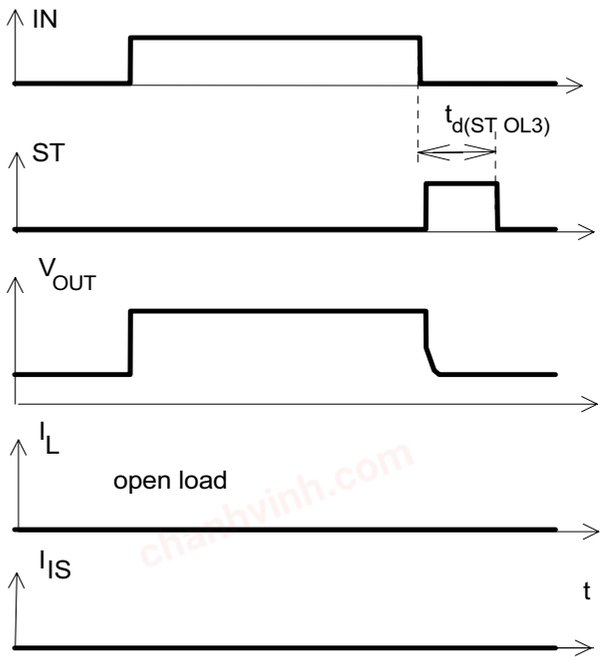

Figure 6a: Undervoltage:

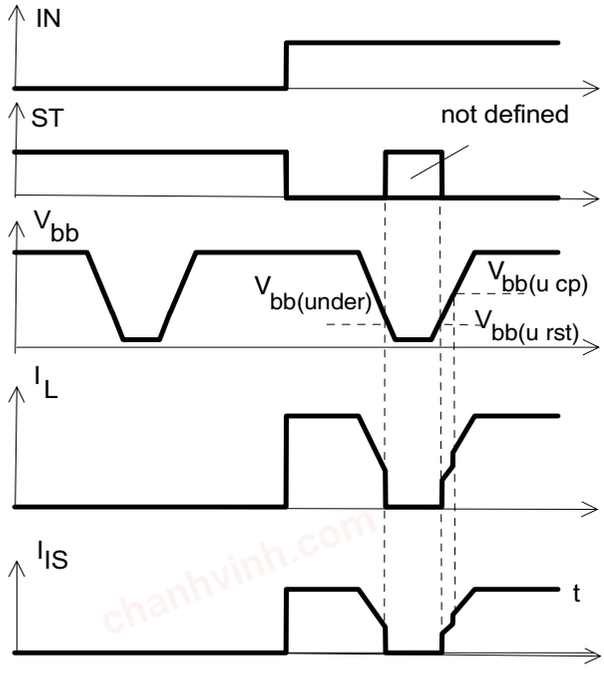

Figure 6b: Undervoltage restart of charge pump

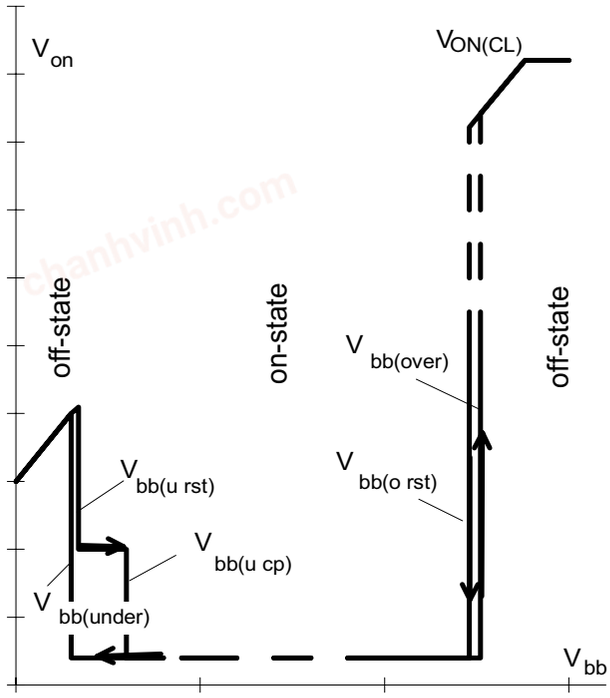

charge pump starts at $V_{bb(ucp)}$ =4.7 V typ.

Figure 7a: Overvoltage:

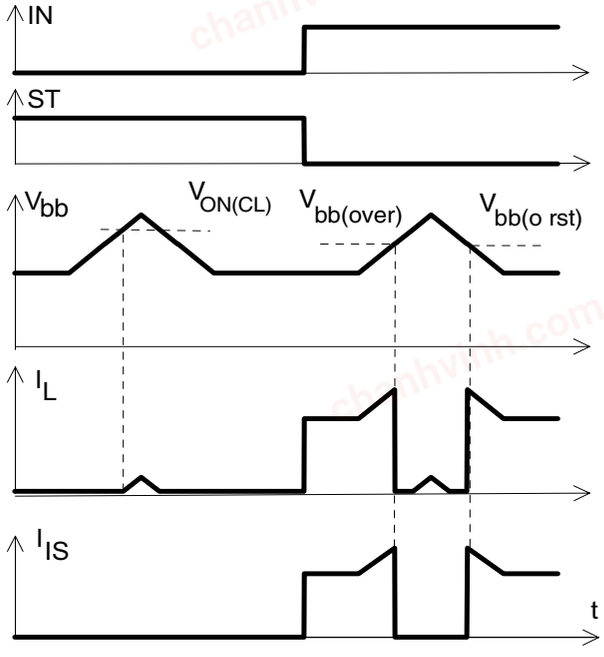

chanhvinh.com

Figure 8a: Current sense versus load current:

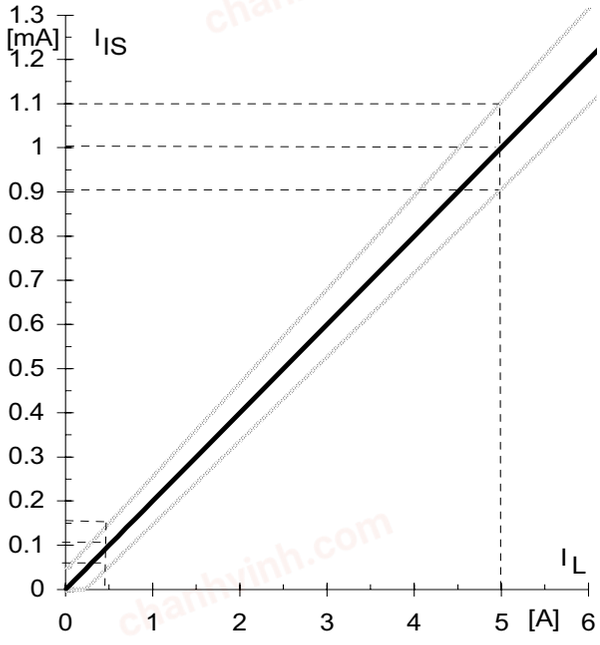

Figure 8b: Current sense ratio[21]:

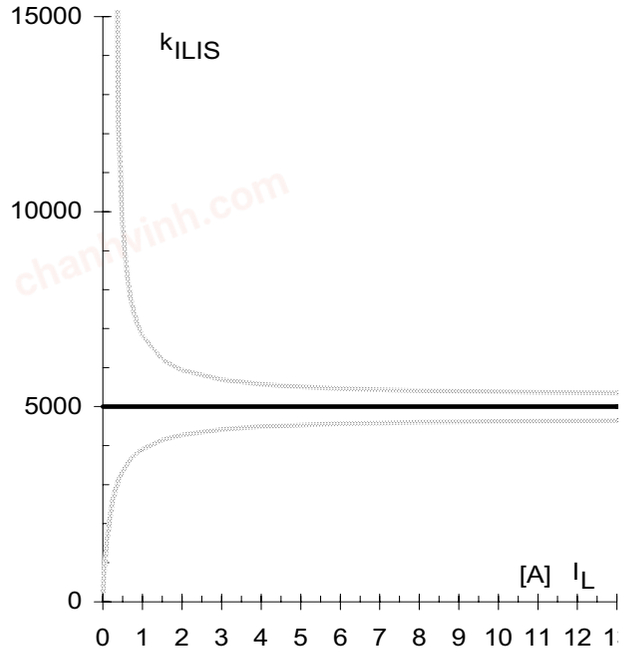

Figure 9a: Output voltage drop versus load current:

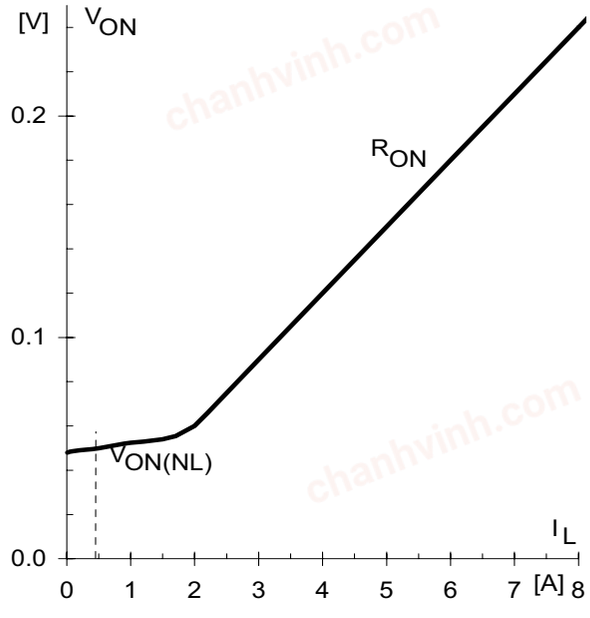

[21] This range for the current sense ratio refers to all devices. The accuracy of the k_{ILIS} can be raised at least by a factor of two by matching the value of k_{ILIS} for every single device.

chanhvinh.com

Package Outlines

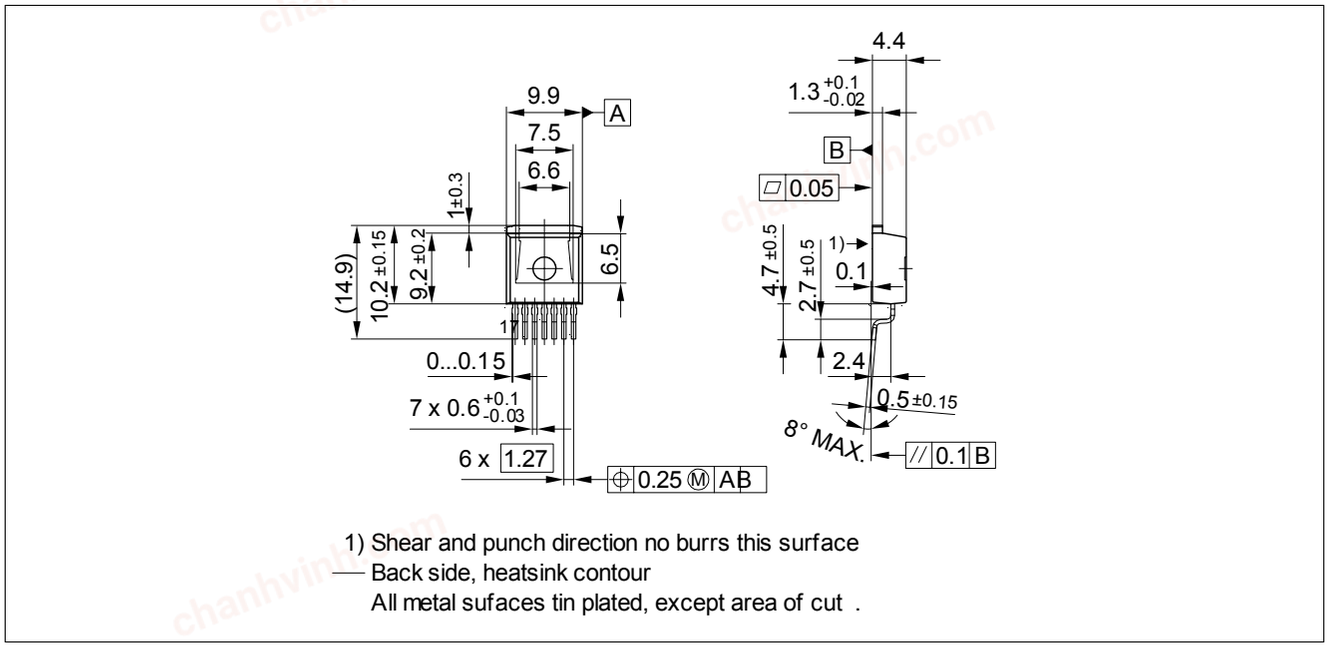

Figure 1 **PG-TO-263-7-2** (Plastic Dual Small Outline Package) (RoHS-compliant)

To meet the world-wide customer requirements for environmentally friendly products and to be compliant with government regulations the device is available as a green product. Green products are RoHS-Compliant (i.e Pb-free finish on leads and suitable for Pb-free soldering according to IPC/JEDEC J-STD-020).

Please specify the package needed (e.g. green package) when placing an order

You can find all of our packages, sorts of packing and others in our Infineon Internet Page “Products”: **http://www.infineon.com/products**.

Dimensions in mm

chanhvinh.com

Revision History

Version	Date	Changes
V1.1	2008-19-08	Creation of the green datasheet. First page : Adding the green logo and the AEC qualified Adding the bullet AEC qualified and the RoHS compliant features Package page Modification of the package to be green.

chanhvinh.com

Edition 2008-19-08

Published by
Infineon Technologies AG
81726 Munich, Germany

© Infineon Technologies AG 8/19/08.
All Rights Reserved.

Legal Disclaimer

The information given in this document shall in no event be regarded as a guarantee of conditions or characteristics (“Beschaffenheitsgarantie”). With respect to any examples or hints given herein, any typical values stated herein and/or any information regarding the application of the device, Infineon Technologies hereby disclaims any and all warranties and liabilities of any kind, including without limitation warranties of non-infringement of intellectual property rights of any third party.

Information

For further information on technology, delivery terms and conditions and prices please contact your nearest Infineon Technologies Office (**www.infineon.com**).

Warnings

Due to technical requirements components may contain dangerous substances. For information on the types in question please contact your nearest Infineon Technologies Office.

Infineon Technologies Components may only be used in life-support devices or systems with the express written approval of Infineon Technologies, if a failure of such components can reasonably be expected to cause the failure of that life-support device or system, or to affect the safety or effectiveness of that device or system. Life support devices or systems are intended to be implanted in the human body, or to support and/or maintain and sustain and/or protect human life. If they fail, it is reasonable to assume that the health of the user or other persons may be endangered.