chanhvinh.com

SM4000

Magnetic-inductive flow meter

SMR14DXXFRKG/US-100

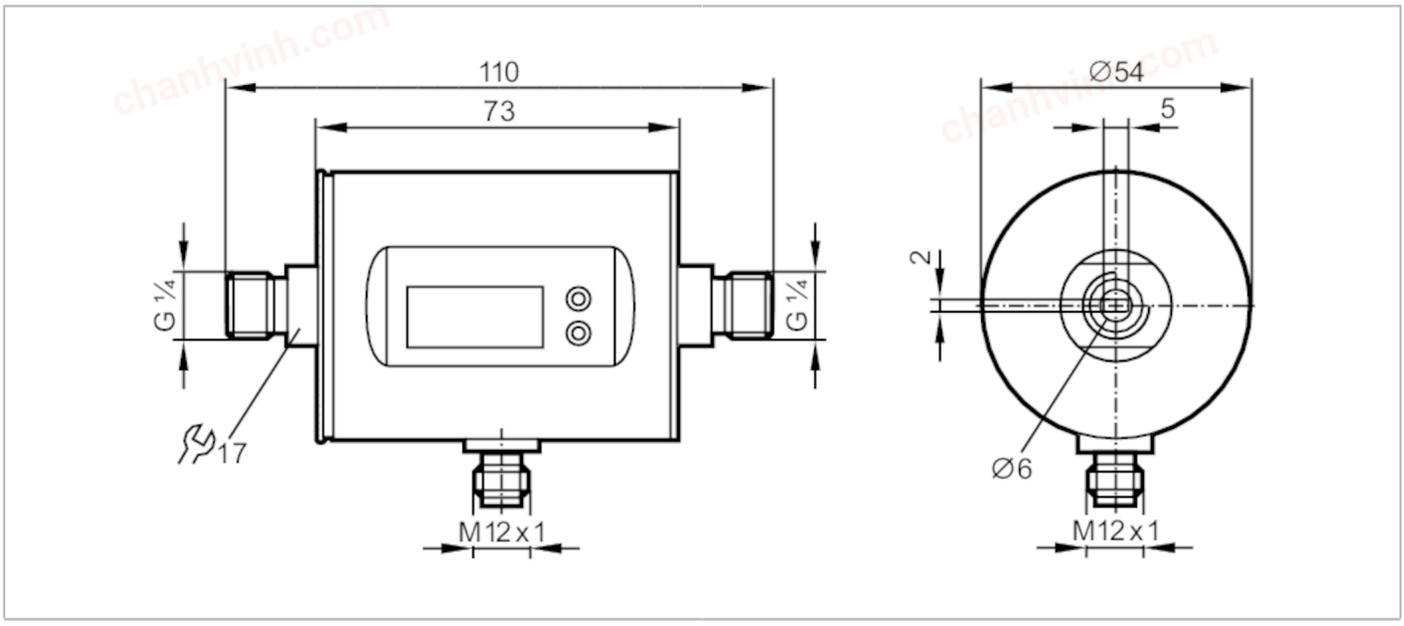

Product characteristics			
Number of inputs and outputs		Number of digital outputs: 2; Number of analogue outputs: 1	
Measuring range		5...3000 ml/min	0.005...3 l/min
Process connection		threaded connection G 1/4 external thread DN6 flat seal	
Application			
Special feature		Gold-plated contacts	
Application		totaliser function; for industrial applications	
Installation		connection to pipe by means of an adapter	
Media		conductive liquids; water; hydrous media	
Note on media		conductivity: ≥ 20 µS/cm	
		viscosity: < 70 mm²/s (40 °C)	
Medium temperature	[°C]	0...60	
Pressure rating		10 bar	1 MPa
MAWP (for applications according to CRN)	[bar]	7.3	
Electrical data			
Operating voltage	[V]	18...30 DC; (to SELV/PELV)	
Current consumption	[mA]	< 80	
Protection class		III	
Reverse polarity protection		yes	
Power-on delay time	[s]	5	
Measuring principle		magnetic-inductive	
Inputs / outputs			
Number of inputs and outputs		Number of digital outputs: 2; Number of analogue outputs: 1	
Inputs			
Inputs		counter reset	

chanhvinh.com

SM4000

Magnetic-inductive flow meter

SMR14DXXFRKG/US-100

Outputs			
Total number of outputs		2	
Output signal		switching signal; analogue signal; pulse signal; IO-Link; (configurable)	
Electrical design		PNP/NPN	
Number of digital outputs		2	
Output function		normally open / normally closed; (parameterisable)	
Max. voltage drop switching output DC	[V]	2	
Permanent current rating of switching output DC	[mA]	200	
Number of analogue outputs		1	
Analogue current output	[mA]	4...20; (scalable)	
Max. load	[Ω]	500	
Analogue voltage output	[V]	0...10; (scalable)	
Min. load resistance	[Ω]	2000	
Pulse output		flow rate meter	
Short-circuit protection		yes	
Type of short-circuit protection		pulsed	
Overload protection		yes	
Measuring/setting range			
Measuring range		5...3000 ml/min	0.005...3 l/min
Display range	[ml/min]	-1999...3600	
Resolution	[ml/min]	1	
Set point SP	[ml/min]	20...3000	
Reset point rP	[ml/min]	5...2984	
Analogue start point ASP	[ml/min]	0...2400	
Analogue end point AEP	[ml/min]	600...3000	
Low flow cut-off LFC	[ml/min]	< 60	
Volumetric flow quantity monitoring			
Pulse value		1...3000 ml	
Pulse length	[s]	0,008...2	
Temperature monitoring			
Measuring range	[°C]	-20...80	
Resolution	[°C]	0.2	
Set point SP	[°C]	-19.2...80	
Reset point rP	[°C]	-19.6...79.6	
Analogue start point	[°C]	-20...60	
Analogue end point	[°C]	0...80	
In steps of	[°C]	0.2	
Accuracy / deviations			
Flow monitoring			
Accuracy (in the measuring range)		± (2 % MW + 0,5 % MEW)	
Repeatability		± 0,2% MEW	

chanhvinh.com

SM4000

Magnetic-inductive flow meter

SMR14DXXFRKG/US-100

Temperature monitoring			
Accuracy	[K]	± 2,5 (Q > 0,5 l/min)	
Response times			
Flow monitoring			
Response time	[s]	0.15; (dAP = 0, T19)	
Delay time programmable dS, dr	[s]	0...50	
Damping process value dAP	[s]	0...5	
Temperature monitoring			
Dynamic response T05 / T09	[s]	T09 = 40 (Q > 1 l/min)	
Software / programming			
Parameter setting options		Flow monitoring; quantity meter; Preset counter; Temperature monitoring; hysteresis / window; normally open / normally closed; switching logic; current/ voltage/pulse output; start-up delay; display can be deactivated; Display unit	
Interfaces			
Communication interface		IO-Link	
Transmission type		COM2 (38,4 kBaud)	
IO-Link revision		1.1	
SDCI standard		IEC 61131-9	
Profiles		Smart Sensor: Process Data Variable; Device Identification, Device Diagnosis	
SIO mode		yes	
Required master port type		A	
Process data analogue		3	
Process data binary		2	
Min. process cycle time	[ms]	4	
Supported DeviceIDs		**Type of operation**	**DeviceID**
		default	671
Operating conditions			
Ambient temperature	[°C]	-10...60	
Storage temperature	[°C]	-25...80	
Protection		IP 67	
Tests / approvals			
EMC		DIN EN 60947-5-9	
CPA approval		model number	007MI
		accuracy class	-
		maximum allowable error	± 2,5 % FS
		Q (min)	0,0003 m³/h
		Q (t)	-
		Q (max)	0,18 m³/h
Shock resistance		DIN IEC 68-2-27	20 g (11 ms)
Vibration resistance		DIN IEC 68-2-6	5 g (10...2000 Hz)
MTTF	[years]	144	
Pressure Equipment Directive		Sound engineering practice; can be used for group 2 fluids; group 1 fluids on request	
Mechanical data			
Weight	[g]	536.5	

chanhvinh.com

SM4000

Magnetic-inductive flow meter

SMR14DXXFRKG/US-100

Dimensions [mm]	Ø 54 / L = 110	
Materials	stainless steel (316L/1.4404); PBT-GF20; PC; FKM; TPE	
Materials (wetted parts)	stainless steel (316L/1.4404); PEEK; FKM	
Process connection	threaded connection G 1/4 external thread DN6 flat seal	
Displays / operating elements		
Display	Display unit	6 x LED, green (ml/min, l/h, l, m³, °C, 10³)
	switching status	2 x LED, yellow
	measured values	alphanumeric display, 4-digit
	programming	alphanumeric display, 4-digit
Remarks		
Remarks	MW = measured value	
	MEW = Final value of the measuring range	
Pack quantity	1 pcs.	

Electrical connection

Connector: 1 x M12; coding: A; Contacts: gold-plated



chanhvinh.com

SM4000

Magnetic-inductive flow meter

SMR14DXXFRKG/US-100

Connection

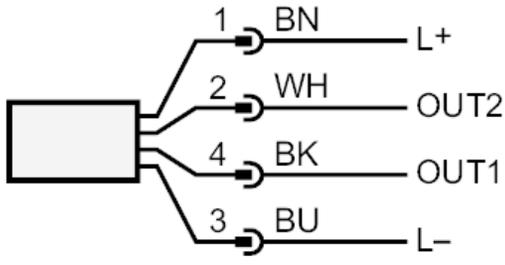

	colours to DIN EN 60947-5-2
OUT1:	
-	switching output volumetric flow quantity monitoring
-	Pulse output quantity meter
-	signal output Preset counter
-	IO-Link
OUT2:	
-	switching output volumetric flow quantity monitoring
-	switching output Temperature monitoring
-	analogue output volumetric flow quantity monitoring
-	analogue output Temperature monitoring
-	input counter reset
	Core colours :
BK =	black
BN =	brown
BU =	blue
WH =	white

chanhvinh.com

SM4000

Magnetic-inductive flow meter

SMR14DXXFRKG/US-100

Diagrams and graphs

Pressure loss

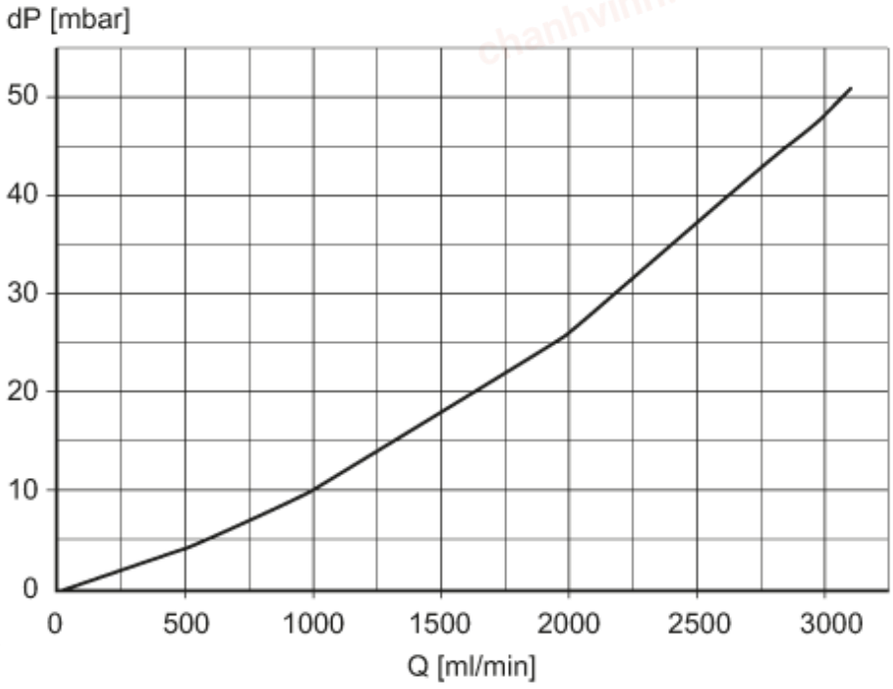

dP Pressure loss

Q volumetric flow quantity