chanhvinh.com

KQ5101

Capacitive sensor

KQ-3120NFPKG/0,1M/US

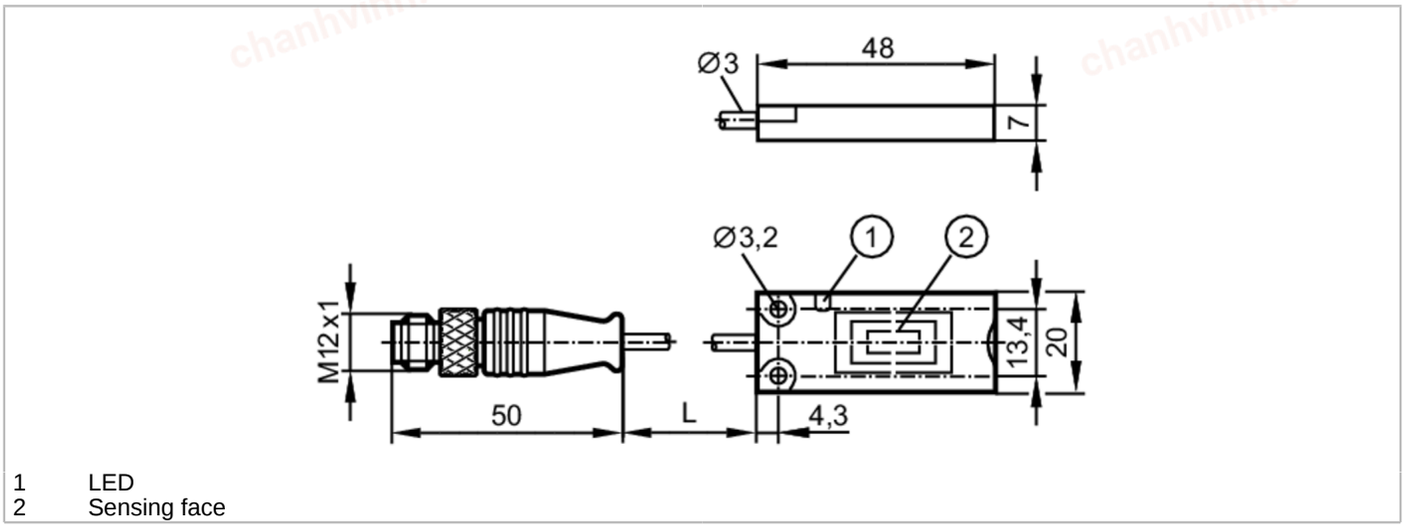

1 LED
2 Sensing face

Product characteristics		
Electrical design		PNP
Output function		normally open / normally closed; (selectable)
Sensing range	[mm]	12
Communication interface		IO-Link
Housing		rectangular
Dimensions	[mm]	20 x 7 x 48
Electrical data		
Operating voltage	[V]	10...30 DC
Current consumption	[mA]	< 17
Protection class		III
Reverse polarity protection		yes
Measuring principle		capacitive
Outputs		
Electrical design		PNP
Output function		normally open / normally closed; (selectable)
Max. voltage drop switching output DC	[V]	2.5
Permanent current rating of switching output DC	[mA]	100
Switching frequency DC	[Hz]	10
Short-circuit protection		yes
Overload protection		yes
Detection zone		
Sensing range	[mm]	12
Real sensing range Sr	[mm]	12 ± 10 %
Accuracy / deviations		
Hysteresis	[% of Sr]	1...15
Switch point drift	[% of Sr]	-20...20

chanhvinh.com

KQ5101

Capacitive sensor

KQ-3120NFPKG/0,1M/US

Software / programming			
Parameter setting options		only via IO-Link	
Interfaces			
Communication interface		IO-Link	
Transmission type		COM1 (4,8 kBaud)	
IO-Link revision		1.1	
SDCI standard		IEC 61131-9 CDV	
Profiles		Smart Sensor	
SIO mode		yes	
Supported DeviceIDs	Type of operation	DeviceID	
	Default	371	
Operating conditions			
Ambient temperature [°C]		-25...80	
Note on ambient temperature		for UL application: ...50 °C	
Protection		IP 65; IP 67; IP 69K	
Tests / approvals			
EMC	EN 61000-4-2	8 kV AD	
	EN 61000-4-3	10 V/m	
	EN 61000-4-4	2 kV	
	EN 61000-4-6	3 V	
	EN 55011	class B	
Vibration resistance	EN 60068-2-6 Fc	(10...55 Hz) / 1 mm amplitude, oscillation period 5 min., 30 min. per axis at resonance or 55 Hz	
Shock resistance	EN 60068-2-27 Ea	30 g 6 shocks / 11 ms half-sine (x, y, z)	
MTTF [years]		771	
UL approval	Ta	-25...50 °C	
	Enclosure type	Type 1	
	power supply	Class 2	
Mechanical data			
Weight [g]		27.4	
Housing		rectangular	
Mounting		non-flush mountable	
Dimensions [mm]		20 x 7 x 48	
Materials		PBT; TPE-U; stainless steel	
Displays / operating elements			
Display	switching status	1 x LED, yellow	
Remarks			
Pack quantity		1 pcs.	

chanhvinh.com

KQ5101

Capacitive sensor

KQ-3120NFPKG/0,1M/US

Electrical connection - plug

Cable: 0.1 m, PUR, Ø 2.9 mm

Connector: 1 x M12; coding: A

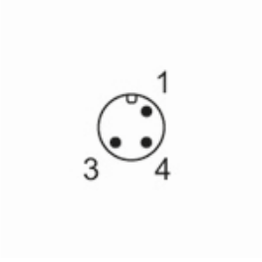

Connection

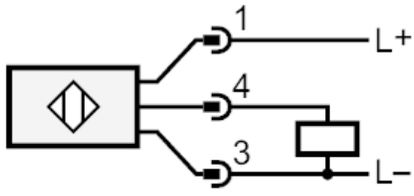

4: OUT / IO-Link