chanhvinh.com

E33341

Universal process adapter

ADAPT UNI RD52

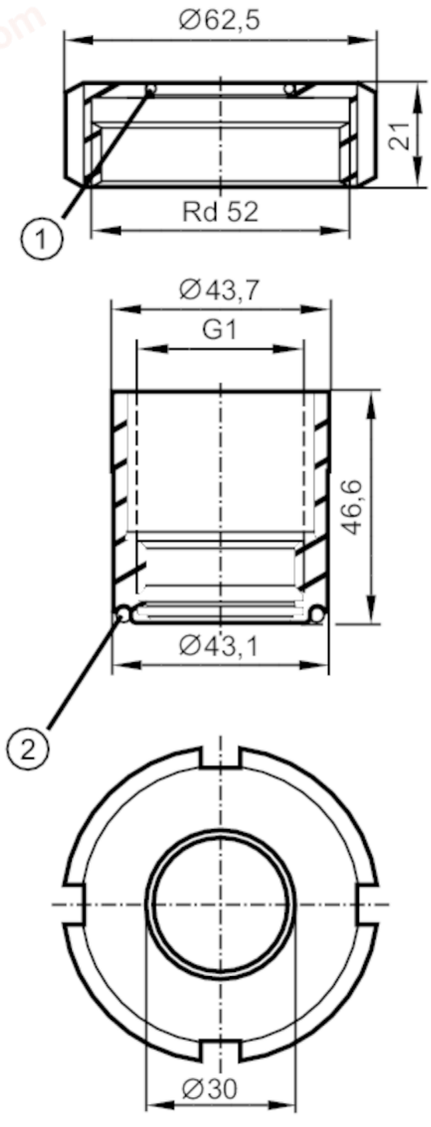

1 O-ring 30 x 2, FKM
2 O-ring 36 x 3, EPDM

Application		
Pressure rating	[bar]	16
Tests / approvals		
Pressure Equipment Directive		A possible classification to PED depends on the application and has to be carried out by the user / operator.
Pressure Equipment Directive EAC		The adapter is intended for use in devices, machines and installations that do not fall under the categories of the technical rule TR CU 032/2013.
Safety instructions		The compatibility between medium and product material has to be checked in all applications.
Mechanical data		
Weight	[g]	378
Materials (wetted parts)		stainless steel (1.4435 / 316L) ; surface characteristics : Ra<0,4 / Rz 4
Sensor connection		G 1 Aseptoflex Vario
Process connection		universal process adapter Rd 52

chanhvinh.com

E33341

Universal process adapter

ADAPT UNI RD52

Sealing	Gasket
Hygienic equipment class to DIN 11866	H4
Accessories	
Items supplied	O-ring: 24 x 2, EPDM, FDA compliant, E30054
	O-ring: 30 x 2, FKM
	O-ring: 36 x 3, EPDM, FDA compliant
Accessories (optional)	O-ring: 24 x 2, FKM, FDA compliant, E30123
	sealing ring, PEEK, FDA compliant, E30124
Remarks	
Pack quantity	1 pcs.