chanhvinh.com

E30108

Welding adapter for process sensors

WELDING ADAPTER D6

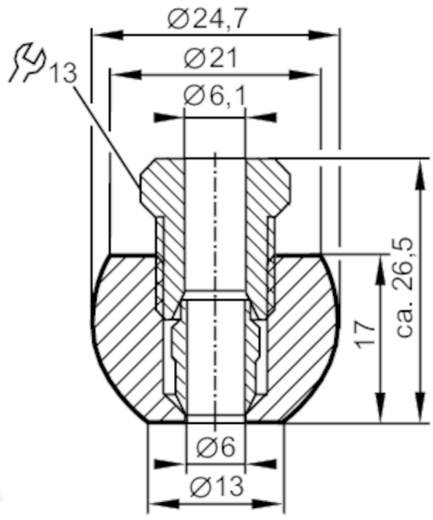

Application		
Design		for temperature sensors Ø 6 mm
Installation		Clamp fitting
Pressure rating	[bar]	160
Tests / approvals		
Pressure Equipment Directive		A possible classification to PED depends on the application and has to be carried out by the user / operator.
Pressure Equipment Directive EAC		The adapter is intended for use in devices, machines and installations that do not fall under the categories of the technical rule TR CU 032/2013.
Safety instructions		The compatibility between medium and product material has to be checked in all applications.
Mechanical data		
Weight	[g]	63
Materials		stainless steel (1.4404 / 316L)
Sensor connection		Ø 6 mm
Process connection		welding adapter Ø 24,7 mm
Remarks		
Pack quantity		1 pcs.