chanhvinh.com

ø22 Flush Mount CW Switches & Pilot Devices

Flush bezel projects only 2.5mm from front of panel and only 39.9mm behind the panel!

Key features:

- ø22.3mm mounting hole compliant with IEC 60947-5-1
- 3.5-mm operator travel for pushbuttons ensures comfortable and reliable operation
- Black and metallic bezels available
- Illuminated pushbuttons, pushbuttons, pilot lights, selector switches and key selector switches are available
- Direct opening NC contact
- Seven different keys can be chosen for key selector switches
- 10A contact rating; up to three contact blocks for non-illuminated and two contact blocks for illuminated models can be connected
- Contact blocks can be removed by locking lever
- IP20 finger-safe screw terminals
- UL Type 4X rating

Applicable Standards	Mark	File No. or Organization
UL508 CSA C22.2 No.14	c UL us	UL/c-UL File No. E68961
EN60947-5-1	TÜV	TÜV SÜD
	CE	EC Low Voltage Directive



Specifications

Operating Temperature	Non-illuminated: –25 to +60°C (no freezing) LED illuminated: –25 to +55°C (no freezing)
Operating Humidity	45 to 85% RH (no condensation)
Storage Temperature	–40 to +80°C
Contact Resistance	50 mΩ maximum (initial value)
Insulation Resistance	100 MΩ minimum (500V DC megger)
Overvoltage Category	II (IEC 60664-1)
Impulse Withstand Voltage	2.5 kV (IEC60664-1/60947-5-1)
Pollution Degree	3 (IEC60947-5-1)
Vibration Resistance	Operating extremes: 5 to 55Hz, amplitude 0.5 mm
Shock Resistance	Operating extremes: 100 m/s^2 Damage limits: 1000 m/s^2
Mechanical Life (minimum operations)	Pushbutton, illuminated pushbutton: 2,000,000 Selector switch: 250,000 Key selector switch: 250,000
Electrical Life (minimum operations)	50,000 (see Contact Ratings) 100,000 (see Contact Ratings) (switching frequency 1800 operations/h)
Degree of Protection (IEC60529)	Panel front: IP65 Type 4X Terminals: IP20
Short-circuit Protection	250V/10A fuse, (Type aM IEC60269-1, IEC602069-2)
Electrical Shock Protection	Class II (IEC61140)
Terminal Style	Screw terminal (M3.5 slotted Phillips screw)
Bezel Material	Polyamide
Applicable Wire Size	Up to 2 wires of 2 mm^2 (solid wire ø1.6) maximum (AWG14 to 16) (Ring terminal cannot be used)
Recommended Tightening Torque	Terminal: 1.0 to 1.3 N·m Locking ring: 1.2 N·m

Contact Ratings

Rated Insulation Voltage (Ui)				300V		
Rated Thermal Current (Ith)				10A		
Rated Operating Voltage (Ue)				24V	120V	240V
Rated Operating Current (Ie)	Electrical Life 50,000 operations	AC 50/60 Hz	Resistive Load (AC-12)	10A	10A	6A
			Inductive Load (AC-15)	10A	6A	3A
		DC	Resistive Load (DC-12)	8A	2.2A	1.1A
			Inductive Load (DC-13)	4A	1.1A	0.55A
	Electrical Life 100,000 operations	AC 50/60 Hz	Resistive Load (AC-12)	5A	5A	3A
			Inductive Load (AC-15)	5A	3A	1.5A
		DC	Resistive Load (DC-12)	4A	1.1A	0.55A
			Inductive Load (DC-13)	2A	0.55A	0.27A
Contact Material				Silver		

1. Minimum applicable load (reference value): 3V AC/DC, 5 mA (Applicable range is subject to the operating conditions and load.)
2. The operational current represents the classification by making and breaking currents (IEC 60947-5-1).
3. UL, c-UL rating: A300

Direct Opening of Key Selector Switch

	2-position (3NC)	3-position (2NC)
Operator Angle for Direct Opening Action	90°	45°
Minimum Operator Torque for Direct Opening Action	0.2 N·m	0.3 N·m
Maximum Operator Angle	90°	45°

chanhvinh.com

Weights

Illuminated Pushbutton	46g (CW1L-M1E02QH, 2 contact blocks)
Pushbutton	45g (CW1B-M1E03, 3 contact blocks)
Pilot Light	27g (CW1P-1EQH)
Selector Switch	48g (CW1S-2E03, 3 contact blocks)
Key Selector Switch	61g (CW1K-2E03, 3 contact blocks)

LED Module

Rated Insulation Voltage (Ui)	250V				
Rated Operating Voltage (Ue)	6V AC/DC	12V AC/DC	24V AC/DC	100/120V AC	230/240V AC
Operating Voltage Range	6V AC/DC±10%	12V AC/DC±10%	24V AC/DC±10%	100/120V AC±10%	230/240V AC±10%
Illumination Color Code ②	A (amber), G (green), PW (white), R (red), S (blue)				
LED Module Part Number	CW-EAQ2②	CW-EAQ3②	CW-EAQ4②	CW-EAQH②	CW-EAQM4②
Current Draw	15 mA	15 mA	16.5 mA	18 mA	18 mA
Life (reference value)	Approx. 30,000 hours				
Internal Circuit	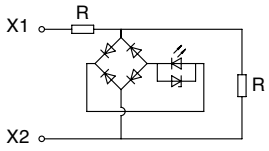			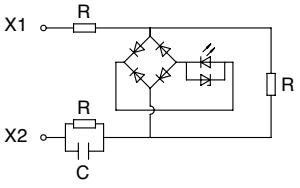	

1. Specify an illumination color code in place of ② in the part number.
2. Use the white (PW) LED module for yellow illumination.

Mounting Hole Layout
IEC 60947-5-1 compliant

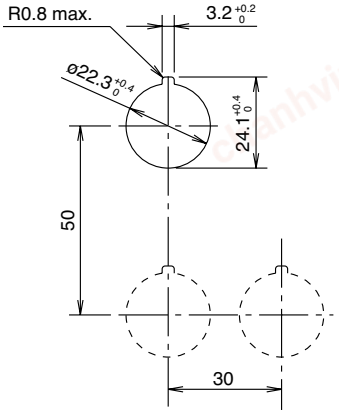

Note: Determine mounting centers to ensure proper spacing.

chanhvinh.com

Illuminated Pushbuttons (Assembled)

Style	Operating Voltage	Contact Configuration	Black Bezel	Metallic Bezel	Illumination Color Code ②
Round Flush CW□L-□1  (black bezel)  (metallic bezel)	6V AC/DC	1NO	CW1L-③1E10Q2②	CW4L-③1E10Q2②	A: amber G: green PW: white R: red S: blue Y: yellow
		1NC	CW1L-③1E01Q2②	CW4L-③1E01Q2②	
		1NO-1NC	CW1L-③1E11Q2②	CW4L-③1E11Q2②	
		2NO	CW1L-③1E20Q2②	CW4L-③1E20Q2②	
		2NC	CW1L-③1E02Q2②	CW4L-③1E02Q2②	
	12V AC/DC	1NO	CW1L-③1E10Q3②	CW4L-③1E10Q3②	
		1NC	CW1L-③1E01Q3②	CW4L-③1E01Q3②	
		1NO-1NC	CW1L-③1E11Q3②	CW4L-③1E11Q3②	
		2NO	CW1L-③1E20Q3②	CW4L-③1E20Q3②	
		2NC	CW1L-③1E02Q3②	CW4L-③1E02Q3②	
	24V AC/DC	1NO	CW1L-③1E10Q4②	CW4L-③1E10Q4②	
		1NC	CW1L-③1E01Q4②	CW4L-③1E01Q4②	
		1NO-1NC	CW1L-③1E11Q4②	CW4L-③1E11Q4②	
		2NO	CW1L-③1E20Q4②	CW4L-③1E20Q4②	
		2NC	CW1L-③1E02Q4②	CW4L-③1E02Q4②	
	100/120V AC	1NO	CW1L-③1E10QH②	CW4L-③1E10QH②	
		1NC	CW1L-③1E01QH②	CW4L-③1E01QH②	
		1NO-1NC	CW1L-③1E11QH②	CW4L-③1E11QH②	
		2NO	CW1L-③1E20QH②	CW4L-③1E20QH②	
		2NC	CW1L-③1E02QH②	CW4L-③1E02QH②	
	230/240V AC	1NO	CW1L-③1E10QM4②	CW4L-③1E10QM4②	
		1NC	CW1L-③1E01QM4②	CW4L-③1E01QM4②	
		1NO-1NC	CW1L-③1E11QM4②	CW4L-③1E11QM4②	
		2NO	CW1L-③1E20QM4②	CW4L-③1E20QM4②	
		2NC	CW1L-③1E02QM4②	CW4L-③1E02QM4②	
Round Extended CW□L-□2  (black bezel)  (metallic bezel)	6V AC/DC	1NO	CW1L-③2E10Q2②	CW4L-③2E10Q2②	A: amber G: green PW: white R: red S: blue Y: yellow
		1NC	CW1L-③2E01Q2②	CW4L-③2E01Q2②	
		1NO-1NC	CW1L-③2E11Q2②	CW4L-③2E11Q2②	
		2NO	CW1L-③2E20Q2②	CW4L-③2E20Q2②	
		2NC	CW1L-③2E02Q2②	CW4L-③2E02Q2②	
	12V AC/DC	1NO	CW1L-③2E10Q3②	CW4L-③2E10Q3②	
		1NC	CW1L-③2E01Q3②	CW4L-③2E01Q3②	
		1NO-1NC	CW1L-③2E11Q3②	CW4L-③2E11Q3②	
		2NO	CW1L-③2E20Q3②	CW4L-③2E20Q3②	
		2NC	CW1L-③2E02Q3②	CW4L-③2E02Q3②	
	24V AC/DC	1NO	CW1L-③2E10Q4②	CW4L-③2E10Q4②	
		1NC	CW1L-③2E01Q4②	CW4L-③2E01Q4②	
		1NO-1NC	CW1L-③2E11Q4②	CW4L-③2E11Q4②	
		2NO	CW1L-③2E20Q4②	CW4L-③2E20Q4②	
		2NC	CW1L-③2E02Q4②	CW4L-③2E02Q4②	
	100/120V AC	1NO	CW1L-③2E10QH②	CW4L-③2E10QH②	
		1NC	CW1L-③2E01QH②	CW4L-③2E01QH②	
		1NO-1NC	CW1L-③2E11QH②	CW4L-③2E11QH②	
		2NO	CW1L-③2E20QH②	CW4L-③2E20QH②	
		2NC	CW1L-③2E02QH②	CW4L-③2E02QH②	
	230/240V AC	1NO	CW1L-③2E10QM4②	CW4L-③2E10QM4②	
		1NC	CW1L-③2E01QM4②	CW4L-③2E01QM4②	
		1NO-1NC	CW1L-③2E11QM4②	CW4L-③2E11QM4②	
		2NO	CW1L-③2E20QM4②	CW4L-③2E20QM4②	
		2NC	CW1L-③2E02QM4②	CW4L-③2E02QM4②	

1. Specify an illumination color code in place of ② in the Part Number.
2. Specify function code in place of ③ in the Part Number. M: momentary, A: maintained
3. See page 543 for dimensions.
4. See next page for replacement LED modules.
5. A dummy block is installed when one contact block is used.

chanhvinh.com

Illuminated Pushbuttons (Sub-assembled)

Contact Blocks	+	LED Module	+	Mounting Adapter	+	Operator	+	Lens	=	Completed Unit








Contact Blocks

Style	Contacts	1NO	1NC
	Finger-safe screw terminal	YW-E10R	YW-E01
	Dummy Block	CW-DB	

LED Module

Style	Part Number
	CW-EAQ ②①

1. In place of ①, specify the Lens/LED Color Code from table.
2. In place of ②, specify the Voltage Code from table.
3. Use PW LED for yellow lens.

Contact Block Mounting Adaptor

Style	Part Number
	CW-CN

Operators

Style			Black Bezel	Metallic Bezel
	Momentary	Round Flush	CW1L-M10	CW4L-M10
		Round Extended	CW1L-M20	CW4L-M20
	Maintained	Round Flush	CW1L-A10	CW4L-A10
		Round Extended	CW1L-A20	CW4L-A20

Lens

Style		Part Number
	Round Flush	CW9Z-L11①
	Round Extended	CW9Z-L12①

1. In place of ①, specify the Lens/LED Color Code from table.

① Lens/LED Color Code

Color	Code
Amber	A
Green	G
Red	R
Blue	S
White	PW
Yellow	Y

② Voltage Code

Voltage	Code
6V AC/DC	2
12V AC/DC	3
24V AC/DC	4
100/120V AC	H
230/240V AC	M4

chanhvinh.com

Non-Illuminated Pushbuttons (Assembled)

Style	Contact Configuration	Black Bezel	Metallic Bezel	Button Color Code ①
Round Flush CW□B-□1  (black bezel)	1NO	CW1B-③1E10①	CW4B-③1E10①	B: black G: green R: red S: blue W: white Y: yellow
	1NC	CW1B-③1E01①	CW4B-③1E01①	
	1NO-1NC	CW1B-③1E11①	CW4B-③1E11①	
	2NO	CW1B-③1E20①	CW4B-③1E20①	
	2NC	CW1B-③1E02①	CW4B-③1E02①	
	2NO-1NC*	CW1B-M1E21①	CW4B-M1E21①	
	1NO-2NC*	CW1B-M1E12①	CW4B-M1E12①	
	3NO*	CW1B-M1E30①	CW4B-M1E30①	
	3NC*	CW1B-M1E03①	CW4B-M1E03①	
Round Extended CW□B-□2  (metallic bezel)	1NO	CW1B-③2E10①	CW4B-③2E10①	
	1NC	CW1B-③2E01①	CW4B-③2E01①	
	1NO-1NC	CW1B-③2E11①	CW4B-③2E11①	
	2NO	CW1B-③2E20①	CW4B-③2E20①	
	2NC	CW1B-③2E02①	CW4B-③2E02①	
	2NO-1NC*	CW1B-M2E21①	CW4B-M2E21①	
	1NO-2NC*	CW1B-M2E12①	CW4B-M2E12①	
	3NO*	CW1B-M2E30①	CW4B-M2E30①	
	3NC*	CW1B-M2E03①	CW4B-M2E03①	

1. Specify a button color code in place of ① in the part number.
2. Specify function code in place of ③ in the Part Number. M: momentary, A: maintained
3. See page 543 for dimensions.
4. Two or one dummy block is installed when one or two contact blocks are used, respectively.

*These contact configurations are not available in maintained action

Non-Illuminated Pushbuttons (Sub-assembled)

Contact Blocks	+	LED Module	+	Lens	=	Completed Unit
						

Contact Blocks

Style	Contacts	1NO	1NC
	Finger-safe screw terminal	YW-E10R	YW-E01
	Dummy Block	CW-DB	

Operators*

Style			Black Bezel	Metallic Bezel
	Momentary	Round Flush	CW1B-M1①	CW4B-M1①
		Round Extended	CW1B-M2①	CW4B-M2①
	Maintained	Round Flush	CW1B-A1①	CW4B-A1①
		Round Extended	CW1B-A2①	CW4B-A2①

1. Specify a button color code in place of ①.
2. *Operator button is not removable from operator.

① Button Color Code

Color	Code
Black	B
Green	G
Red	R
Blue	S
White	W
Yellow	Y

Contact Block Mounting Adaptor

Style	Part Number
	CW-CN

chanhvinh.com

Pilot Lights (Assembled)

Style	Operating Voltage	Black Bezel	Metallic Bezel	Illumination Color Code ②
Round Flush Lens CW□P-1  (black bezel)	6V AC/DC	CW1P-1EQ2②	CW4P-1EQ2②	A: amber G: green R: red S: blue PW: white Y: yellow
	12V AC/DC	CW1P-1EQ3②	CW4P-1EQ3②	
	24V AC/DC	CW1P-1EQ4②	CW4P-1EQ4②	
	100/120V AC	CW1P-1EQH②	CW4P-1EQH②	
	230/240V AC	CW1P-1EQM4②	CW4P-1EQM4②	
Round Dome Lens CW□P-2  (metallic bezel)	6V AC/DC	CW1P-2EQ2②	CW4P-2EQ2②	
	12V AC/DC	CW1P-2EQ3②	CW4P-2EQ3②	
	24V AC/DC	CW1P-2EQ4②	CW4P-2EQ4②	
	100/120V AC	CW1P-2EQH②	CW4P-2EQH②	
	230/240V AC	CW1P-2EQM4②	CW4P-2EQM4②	

1. Specify an illumination color code in place of ② in the Part Number
2. See page 543 for dimensions.
3. See page 545 for replacement LED modules.
4. Two dummy blocks are installed.

Pilot Lights (Sub-assembled)

Contact Blocks*	+	LED Module	+	Mounting Adapter	+	Operator	+	Lens	=	Completed Unit
										

* 2 dummy blocks are required for each completed pilot light.

Contact Block

Style	Contacts	Part Number
	Dummy Block	CW-DB

LED Module

Style	Part Number
	CW-EAQ ②①

1. In place of ①, specify the Lens/LED Color Code from table.
2. In place of ②, specify the Voltage Code from table.
3. Use PW LED for yellow lens.

Contact Block Mounting Adaptor

Style	Part Number
	CW-CN

Operators

Style	Black Bezel	Metallic Bezel
	CW1P-00	CW4P-00

Lens

Style		Part Number
	Round Flush	CW9Z-L11①
	Round Dome	CW9Z-L15①

1. In place of ①, specify the Lens/LED Color Code from table.

① Lens/LED Color Code

Color	Code
Amber	A
Green	G
Red	R
Blue	S
White	PW
Yellow	Y

② Voltage Code

Voltage	Code
6V AC/DC	2
12V AC/DC	3
24V AC/DC	4
100/120V AC	H
230/240V AC	M4

Selector Switches (Assembled)

Shape	CW□S (Knob Operator)	 (black bezel)	 (metallic bezel)		

No. of Positions	Contact Configuration	Contact Block		Operator Position		L R Maintained	L R Spring return from right
		Mounting Position	Type	L	R		
90° 2-position	1NO (10)	1	NO		●	CW□S-2E10	CW□S-21E10
		2	—	Dummy			
		3	—	Dummy			
	1NC (01)	1	—	Dummy		CW□S-2E01	CW□S-21E01
		2	—	Dummy			
		3	NC	●			
	1NO-1NC (11)	1	NO		●	CW□S-2E11	CW□S-21E11
		2	—	Dummy			
		3	NC	●			
	2NO (20)	1	NO		●	CW□S-2E20	CW□S-21E20
		2	—	Dummy			
		3	NO		●		
	2NC (02)	1	NC	●		CW□S-2E02	CW□S-21E02
		2	—	Dummy			
		3	NC	●			
	2NO-1NC (21)	1	NO		●	CW□S-2E21	CW□S-21E21
		2	NO		●		
		3	NC	●			
	1NO-2NC (12)	1	NO		●	CW□S-2E12	CW□S-21E12
		2	NC	●			
		3	NC	●			
	3NO (30)	1	NO		●	CW□S-2E30	CW□S-21E30
		2	NO		●		
		3	NO		●		
	3NC (03)	1	NC	●		CW□S-2E03	CW□S-21E03
		2	NC	●			
		3	NC	●			

1. Specify a bezel color code in place of □ in the part number: 1 (black bezel), 4 (metallic bezel).
2. Lever operator is also available. For dimensions, see page 544.
3. To order a lever operator selector switch, insert L before E in the knob operator part number. Example: Knob Operator part number CW1S-2E10 becomes CW1S-2LE10 for Lever Operator.

Lever Operator



CW1S-□L
(black bezel)



CW4S-□L
(metallic bezel)

Contact Block Mounting Position



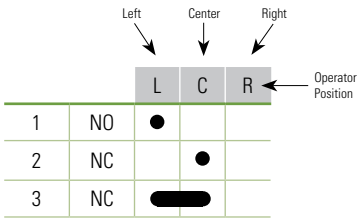

No. of Positions	Contact Configuration	Contact Block: Mounting Position	Contact Block: Type	Operator Position: L	Operator Position: C	Operator Position: R	L C R Maintained	L C R Spring return from right	L C R Spring return from left	L C R Spring return two-way
45° 3-position	1NO-1NC (11)	1	NO	●			CW□S-3E11	CW□S-31E11	CW□S-32E11	CW□S-33E11
		2	—		Dummy					
		3	NC	▬						
	1NO-1NC (11N1)	1	NC		▬		CW□S-3E11N1	CW□S-31E11N1	CW□S-32E11N1	CW□S-33E11N1
		2	—		Dummy					
		3	NO			●				
	1NO-1NC (11N2)	1	NO	●			CW□S-3E11N2	CW□S-31E11N2	CW□S-32E11N2	CW□S-33E11N2
		2	NC		●					
		3	—		Dummy					
	1NO-1NC (11N3)	1	—		Dummy		CW□S-3E11N3	CW□S-31E11N3	CW□S-32E11N3	CW□S-33E11N3
		2	NC		●					
		3	NO			●				
	1NO-1NC (11N4)	1	—		Dummy		CW□S-3E11N4	CW□S-31E11N4	CW□S-32E11N4	CW□S-33E11N4
		2	NO	●		●				
		3	NC	▬						
	2NO (20)	1	NO	●			CW□S-3E20	CW□S-31E20	CW□S-32E20	CW□S-33E20
		2	—		Dummy					
		3	NO			●				
	2NO (20N1)	1	—		Dummy		CW□S-3E20N1	CW□S-31E20N1	CW□S-32E20N1	CW□S-33E20N1
		2	NO	●		●				
		3	NO			●				
	2NC (02)	1	NC		▬		CW□S-3E02	CW□S-31E02	CW□S-32E02	CW□S-33E02
		2	—		Dummy					
		3	NC	▬						
	2NC (02N1)	1	—		Dummy		CW□S-3E02N1	CW□S-31E02N1	CW□S-32E02N1	CW□S-33E02N1
		2	NC		●					
		3	NC	▬						
	2NO-1NC (21)	1	NO	●			CW□S-3E21	CW□S-31E21	CW□S-32E21	CW□S-33E21
		2	NO	●		●				
		3	NC	▬						
	2NO-1NC (21N1)	1	NO	●			CW□S-3E21N1	CW□S-31E21N1	CW□S-32E21N1	CW□S-33E21N1
		2	NC		●					
		3	NO			●				
	1NO-2NC (12)	1	NO	●			CW□S-3E12	CW□S-31E12	CW0S-32E12	CW□S-33E12
		2	NC		●					
		3	NC	▬						
	1NO-2NC (12N1)	1	NC		▬		CW□S-3E12N1	CW□S-31E12N1	CW□S-32E12N1	CW□S-33E12N1
		2	NO	●		●				
		3	NC	▬						
	3NO (30)	1	NO	●			CW□S-3E30	CW□S-31E30	CW□S-32E30	CW□S-33E30
		2	NO	●		●				
		3	NO			●				
	3NC (03)	1	NC		▬		CW□S-3E03	CW□S-31E03	CW□S-32E03	CW□S-33E03
		2	NC		●					
		3	NC	▬						

1. Specify a bezel color code in place of □ in the Part Number, 1 (black bezel), 4 (metallic bezel)
2. For the contact block mounting position, see page 540.
3. Lever operator is also available. For dimensions, see page 544.
4. To order a lever operator selector switch, insert L before E in the knob operator part number.
Example: Knob Operator part number CW1S-3E11 becomes CW1S-3LE11 for Lever Operator.

chanhvinh.com

Selector Switches (Sub-assembled)

Contact Block	+	Mounting Adaptor	+	Operator	=	Completed Unit



Contact Blocks

Style	Contacts	1NO	1NC
	Finger-safe screw terminal	YW-E10R	YW-E01
	Dummy Block	CW-DB	

Contact Block Mounting Adaptor

Style	Part Number
	CW-CN

Operators

Style	Position	Handle	Description	Black Bezel	Metallic Bezel
 (knob operator shown)	2 position	Knob	Maintained	CW1S-2	CW4S-2
			Spring return from right	CW1S-21	CW4S-21
		Lever	Maintained	CW1S-2L	CW4S-2L
			Spring return from right	CW1S-21L	CW4S-21L
	3 position	Knob	Maintained	CW1S-3	CW4S-3
			Spring return from right	CW1S-31	CW4S-31
			Spring return from left	CW1S-32	CW4S-32
			Spring return two-way	CW1S-33	CW4S-33
		Lever	Maintained	CW1S-3L	CW4S-3L
			Spring return from right	CW1S-31L	CW4S-31L
			Spring return from left	CW1S-32L	CW4S-32L
			Spring return two-way	CW1S-33L	CW4S-33L

Lever or knob is supplied with operator.

Key Selector Switches (Assembled)

Shape: CW□K



(black bezel)



(metallic bezel)

No. of Positions	Contact Configuration	Contact Block: Mounting Position	Contact Block: Type	Operator Position: L	Operator Position: R	Maintained (L R)	Spring return from right (L R)
90° 2-position	1NO (10)	1	NO		●	CW□K-2AE10	CW□K-21BE10
		2	—	Dummy			
		3	—	Dummy			
	1NC (01)	1	—	Dummy		CW□K-2AE01	CW□K-21BE01
		2	—	Dummy			
		3	NC	●			
	1NO-1NC (11)	1	NO		●	CW□K-2AE11	CW□K-21BE11
		2	—	Dummy			
		3	NC	●			
	2NO (20)	1	NO		●	CW□K-2AE20	CW□K-21BE20
		2	—	Dummy			
		3	NO		●		
	2NC (02)	1	NC	●		CW□K-2AE02	CW□K-21BE02
		2	—	Dummy			
		3	NC	●			
	2NO-1NC (21)	1	NO		●	CW□K-2AE21	CW□K-21BE21
		2	NO		●		
		3	NC	●			
	1NO-2NC (12)	1	NO		●	CW□K-2AE12	CW□K-21BE12
		2	NC	●			
		3	NC	●			
	3NO (30)	1	NO		●	CW□K-2AE30	CW□K-21BE30
		2	NO		●		
		3	NO		●		
	3NC (03)	1	NC	●		CW□K-2AE03	CW□K-21BE03
		2	NC	●			
		3	NC	●			

1. Specify a bezel color code in place of □ in the Part Number: 1 (black bezel), 4 (metallic bezel).
2. On the spring-returned models, the key can be released only from the maintained position. On the maintained models, the key can be released from any position. Key retained positions are also available. See below.
3. Two keys are supplied.
4. Key cylinder material: Metal
5. Besides the standard key (key number 0H), six other keys are also available. See below.
6. For the contact block mounting position, see page 541.
7. For dimensions, see page 544.
8. When ordering an optional key or optional key retained positions, specify designation codes as shown below:
   Example: CW1K-2AE10-1H

(blank): Standard key (0H, reversible)
1H to 2H: Reversible key
3H to 6H: Non-reversible key

Note:
Key number is indicated on the key cylinder.
Standard keys do not have a key number indication.

Key removal position code

2-position
- A: Removable in all positions
- B: Removable in left only
- C: Removable in right only

3-position
- A: Removable in all positions
- B: Removable in left and center
- C: Removable in right and center
- D: Removable in center only
- E: Removable in right and left
- G: Removable in left only
- H: Removable in right only

Note: Key is retained in all spring-returned positions.

No. of Positions	Contact Configuration	Contact Block		Operator Position			Maintained	Spring return from right	Spring return from left	Spring return two-way
		Mounting Position	Type	L	C	R				
45° 3-position	1NO-1NC (11)	1	NO	●			CW□K-3AE11	CW□K-31BE11	CW□K-32CE11	CW□K-33DE11
		2	—	Dummy						
		3	NC	▬						
	1NO-1NC (11N1)	1	NC		▬		CW□K-3AE11N1	CW□K-31BE11N1	CW□K-32CE11N1	CW□K-33DE11N1
		2	—	Dummy						
		3	NO			●				
	1NO-1NC (11N2)	1	NO	●			CW□K-3AE11N2	CW□K-31BE11N2	CW□K-32CE11N2	CW□K-33DE11N2
		2	NC		●					
		3	—	Dummy						
	1NO-1NC (11N3)	1	—	Dummy			CW□K-3AE11N3	CW□K-31BE11N3	CW□K-32CE11N3	CW□K-33DE11N3
		2	NC		●					
		3	NO			●				
	1NO-1NC (11N4)	1	—	Dummy			CW□K-3AE11N4	CW□K-31BE11N4	CW□K-32CE11N4	CW□K-33DE11N4
		2	NO	●		●				
		3	NC	▬						
	2NO (20)	1	NO	●			CW□K-3AE20	CW□K-31BE20	CW□K-32CE20	CW□K-33DE20
		2	—	Dummy						
		3	NO			●				
	2NO (20N1)	1	—	Dummy			CW□K-3AE20N1	CW□K-31BE20N1	CW□K-32CE20N1	CW□K-33DE20N1
		2	NO	●		●				
		3	NO			●				
	2NC (02)	1	NC		▬		CW□K-3AE02	CW□K-31BE02	CW□K-32CE02	CW□K-33DE02
		2	—	Dummy						
		3	NC	▬						
	2NC (02N1)	1	—	Dummy			CW□K-3AE02N1	CW□K-31BE02N1	CW□K-32CE02N1	CW□K-33DE02N1
		2	NC		●					
		3	NC	▬						
	2NO-1NC (21)	1	NO	●			CW□K-3AE21	CW□K-31BE21	CW□K-32CE21	CW□K-33DE21
		2	NO	●		●				
		3	NC	▬						
	2NO-1NC (21N1)	1	NO	●			CW□K-3AE21N1	CW□K-31BE21N1	CW□K-32CE21N1	CW□K-33DE21N1
		2	NC		●					
		3	NO			●				
	1NO-2NC (12)	1	NO	●			CW□K-3AE12	CW□K-31BE12	CW□K-32CE12	CW□K-33DE12
		2	NC		●					
		3	NC	▬						
	1NO-2NC (12N1)	1	NC		▬		CW□K-3AE12N1	CW□K-31BE12N1	CW□K-32CE12N1	CW□K-33DE12N1
		2	NO	●		●				
		3	NC	▬						
	3NO (30)	1	NO	●			CW□K-3AE30	CW□K-31BE30	CW□K-32CE30	CW□K-33DE30
		2	NO	●		●				
		3	NO			●				
	3NC (03)	1	NC		▬		CW□K-3AE03	CW□K-31BE03	CW□K-32CE03	CW□K-33DE03
		2	NC		●					
		3	NC	▬						

1. Specify a bezel color code in place of □ in the Part Number: 1 (black bezel), 4 (metallic bezel)
2. On the spring-returned types, the key can be released only from the maintained position. On the maintained types, the key can be released from every position. Key retained positions are also available. See page 540.
3. Two keys are supplied.
4. Key cylinder material: Metal
5. Besides the standard key (key number 0H), six other keys are also available. See page 540.
6. For the contact block mounting position, see right.
7. For dimensions, see page 544.

Contact Block Mounting Position



		Left (L)	Center (C)	Right (R)
1	NO	●		
2	NC		●	
3	NC	▬		

Operator Position

chanhvinh.com

Key Selector Switches (Sub-assembled)

Contact Block	+	Mounting Adaptor	+	Operator	=	Completed Unit






Contact Block

Style	Contacts	1NO	1NC
	Finger-safe screw terminal	YW-E10R	YW-E01
	Dummy Block	CW-DB	

Contact Block Mounting Adaptor

Style	Part Number
	CW-CN

Operator

Style	Position	Description	Black Bezel	Metallic Bezel
 	2 position	Maintained, key removable all positions	CW1K-2A	CW4K-2A
		Maintained, key removed left only	CW1K-2B	CW4K-2B
		Maintained, key removed right only	CW1K-2C	CW4K-2C
		Spring return from right	CW1K-21B	CW4K-21B
	3 position	Maintained, key removable all positions	CW1K-3A	CW1K-3A
		Maintained, key removed left and center only	CW1K-3B	CW4K-3B
		Maintained, key removed right and center only	CW1K-3C	CW4K-3C
		Maintained, key removed center only	CW1K-3D	CW4K-3D
		Maintained, key removed left and right only	CW1K-3E	CW4K-3E
		Maintained, key removed left only	CW1K-3G	CW4K-3G
		Maintained, key removed right only	CW1K-3H	CW4K-3H
		Spring return from right, key removed left and center only	CW1K-31B	CW4K-31B
		Spring return from right, key removed center only	CW1K-31D	CW4K-31D
		Spring return from right, key removed left only	CW1K-31G	CW4K-31G
		Spring return from left, key removed right and center only	CW1K-32C	CW4K-32C
		Spring return from left, key removed center only	CW1K-32D	CW4K-32D
		Spring return from left, key removed right only	CW1K-32H	CW4K-32H
		Spring return two-way, key removed center only	CW1K-33D	CW4K-33D

2 keys supplied with operator.

Illuminated Pushbuttons

Round Flush

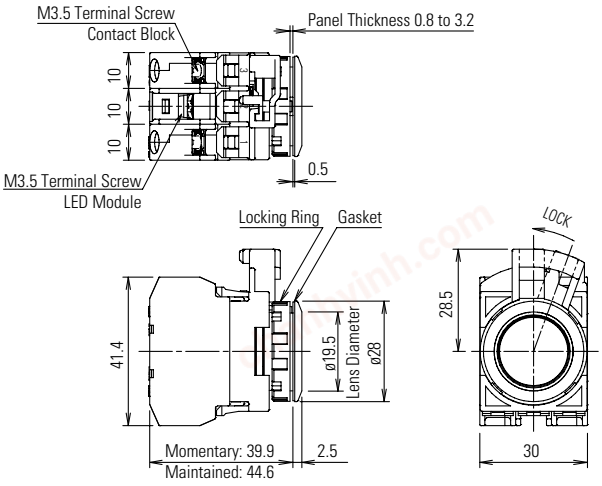

Round Extended

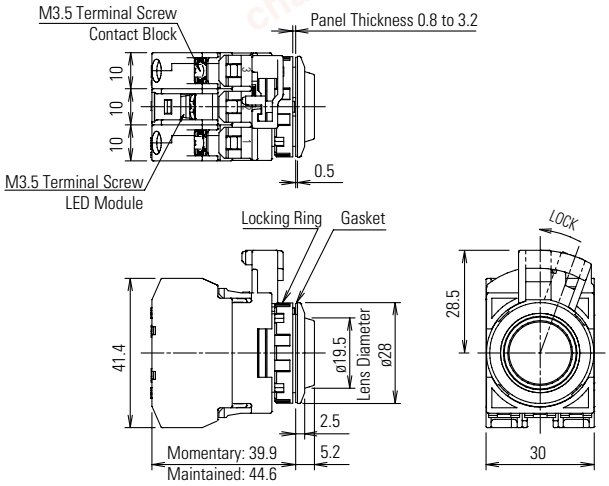

Pushbuttons

Round Flush

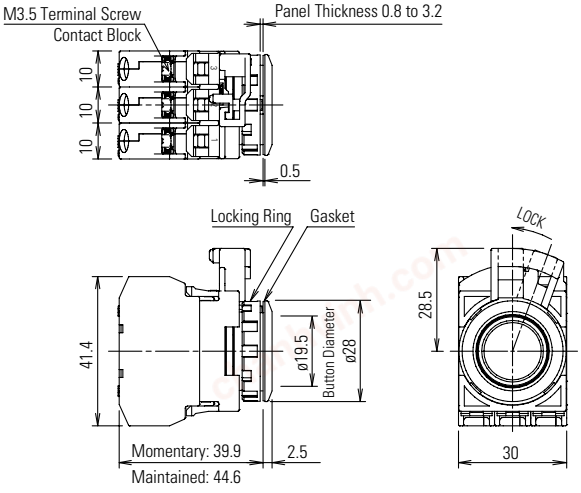

Round Extended

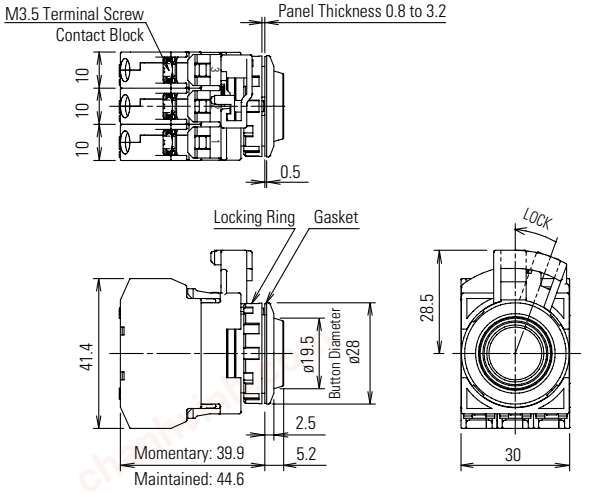

Pilot Lights

Round Flush

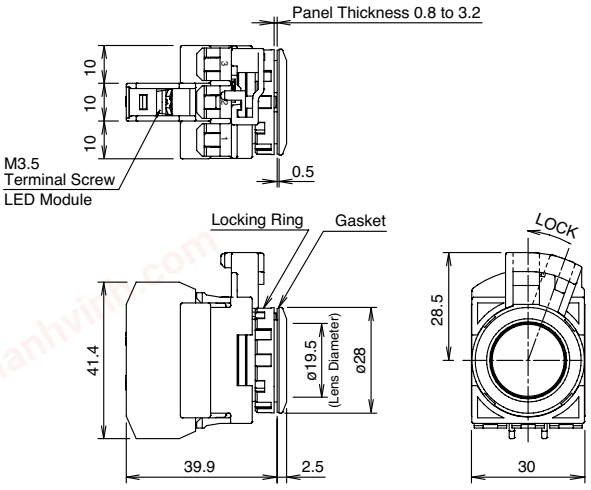

Round Dome

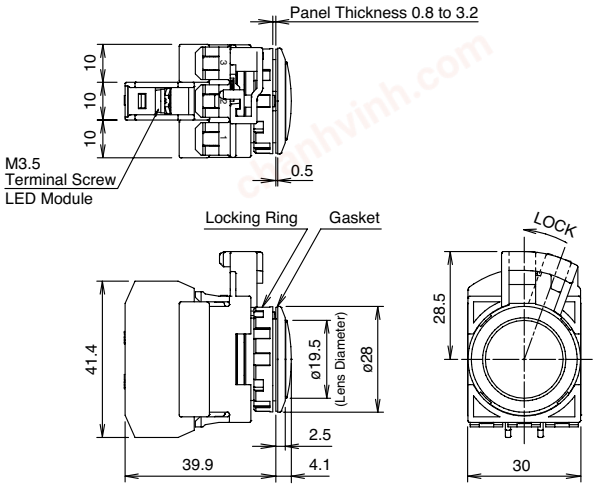

Selector Switches

Knob Operator

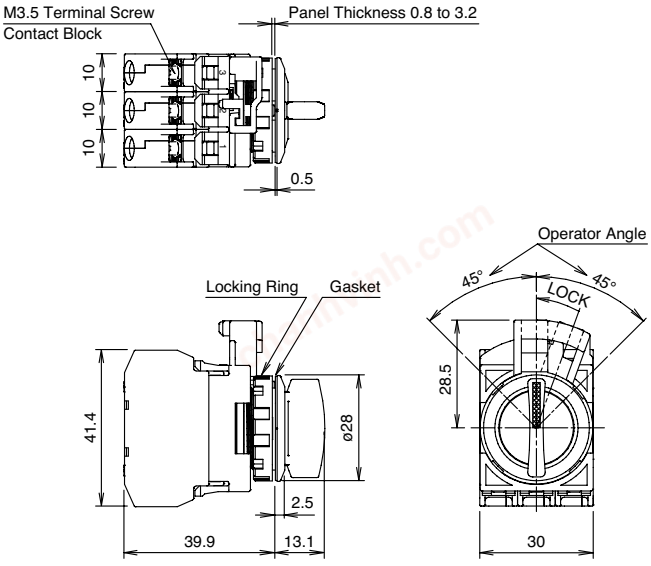

Lever Operator

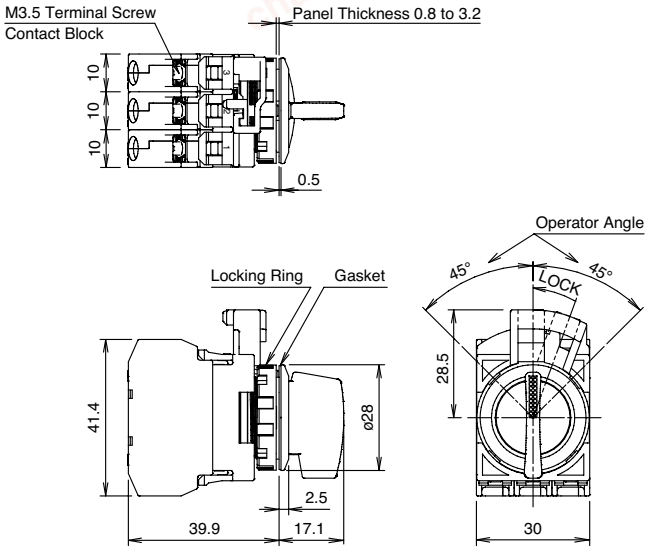

Key Selector Switches

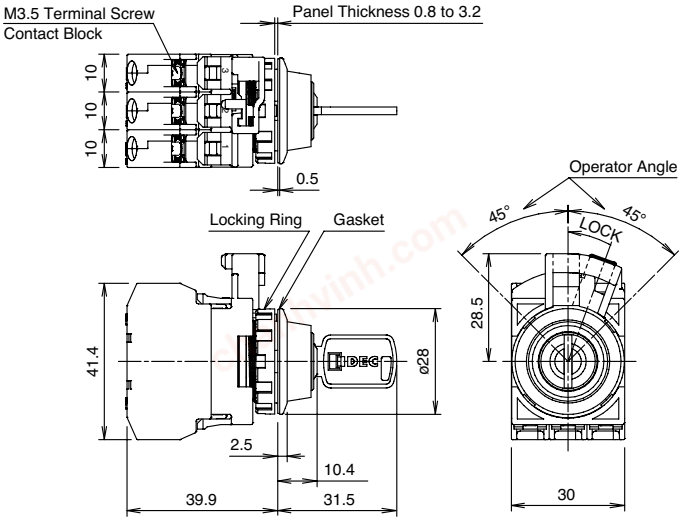

Key No.: 0H to 2H (reversible key)

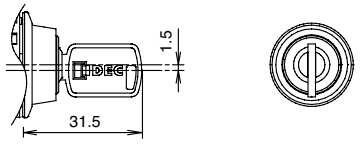

Key No.: 3H to 6H (non-reversible key)

Keys

Reversible Key

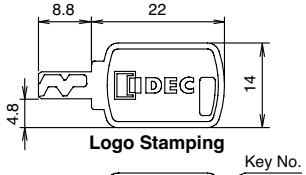

Logo Stamping

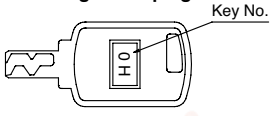

Key No. Stamping

Non-reversible Key

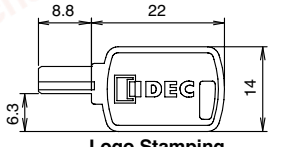

Logo Stamping

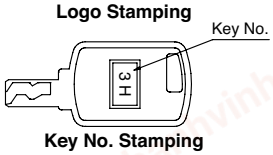

Key No. Stamping

chanhvinh.com

Accessories

Item	Appearance	Material	Part Number	Remarks
Locking Ring Wrench		Brass	MW9Z-T1	• Used to tighten the locking ring when installing the CW series control unit in a panel cut-out • Weight: Approx 150g 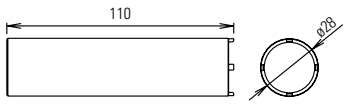
Mounting Hole Plug		Polyamide (black)	LW9Z-BP1	• Used to plug an unnecessary ø22.3mm hole in the panel • Degree of protection: IP65 • Panel thickness: 0.8 to 6.0mm

LED Modules

Shape	Operating Voltage Range	Current Draw	Part Number	Illumination Color Code ②
	6V AC/DC±10%	15 mA	CW-EAQ2②	Specify an illumination color code in place of ② in the Part Number A: amber G: green PW: white R: red S: blue
	12V AC/DC±10%	15 mA	CW-EAQ3②	
	24V AC/DC±10%	16.5 mA	CW-EAQ4②	
	100/120V AC±10%	18 mA	CW-EAQH②	
	230/240V AC±10%	18 mA	CW-EAQM4②	

Use a white (PW) LED module for yellow (Y) illumination.

Replacement Parts

Item		Material	Part Number	Remarks
Lens 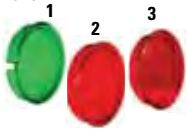	1 Round Flush	Polyalylate	CW9Z-L11②	Color code ②: A (amber), C (clear), G (green), R (red), S (blue), Y (yellow) Use a clear (C) lens for white (PW) illumination. 1: For illuminated pushbutton, pilot light 2: For illuminated pushbutton 3: For pilot light
	2 Round Extended	Polyalylate	CW9Z-L12②	
	3 Round Dome	Polyalylate	CW9Z-L15②	
Contact Blocks 		1NO	YW-E10R	Housing color: Blue/Black Terminal No.: 3-4
		1NC	YW-E01	Housing color: Reddish purple Terminal No.: 1-2
Dummy Block 		Polyamide (black)	CW-DB	
Locking Ring 		Polyamide (black)	CW9Z-LN	
Gasket 		Nitrile rubber	CW9Z-WM	Waterproof gasket between CW control unit bezel and the mounting panel.
Spare Key 		Zinc (nickel-plated)	LA9Z-SK-□	Specify a key No. in place of □. 0H: Standard key (reversible) 1H to 2H: Reversible key 3H to 6H: Non-reversible key For dimensions, see page 544.
Rubber Boot (clear) 			CW9Z-D11	Use for flush buttons and pilot lights.
			CW9Z-D12	Use for extended buttons and dome pilot.
Nameplate 		Plastic	CWAM-0B	

Nameplates - CW Series

Nameplate

CWAM–Black Plastic		
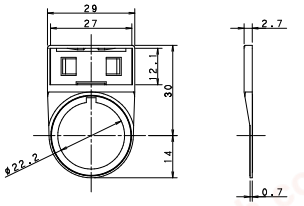		
Nameplate (blank engraving plate included)	CWAM-OB	
Nameplate (engraved)	CWAM-①	
Additional Insert (blank)	HWNP-O	HWNP Dimensions 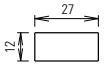
Additional Insert (engraved)	HWNP-①	

1. In place of ①, insert either the standard legend code from table below or custom engraving delimited by " ".
2. Standard engravings are available at no charge.

Standard Legend Codes

Pushbuttons				Pushbuttons/Selector Switches				Selector Switches	
Legend	Code	Legend	Code	Legend	Code	Legend	Code	Legend	Code
AUTO	101	OPEN	116	AUTO-MAN	201	REV-FOR	216	AUTO-MAN-OFF	301
CLOSE	102	OUT	117	CLOSE-OPEN	202	RUN-JOG	217	AUTO-OFF-MAN	302
DOWN	103	RAISE	118	DOWN-UP	203	RUN-SAFE	218	CLOSE-OFF-OPEN	303
EMERG.STOP	104	RESET	119	FAST-SLOW	204	SAFE-RUN	219	DOWN-OFF-SLOW	304
FAST	105	REVERSE	120	FOR-REV	205	SLOW-FAST	220	FAST-OFF-SLOW	305
FORWARD	106	RUN	121	HAND-AUTO	206	START-STOP	221	FOR-OFF-REV	306
HAND	107	SLOW	122	HIGH-LOW	207	STOP-START	222	LEFT-OFF-RIGHT	307
HIGH	108	START	123	JOG-RUN	208	UP-DOWN	223	LOWER-OFF-RAISE	308
IN	109	STOP	125	LEFT-RIGHT	209	OI (Int'l OFF ON)	250	OFF-MAN-AUTO	309
INCH	110	TEST	126	LOWER-RAISE	210			OFF-SLOW-FAST	310
JOG	111	UP	127	MAN-AUTO	211			OFF-1-2	311
LOW	112	I (Int'l On)	150	OFF-ON	212			OPEN-OFF-CLOSE	312
LOWER	113	O (Int'l Off)	151	ON-OFF	213			SLOW-OFF-FAST	313
OFF	114	EMO	152	OPEN-CLOSE	214			SUMMER-OFF-WINTER	314
ON	115			RAISE-LOWER	215			UP-OFF-DOWN	315
								1-OFF-2	316
								HAND-OFF-AUTO	317

1. To order engraved nameplates, add legend code to nameplate part number.
2. Character height based on the number of characters and size of nameplate. Standard character size is 3/16".
3. Nameplates with standard legends are the same list price as blank nameplates.

Nameplates Order Form — CW Series

Copy this order form and use it to specify Letter Height, Custom Engravings, Location of Engraving on Nameplate, and Quantity Desired.

To ensure engraving accuracy, fax it to your IDEC representative or Distributor.

Your Company: _____ IDEC Rep/Distributor Contact: _____

Name: _____ PO number (if known): _____

Telephone: _____ IDEC Rep/Distributor Phone: _____

Fax & Email: _____ IDEC Rep/Distributor Fax & Email: _____

CWAM Nameplate

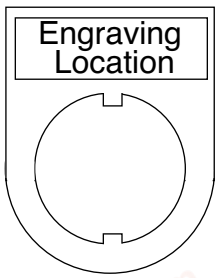

Step 1.
Choose Letter Size - 7/64" or 1/8".
Check the box for the letter size you want. Then write your lettering in box below the check boxes. Note: 1/8" size letters cannot exceed 9 characters.

7/64" Letter Size ☐ 11 characters maximum (for 7/64" size letters)

1/8" Letter Size ☐ 9 characters maximum (for 7/8" size letters)

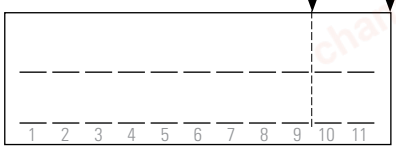

Sample Letter Sizes
7/64" Letters: A B C D
1/8" Letters: A B C D

Step 2.
Specify Quantity.
Enter the number of nameplates desired in the box on the right.

Qty ☐

chanhvinh.com

Safety Precautions

Turn off the power to CW series switches before installation, removal, wiring and maintenance. Failure to turn power off may cause electrical shocks or fire hazard.

When wiring, use wires of a proper size to meet the voltage and current requirements. Tighten the M3.5 terminal screws to a tightening torque of 1.0 to 1.3 N·m. Failure to tighten the terminal screws may cause overheating and fire.

Operating Instructions

Notes for Operation

When using the CW series switches in a safety-related circuit of a control system, observe safety rules and regulations of each country concerning particular applications of the actual machines and facilities. Perform risk assessment before operation to ensure safety.

Operating Conditions

In corrosive gas or high-temperature, high-humidity environments, contact failure due to corrosion or color change or breakage of the housing may occur.

Main parts of the CW series switches are made of plastic. Do not scratch the surface with a sharp object or apply excessive electric shock or load, otherwise the switches may be damaged. In particular, keep the button, lens and bezel from such damage, otherwise appearance and function may be impaired.

Do not apply detergents, cutting oils, or chemicals which may impair the function and appearance of the CW series switches.

Panel Mounting

First remove the contact block and then the locking ring from the operator. Insert the operator into the panel cut-out from the front, tighten the locking ring from the back, then install the contact block to the operator.

Mounting Hole

1. Mounting hole dimensions are in compliance with IEC60947-5-1.
2. If the anti-rotation projection is removed from the bezel, CW series switches can be mounted in ø22.3mm mounting holes. To remove the anti-rotation projection, remove the gasket and use cutting pliers to break the projection.

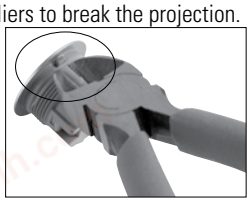

Removing and Installing the Contact Unit

1. To remove the contact block from the operator, push the yellow locking lever and turn it to the left.

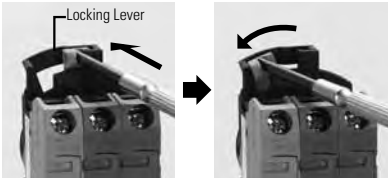

2. To install, align the TOP marking on the operator with the TOP marking on the contact block mounting adaptor, and turn the locking lever to the right.

Installation in Panel Cut-out

Remove the locking ring from the operator. With the anti-rotation projection on the operator aligned with the recess in the mounting hole, insert the operator into the mounting hole. Tighten the locking ring from the rear of the panel.

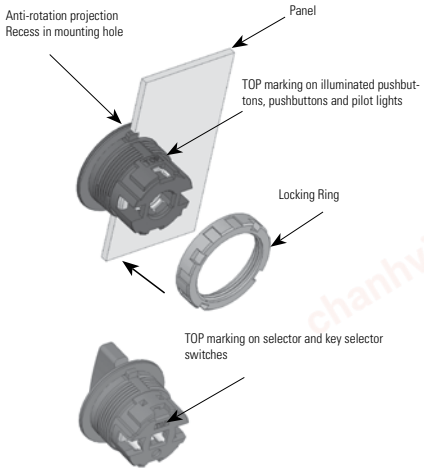

Note for Panel Mounting

When installing the operator in a panel cut-out, use the optional locking ring wrench (MW9Z-T1) to tighten the locking ring to a recommended tightening torque of 1.2 N·m. Do not use pliers and do not tighten excessively, otherwise the operator may be damaged.

Illuminated Pushbuttons and Pilot Lights

Removing the Lens

To remove the lens from an illuminated pushbutton or pilot light, insert a flat screwdriver under the flange of the lens at 90° from the TOP marking and twist the screwdriver.

Do not insert the screwdriver too far and do not apply excessive force to the lens, otherwise the bezel surface may be damaged.

Screwdriver Insertion Direction

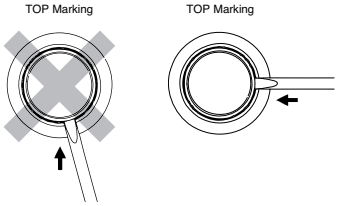

Screwdriver Insertion Angle

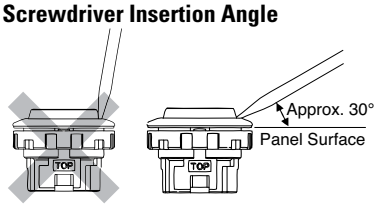

Installing the Lens

Turn the groove in the lens to the TOP marking on the operator housing. With the groove aligned with the ridge, press the lens in.

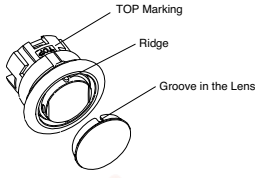

Marking

Marking film can be applied for inscriptions or identification.

Applicable Marking Film Size

Illuminated Pushbutton (Round Flush) Pilot Light (Round Flush, Round Extended)	Illuminated Pushbutton (Round Extended)
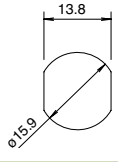	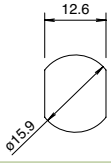

Thickness: 0.2 mm maximum
Film material: Polyester (recommended)
Note: Film is not supplied and must be provided by the user.

Operating Instructions, con't

Pushbuttons

Pushbutton caps cannot be removed. Do not tamper with the cap using a screwdriver or pliers, otherwise it may be damaged.

Selector Switches

Turn the selector operator or key to the detent positions.

Key Selector Switches

To prevent malfunction and damage, take the following precautions.

- Completely insert the key before turning.
- Do not remove the key while turning.
- Besides the standard key (0H), six other keys are available. Use only a key with a number that matches the number on the switches' key cylinder. (The standard key does not have a key number.)
- Keys are available in two shapes.
  -0H (standard), 1H, 2H: reversible keys
  -3H, 4H, 5H, 6H: non-reversible keys
  Make sure of correct insertion direction.

Contact Blocks and LED Modules

To remove the contact block from the operator, insert a flat screwdriver under the latch and push the screwdriver down as shown below. Before removing the LED module, first remove all contact blocks, and then remove the LED module in the same manner.

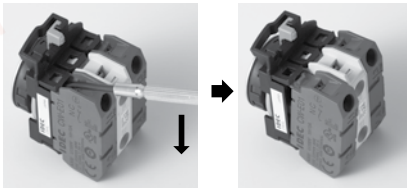

Wiring

Applicable Wires

Stranded wire: 2.0 mm2 maximum (14AWG)
Solid wire: ø1.6 mm maximum

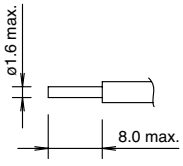

One or two wires can be connected to the terminal.

Applicable Crimping Terminals

Spade terminal
When using crimping terminals, be sure to use insulating tubes or insulated crimping terminals.

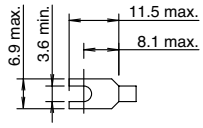

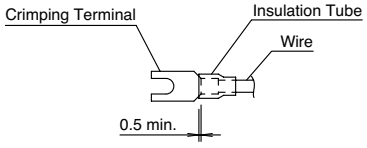

Ferrule
When connecting two ferrules to one terminal, use ferrules without insulation.

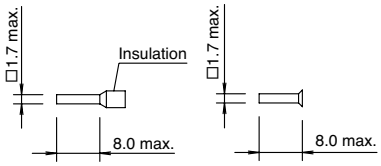

When using spade terminals or ferrules, ensure that they are inserted completely.
Ring terminals cannot be used.

Screw Tightening Torque

Tighten the M3.5 terminal screws to a recommended torque of 1.0 to 1.3 N·m.