chanhvinh.com

IDEC

S3 CONNECT

ø22 SWITCHES & PILOT LIGHTS
HW SERIES







Push-in Switches & Pilot Lights

Simple wiring with Push-in technology

IDEC CORPORATION

chanhvinh.com



S³ CONNECT

All thoughts focused on the same goal

Since the late 1970s, IDEC has continued to instill and pursue “Save and Safe”, as part of our corporate DNA. Along with the rapid advancement in machine intelligence and demands for environmental resistance and high reliability in recent years, we need to face societal issues such as shortage in workforce.
To solve these issues, we have set as our goals “Safe, Simple & Smart=S^3 (S cube)”, aiming to provide society with products and services that will bring about greater innovation and lasting quality.

Safe

Products anyone can use with safety and assurance, from a company seeking to be number one in safety

Simple

Products appreciated by all our customers for their ease of connection regardless of experience

Smart

Products that make labor-saving and space-saving a reality



Useful NEW

We provide easy and user-friendly products with new technology.

First in the industry
Six different colors with a single LED

Previously, 5 different color LEDs were required but with the new illuminated LED unit, only a single LED is used.
Only the lens needs to be replaced to change the illumination color.
The new LED reduces maintenance time, makes stock control easier, and is environmentally friendly.

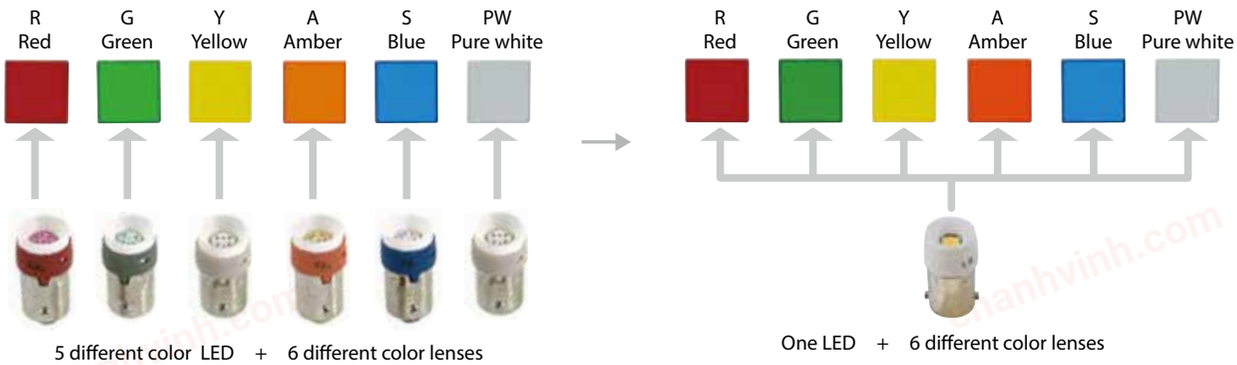

High visibility with new LED

Brighter and clearer compared to conventional LEDS

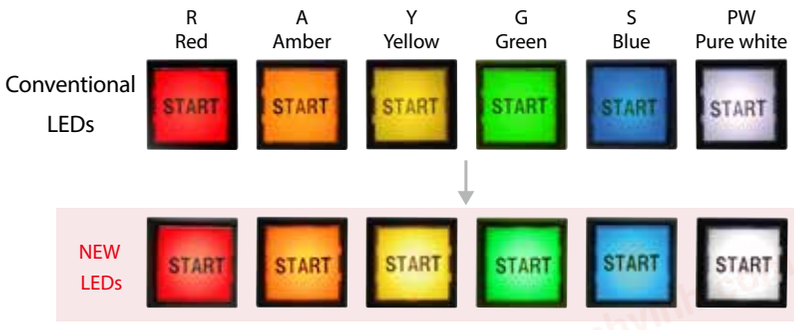

ISO3864-4
Safety color compliant

Safety colors are defined with ISO standards.
The bright and clears colors are suited for emergency situations

*Except for products below
•Illuminated selector switches (illumination color: S (Blue), PW (Pure white))
•Illuminated pushbuttons (illumination color: S (Blue))

chanhvinh.com

Push-in

Smart Simple

Simple wiring for greater work efficiency

Ferrules and solid wires can be connected simply by push-in insertion, without a screwdriver. (*1)
To remove, a flat-blade screwdriver is inserted in a simple two-action process.
Since wiring can be performed regardless of operators' skill level, wiring time is reduced.

*1) When connecting stranded wire, insert the wire while holding down the pusher with a flat-blade screwdriver.

Connecting

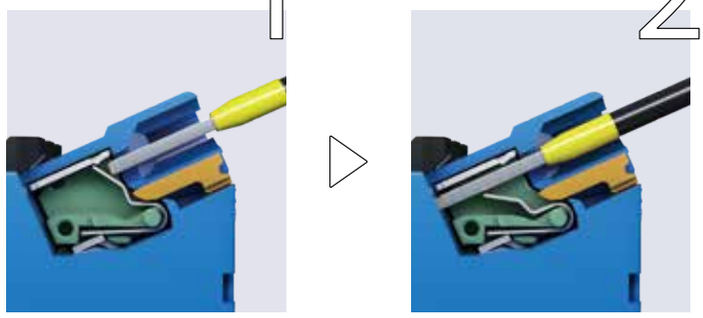

Push the wire straight in as far as it will go.

Connection is completed. Pull lightly to make sure it is firmly in place.

Removing

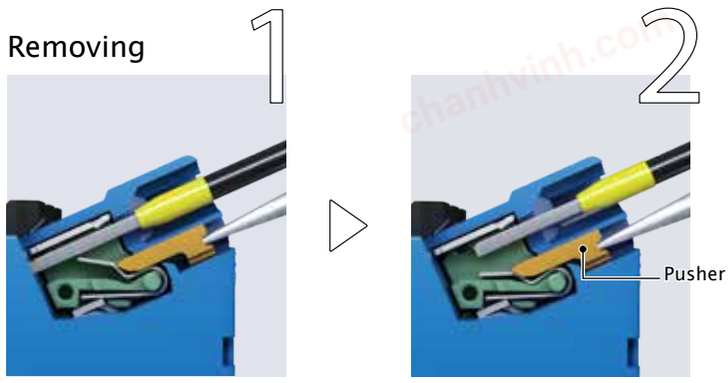

Hold down the pusher with a flat-blade screwdriver.

While holding down the pusher, pull out the wire. Release the flat-blade screwdriver.

Smart

Time saving and efficient

Push-in connections are made simple by inserting the wire, reducing wiring time by approximately 55% compared to conventional screw terminals.

[Conditions]
Push-in: Insert wire with ferrule.
Screw terminals: With screw loosened, insert wire, then tighten with electric driver.

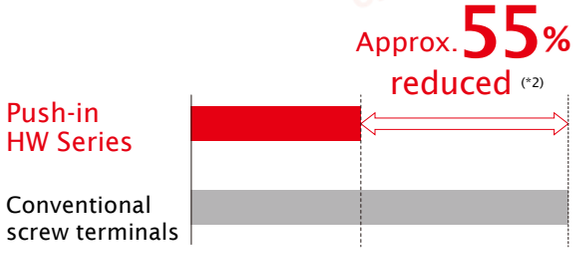

*2) As of IDEC research (as of January 2020)

Safe

Reliable and easy

Finger-safe structure and vibration resistance. What's more, the space-saving design means better workability in a smaller space.

Stays firmly in place
Since the ferrule is held in place by a spring load, the wiring remains taut and vibration resistance is improved.

Finger-safe structure
IP20 Finger-safe protection enables wiring to be performed without direct contact between screwdriver and conductive part.

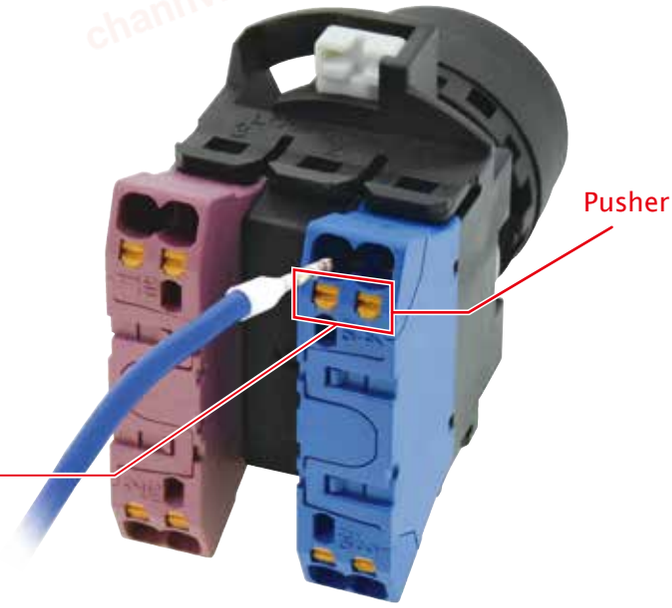

Smart Simple

Wiring procedure comparison

Work can be performed without using tools and regardless of operators' skill level.

*1) When ferrule is used.

Conventional screw terminal

Remove screw → Pass wire through crimping terminal → Tighten screw → Check

Push-in terminal (*1)

Insert wire → Simple one-step operation → Pull lightly to confirm

Smart

No additional tightening needed

Because screws are not used on push-in terminals, re-tightening of screws is not required.

chanhvinh.com

Product Upgrade

The superior functions of the conventional HW Series still remain while improving ease of use.

Space-Saving Smart

Contact block depth reduced

Saves space inside panel and enables downsizing of equipment.

Pilot light
full voltage type



Panel depth reduced by 50% DOWN



Conventional HW Series → Push-in HW Series

Illuminated pushbuttons
6V, 12V, 24V AC/DC



Panel depth reduced by 30% DOWN



Conventional HW Series → Push-in HW Series

NEW

Illuminated pushbuttons
100/120V AC/DC, 200/220V AC, 230/240V AC



Panel depth reduced by 40% DOWN



Conventional HW Series → Push-in HW Series

No transformers required for high voltage types

Smart Smart

High-voltage pilot lights
No transformer required

Applicable for a wide range of voltage (100/120V AC/DC, 200/240V AC).
Mounts directly on control and power panels without transformers.
Ideal for use in Europe and north America for applications requiring high voltage.



Locking lever

Usability improved by easy mounting and removal.
The mounting status of the contact blocks can be confirmed at a glance from the back of the switch.

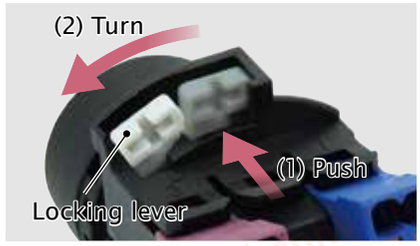

The specifications are the same as the conventional series, enabling easy installation

Panel design

Push-in design does not change the panel design.

Electrical rating and durability

Same electrical ratings and durability with push-in terminal contact blocks.

NEW

4-contact configuration available with double contact blocks

Double contact blocks available for all models including emergency stop switches, selector switches, key selector switches.

Double contact blocks



Single contact blocks





NEW

High voltage LED illuminated unit for illuminated pushbuttons

100/120V AC/DC, 200/220V AC, 230/240V AC types available. No transformers required and same depth behind the panel for for all illuminated voltages.
High voltage models do not require transformers enabling downsizing of equipment and panels.
1-contact types also available.

Conventional screw terminal

Push-in

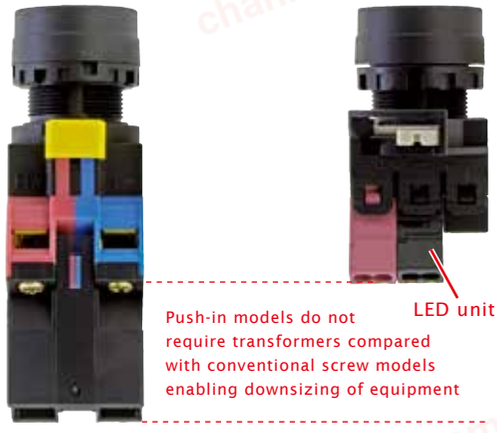

100/120V AC/DC, 200/220V AC, 230/240V AC types

Angled connections

Angled connections make wiring easy even when switches are mounted on a panel.
Also, 24-degree inclination faced to the panel improves the fit of the wires, and contributes to downsizing of the panel and equipment.

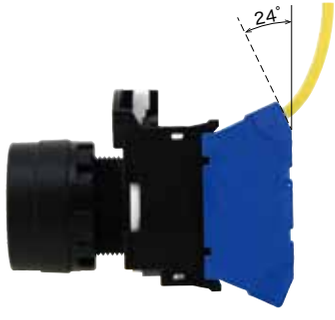

chanhvinh.com

Added Value

Our aim is to create products that enable customers to experience the utmost usability.

Test point

A test point is available to check connectivity of the wiring.
Check the connectivity easily using a tester.

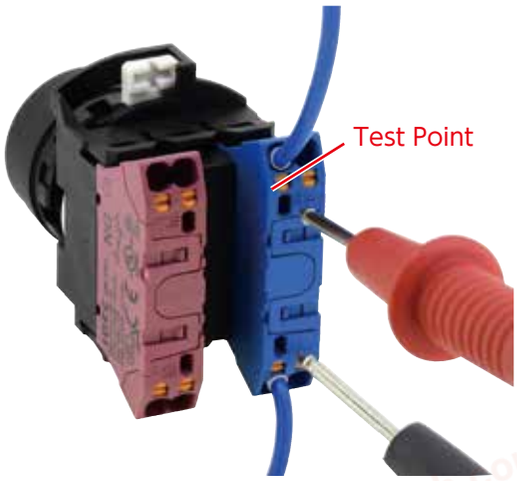

Sub-Assembled Units

Sub-assembled units can be ordered for flexible use, such as sudden changes in design.



chanhvinh.com

ø22 HW Series Push-in Switches & Pilot Lights

- Push-in terminal connection reduces wiring time.
- Safety enhanced with IP20 finger-safe protection.

- See website for details on approvals and standards.

Note) Approvals for pushbuttons, selector switches, pilot lights only.
For illuminated/non-illuminated buzzer (page 45) and emergency stop switches (page 46), see each page.

Specifications and Ratings

Contact Ratings

Pushbuttons Illuminated Pushbuttons Dual Pushbuttons Selector Switches Key Selector Switches Illuminated Selector Switches Selector Pushbuttons Monolever Switches Emergency Stop Switches	Rated insulation voltage	600V
	Rated continuous current	10A
	Contact ratings by utilization category IEC60947-5-1	AC-15 (A600) DC-13

- See website for approved contact ratings.

Rated Operating Voltage and Current by Utilization Category

HW-P10 (NO contact), HW-P01 (NC contact), HW-PW20 (2NO contact), HW-PW11 (1NO-1NC contact), HW-PW02 (2NC contact)

Operating Voltage			24V	48V	50V	110V	220V	440V
Operating Current	AC 50/60 Hz	AC-12 Control of resistive loads and solid state loads	10A	–	10A	10A	6A	2A
		AC-15 Control of electromagnetic loads (> 72 VA)	10A	–	7A	5A	3A	1A
	DC	DC-12 Control of resistive loads and solid state loads	10A	5A	–	2.2A	1.1A	–
		DC-13 Control of electromagnets	5A	2A	–	1.1A	0.6A	–

- The operating current represents making and breaking currents (IEC 60947-5-1).
- Contact materials: Silver contacts
- Minimum applicable load: 3V AC/DC, 5 mA (applicable range may vary with operating conditions)

Push-in Contact Block (HW-P)

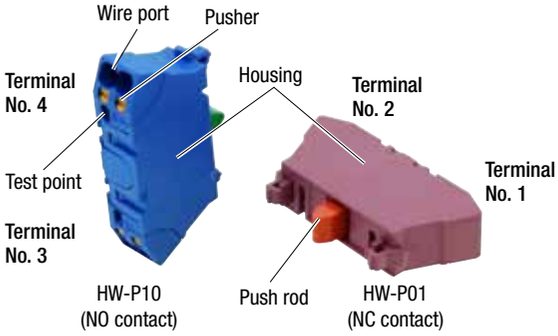

	Single Contact Block		Double Contact Block		
Contact	1NO	1NC	2NO	2NC	1NO-1NC
Part No.	**HW-P10**	**HW-P01**	**HW-PW20**	**HW-PW02**	**HW-PW11**
Shape					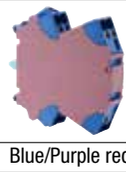
Housing	Blue	Purple red	Blue	Purple red	Blue/Purple red
Push Rod	Green	Red	Green	Red	Light Blue
Contact No.	3-4	1-2	1st deck: 13-14 2nd deck: 23-24	1st deck: 11-12 2nd deck: 21-22	1st deck: 13-14 2nd deck: 21-22
Weight	8g		16g		

LED Illuminated Part Specifications

Illuminated Pushbuttons, Illuminated Selector Switches, Dual Pushbuttons (with pilot light)

Rated Voltage	Operating Voltage		LED Lamp	
			Ramp Base	Part No.
6V AC/DC	6V AC/DC	±10%	BA9S/13	**LSRD-6**
12V AC/DC	12V AC/DC			**LSRD-1**
24V AC/DC	24V AC/DC			**LSRD-2**
100/120V AC/DC	100/120V AC/DC			**LSRD-H2**
200/220V AC	200/220V AC			**LSRD-M2**
230/240V AC	230/240V AC	207~250V		**LSRD-M4**

Pilot Light

Rated Voltage		Operating Voltage		LED Lamp	
				Ramp Base	Part No.
6V AC/DC		6V AC/DC	±10%	BA9S/13	**LSRD-6**
12V AC/DC		12V AC/DC			**LSRD-1**
24V AC/DC		24V AC/DC			**LSRD-2**
100/120V AC	50/60Hz	100/120V AC			**LSRD-6**
200/240V AC		200/240V AC			

LED Lamp Ratings

Part No.		LSRD-6	LSRD-1	LSRD-2	LSRD-H2	LSRD-M2	LSRD-M4
Ramp Base		BA9S/13					
Rated Voltage		6V AC/DC	12V AC/DC	24V AC/DC	100/120V AC/DC	200/220V AC	230/240V AC
Voltage Range		6V AC/DC ±10%	12V AC/DC ±10%	24V AC/DC ±10%	100/120V AC/DC ±10%	200/220V AC ±10%	230/240V AC ±10%
Current Draw	DC	10mA	7mA	7mA	2mA	2mA	2mA
	AC	14mA	8mA	8mA	2mA	2mA	2mA
Life (reference value)		Approx. 50,000 hours (The luminance is reduced to 50% the initial intensity when used on complete DC at 25°C.)					
Internal Circuit		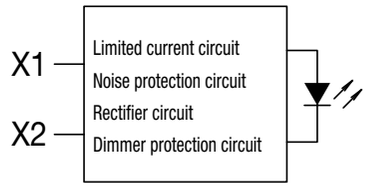					

Direct Opening of Key Selector Switch

Applicable Type	2-position	3-position
Minimum Operator Angle for Direct Opening Action	60° (90° Maintained)	45°
Minimum Operator Torque for Direct Opening Action	0.4 N·m	
Maximum Operator Angle	60° (90° Maintained)	45°

Degree of Protection

IEC60529

Unit	IEC 60529
All models except Illuminated selector switches, dual pushbuttons, pilot lights	IP65 (*1)
Illuminated selectors, pilot lights	IP65
Dual pushbuttons	IP40 (*2)

*1) When using a nameplate with the HW series, IP65 protection degree is achieved only when nameplates shown on page 50 are used.
(IP40 when other ø22 namplates such as NWA are used)
*2) IP65 when used with button covers (HW9Z-D7D).

UL50

Unit	UL50
All models except illuminated selector switches	Type 4X (*3)(*4)

*3) When using a nameplate with the HW series, IP65 protection degree is achieved only when nameplates shown on page 50 are used.
*4) For dual pushbuttons, Type 4X is acheived when used with button covers (HW9Z-D7D).

chanhvinh.com

Specifications

Switches (except for emergency stop switch)

Operating Temperature	–25 to +60°C (no freezing) Illuminated unit: –25 to +50°C
Operating Humidity	45 to 85% RH (no condensation)
Storage Temperature	–40 to +80°C (no freezing)
Contact Resistance	50 mΩ maximum (initial value)
Insulation Resistance	100 MΩ minimum (500V DC megger)
Overvoltage Category	II
Impulse Withstand Voltage	4.0kV Illuminated unit: 2.5kV
Pollution Degree	3 (IEC60947-5-1)
Dielectric Strength	Between live and dead parts: 2500V AC, 1 minute
Vibration Resistance	Damage limits: 30 Hz, amplitude 1.5 mm Operating extremes: 5 to 55Hz, amplitude 0.5 mm
Shock Resistance	Damage limits: 1,000 m/s^2
	Operating extremes: 100 m/s^2
Degree of Protection	Terminal: Finger-safe (IP20) structure Panel front: IP65 (IEC 60529), UL Type 4X
Recommended Tightening Torque for Locking Ring	2.0N·m
Terminal Style	Push-in terminal
Mechanical Life (minimum operations)	Pushbuttons, Illuminated Pushbuttons Momentary ····· 5,000,000 (*5) ····· 1,000,000 (*6) Maintained ····· 500,000 (*5) ····· 100,000 (*6) Dual pushbuttons ····· 500,000 (*5) ····· 100,000 (*6) Selector switches ····· 500,000 (*5) ····· 100,000 (*6) Key selector switches (Disc tumbler) 500,000 (*5) 100,000 (*6) Key selector switches (Pin tumbler) 100,000 (*5) 100,000 (*6) Illuminated selector switches ····· 500,000 (*5) ····· 100,000 (*6) Selector pushbuttons ····· 250,000 (*5) ····· 100,000 (*6) Monolever switches ····· 250,000 (*5) ····· 100,000 (*6)
Electrical Life (*5)	Pushbuttons, Illuminated Pushbuttons Momentary ····· 500,000 (*1)(*5) ····· 50,000 (*1)(*6) Maintained ····· 500,000 (*3)(*5) ····· 50,000 (*3)(*6) Dual pushbuttons ····· 500,000 (*1)(*5) ····· 50,000 (*1)(*6) Selector switches ····· 500,000 (*2)(*5) ····· 50,000 (*2)(*6) Key selector switches (Disc tumbler) 500,000 (*2)(*5) 50,000 (*2)(*6) Key selector switches (Pin tumbler) 100,000 (*2)(*5) 50,000 (*2)(*6) Illuminated selector switches ····· 500,000 (*2)(*5) ····· 50,000 (*2)(*6) Selector pushbuttons ····· 250,000 (*2)(*5) ····· 50,000 (*2)(*6) Monolever switches ····· 250,000 (*3)(*5) ····· 50,000 (*3)(*6)
Weight (approx.)	38g (**HW1B-M1P11**), 54g (**HW1B-M1P22**) 38g (**HW1S-2TP11**), 54g (**HW1S-2TP22**) 76g (**HW1K-2AP11**), 92g (**HW1K-2AP22N2**) 66g (**HW1K-2PCP11**), 45g (**HW1L-M1P11Q4**) 44g (**HW1F-2P11Q4**), 43g (**HW1R-2AP11**) 55g (**HW1M-1010P-20**), 45g (**HW7D-B11P1001**)

*1) Switching frequency 1,800 operations/h, duty ratio 40%
*2) Switching frequency 1,200 operations/h, duty ratio 40%
*3) Switching frequency 900 operations/h, duty ratio 40%
*4) Load condition 220V AC, 3A (AC-15)
*5) Single contact block
*6) Double contact block

Pilot lights

Operating Temperature	–25 to +50°C (no freezing)
Operating Humidity	45 to 85% RH (no condensation)
Storage Temperature	–40 to +80°C (no freezing)
Insulation Resistance	100 MΩ minimum (500V DC megger)
Overvoltage Category	II
Impulse Withstand Voltage	2.5kV
Pollution Degree	3
Dielectric Strength	Between live and dead parts: 2000V AC, 1 minute
Vibration Resistance	Damage limits: 30 Hz, amplitude 1.5 mm Operating extremes: 5 to 55Hz, amplitude 0.5 mm
Shock Resistance	Damage limits: 1,000 m/s^2
	Operating extremes: 100 m/s^2
Degree of Protection	Terminal: Finger-safe (IP20) structure Panel front: IP65 (IEC 60529), UL Type 4X
Recommended Tightening Torque for Locking Ring	2.0N·m
Terminal Style	Push-in terminal
Weight (approx.)	26g (**HW1P-2JPQ4**) 27g (**HW1P-2JPRH2**) 28g (**HW1P-2JPCM2**)

Mounting Hole Layout

(Dimensions in mm)

Panel Cut (IEC60947-5-1)

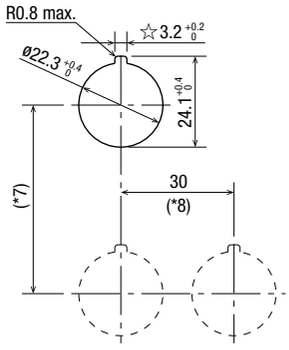

- When high temperature is expected, take necessary measures such as securing sufficient mounting centers or using a cooling fan.
- The 3.2 mm recess is for preventing rotation and is not necessary when the nameplate or anti-rotation ring is not used.

Minimum Mounting Centers

(Dimensions in mm)

Unit	Vertical (*7)	Horizontal (*8)
ø40mm mushroom buttons	50	40
Selector pushbuttons	50	50
Monolever switches	72	72
Pilot lights	50	30
Dual pushbuttons	55	30
Illuminated selector switches	50	50

- For emergency stop switch mounting centers, see page 46.
- Determine the mounting cetners in consideration of the operation, wiring, and testing terminals.

Ordering Information

- Specify the Ordering No. when ordering.
  When ordering, specify button color, lens color, key removal specification, or key number codes.
- Some combinations cannot be ordered. For details, contact IDEC.
- Nameplates and accessories for mono-lever switch are ordered separately. See page 50 to 55.

Illuminated / non-illuminated buzzer specifications: see page 45 Emergency stop switch specifications: see page 46

chanhvinh.com

Pushbuttons

Assembled



Package Quantity: 1

Name / Shape	Operation	Contact Configuration	Part No. (Ordering No.)	⑤ Color Code
Flush HW1B-M1 HW1B-A1 	Momentary	1NO	HW1B-M1P10⑤	B (black) G (green) R (red) Y (yellow) S (blue) W (white)
		1NC	HW1B-M1P01⑤	
		1NO-1NC	HW1B-M1P11⑤	
		2NO	HW1B-M1P20⑤	
		2NC	HW1B-M1P02⑤	
	Maintained	1NO	HW1B-A1P10⑤	
Extended HW1B-M2 	Momentary	1NO	HW1B-M2P10⑤	
		1NC	HW1B-M2P01⑤	
		1NO-1NC	HW1B-M2P11⑤	
		2NO	HW1B-M2P20⑤	
		2NC	HW1B-M2P02⑤	

• For other specifications, select from sub-assembled units (page 13 to 14).

Package Quantity: 1

Name / Shape	Operation	Contact Configuration	Part No. (Ordering No.)	⑤ Color Code
ø29mm Mushroom HW1B-M3 	Momentary	1NO	HW1B-M3P10⑤	B (black) G (green) R (red) Y (yellow) S (blue) W (white)
		1NC	HW1B-M3P01⑤	
ø40mm Mushroom HW1B-M4 	Momentary	1NO	HW1B-M4P10⑤	
		1NC	HW1B-M4P01⑤	

- Specify a button color code in place of ⑤ in the Part No.
- Pushbuttons with 1 contact block contain 2 dummy blocks. Pushbuttons with 2 contact blocks contain 1 dummy block.
- When requiring flush type maintained switches other than 1NO contact configuration, select from sub-assembled product.

Pushbuttons Part No. Example

Assembled and sub-assembled unit

Assembled

HW1B - M 1 P 10 B

①Bezel shape code
1: Round
2: Square

②Operation code
M: Momentary
A: Maintained

③Button style code
1: Flush
2: Extended
3: ø29mm Mushroom
4: ø40mm Mushroom
5: ø60mm Mushroom

④Contact configuration code
10: 1NO
01: 1NC
11: 1NO-1NC
20: 2NO
02: 2NC
22: 2NO-2NC

⑤Button color code
(see the table above)

Operator unit

HW1B - M 1 B - PS

①Bezel shape code
1: Round
2: Square

②Operation code
M: Momentary
A: Maintained

③Button style code
1: Flush
2: Extended
3: ø29mm Mushroom
4: ø40mm Mushroom
5: ø60mm Mushroom

⑤Button color code
(see page 13)

Contact unit

HW- CN P 10

④Contact configuration code
(see page 13)

• For available assembled products, see above table.

chanhvinh.com

Pushbuttons

Sub-Assembled

When ordering, specify the sub-assembled ordering no. See page 12 for available assembled products.

Assembled = Operator unit + Contact unit (Contact block, dummy block, connecting unit)






Name / Shape	Operation	Contact Configuration	<Reference> Assembled Part No.	⑤ Button Color Code
Flush 	Momentary	1NO	HW1B-M1P10⑤	B (black) G (green) R (red) Y (yellow) S (blue) W (white)
		1NC	HW1B-M1P01⑤	
		1NO-1NC	HW1B-M1P11⑤	
		2NO	HW1B-M1P20⑤	
		2NC	HW1B-M1P02⑤	
		2NO-2NC	HW1B-M1P22⑤	
	Maintained	1NO	HW1B-A1P10⑤	
		1NC	HW1B-A1P01⑤	
		1NO-1NC	HW1B-A1P11⑤	
		2NO	HW1B-A1P20⑤	
		2NC	HW1B-A1P02⑤	
		2NO-2NC	HW1B-A1P22⑤	
Flush 	Momentary	1NO	HW1B-M2P10⑤	B (black) G (green) R (red) Y (yellow) S (blue) W (white)
		1NC	HW1B-M2P01⑤	
		1NO-1NC	HW1B-M2P11⑤	
		2NO	HW1B-M2P20⑤	
		2NC	HW1B-M2P02⑤	
		2NO-2NC	HW1B-M2P22⑤	
	Maintained	1NO	HW1B-A2P10⑤	
		1NC	HW1B-A2P01⑤	
		1NO-1NC	HW1B-A2P11⑤	
		2NO	HW1B-A2P20⑤	
		2NC	HW1B-A2P02⑤	
		2NO-2NC	HW1B-A2P22⑤	
ø29mm Mushroom 	Momentary	1NO	HW1B-M3P10⑤	B (black) G (green) R (red) Y (yellow) S (blue) W (white)
		1NC	HW1B-M3P01⑤	
		1NO-1NC	HW1B-M3P11⑤	
		2NO	HW1B-M3P20⑤	
		2NC	HW1B-M3P02⑤	
		2NO-2NC	HW1B-M3P22⑤	
	Maintained	1NO	HW1B-A3P10⑤	
		1NC	HW1B-A3P01⑤	
		1NO-1NC	HW1B-A3P11⑤	
		2NO	HW1B-A3P20⑤	
		2NC	HW1B-A3P02⑤	
		2NO-2NC	HW1B-A3P22⑤	

Sub-Assembled Ordering No.

Package Quantity: 1

Operator Unit		Contact Unit		
Name / Shape	Part No. (Ordering No.)	Shape	Contact Configuration	Part No. (Ordering No.)
Flush 	HW1B-M1⑤-PS		1NO	HW-CNP10
			1NC	HW-CNP01
			1NO-1NC	HW-CNP11
	HW1B-A1⑤-PS		2NO	HW-CNP20
			2NC	HW-CNP02
			2NO-2NC	HW-CNP22
Extended 	HW1B-M2⑤-PS		1NO	HW-CNP10
			1NC	HW-CNP01
			1NO-1NC	HW-CNP11
	HW1B-A2⑤-PS		2NO	HW-CNP20
			2NC	HW-CNP02
			2NO-2NC	HW-CNP22
ø29mm Mushroom 	HW1B-M3⑤-PS		1NO	HW-CNP10
			1NC	HW-CNP01
			1NO-1NC	HW-CNP11
	HW1B-A3⑤-PS		2NO	HW-CNP20
			2NC	HW-CNP02
			2NO-2NC	HW-CNP22

- Specify a button color code in place of ⑤ in the Part No.
  B (black), G (green), R (red), Y (yellow), S (blue), W (white)

For Part No. (Ordering No.)/ mounting positions of contact units, see page 51.

Pushbuttons

Sub-Assembled

When ordering, specify the sub-assembled ordering no. See page 12 for available assembled products.

Name / Shape	Operation	Contact Configuration	<Reference> Assembled Part No.	⑤ Button Color Code
ø40mm Mushroom 	Momentary	1NO	HW1B-M4P10⑤	B (black) G (green) R (red) Y (yellow) S (blue) W (white)
		1NC	HW1B-M4P01⑤	
		1NO-1NC	HW1B-M4P11⑤	
		2NO	HW1B-M4P20⑤	
		2NC	HW1B-M4P02⑤	
		2NO-2NC	HW1B-M4P22⑤	
	Maintained	1NO	HW1B-A4P10⑤	
		1NC	HW1B-A4P01⑤	
		1NO-1NC	HW1B-A4P11⑤	
		2NO	HW1B-A4P20⑤	
		2NC	HW1B-A4P02⑤	
		2NO-2NC	HW1B-A4P22⑤	
ø60mm Mushroom 	Momentary	1NO	HW1B-M5P10⑤	B (black) G (green) R (red)
		1NC	HW1B-M5P01⑤	
		1NO-1NC	HW1B-M5P11⑤	
		2NO	HW1B-M5P20⑤	
		2NC	HW1B-M5P02⑤	
		2NO-2NC	HW1B-M5P22⑤	
Square Flush 	Momentary	1NO	HW2B-M1P10⑤	B (black) G (green) R (red) Y (yellow) S (blue) W (white)
		1NC	HW2B-M1P01⑤	
		1NO-1NC	HW2B-M1P11⑤	
		2NO	HW2B-M1P20⑤	
		2NC	HW2B-M1P02⑤	
		2NO-2NC	HW2B-M1P22⑤	
	Maintained	1NO	HW2B-A1P10⑤	
		1NC	HW2B-A1P01⑤	
		1NO-1NC	HW2B-A1P11⑤	
		2NO	HW2B-A1P20⑤	
		2NC	HW2B-A1P02⑤	
		2NO-2NC	HW2B-A1P22⑤	
Square Extended 	Momentary	1NO	HW2B-M2P10⑤	B (black) G (green) R (red) Y (yellow) S (blue) W (white)
		1NC	HW2B-M2P01⑤	
		1NO-1NC	HW2B-M2P11⑤	
		2NO	HW2B-M2P20⑤	
		2NC	HW2B-M2P02⑤	
		2NO-2NC	HW2B-M2P22⑤	
	Maintained	1NO	HW2B-A2P10⑤	
		1NC	HW2B-A2P01⑤	
		1NO-1NC	HW2B-A2P11⑤	
		2NO	HW2B-A2P20⑤	
		2NC	HW2B-A2P02⑤	
		2NO-2NC	HW2B-A2P22⑤	

Sub-Assembled Ordering No.

Package Quantity: 1

Operator Unit		Contact Unit		
Name / Shape	Part No. (Ordering No.)	Shape	Contact Configuration	Part No. (Ordering No.)
ø40mm Mushroom 	HW1B-M4⑤-PS		1NO	HW-CNP10
			1NC	HW-CNP01
			1NO-1NC	HW-CNP11
	HW1B-A4⑤-PS		2NO	HW-CNP20
			2NC	HW-CNP02
			2NO-2NC	HW-CNP22
ø60mm Mushroom 	HW1B-M5⑤-PS (*1)		1NO	HW-CNP10
			1NC	HW-CNP01
			1NO-1NC	HW-CNP11
			2NO	HW-CNP20
			2NC	HW-CNP02
			2NO-2NC	HW-CNP22
Square Flush 	HW2B-M1⑤-PS		1NO	HW-CNP10
			1NC	HW-CNP01
			1NO-1NC	HW-CNP11
	HW2B-A1⑤-PS		2NO	HW-CNP20
			2NC	HW-CNP02
			2NO-2NC	HW-CNP22
Square Extended 	HW2B-M2⑤-PS		1NO	HW-CNP10
			1NC	HW-CNP01
			1NO-1NC	HW-CNP11
	HW2B-A2⑤-PS		2NO	HW-CNP20
			2NC	HW-CNP02
			2NO-2NC	HW-CNP22

- Specify a button color code in place of ⑤ in the Part No.
  B (black), G (green), R (red), Y (yellow), S (blue), W (white)

*1) Only B (black), G (green), R (red) available for ø60mm mushroom.

For Part No. (Ordering No.)/ mounting positions of contact units, see page 51.

Pushbuttons Dimensions

All dimensions in mm.

Flush

1 to 2 contacts

HW1B-☐1P

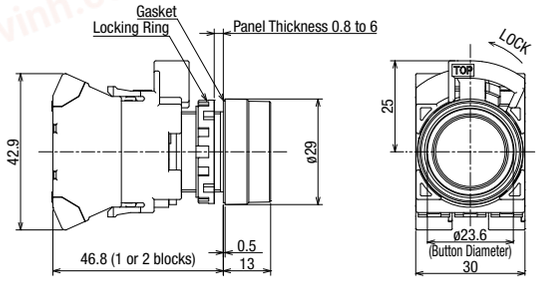

3 to 4 contacts

HW1B-☐1P

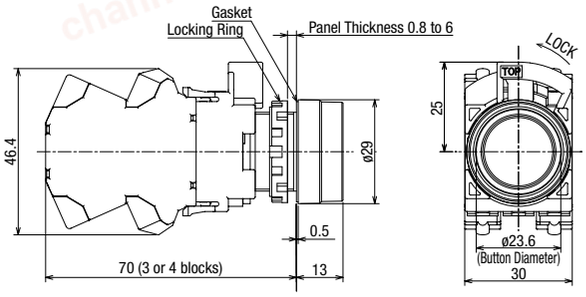

Extended

1 to 2 contacts

HW1B-☐2P

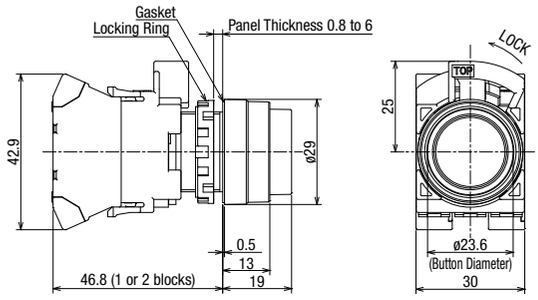

3 to 4 contacts

HW1B-☐2P

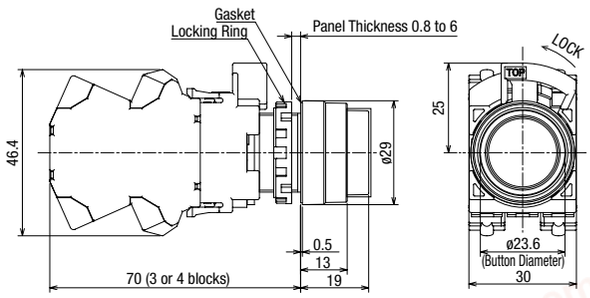

ø29mm Mushroom

1 to 2 contacts

HW1B-☐3P

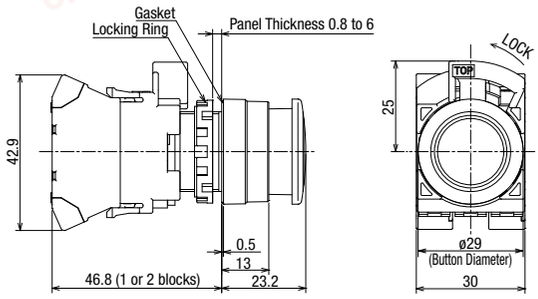

3 to 4 contacts

HW1B-☐3P

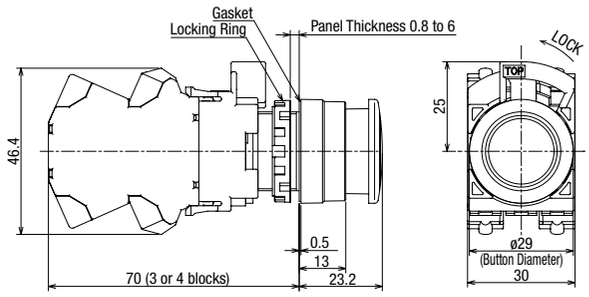

ø40mm Mushroom

1 to 2 contacts

HW1B-☐4P

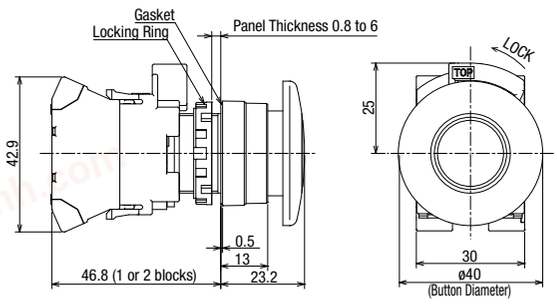

3 to 4 contacts

HW1B-☐4P

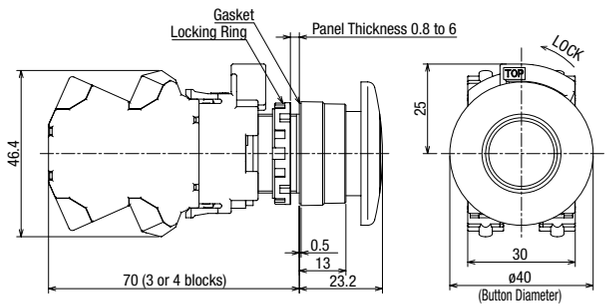

Pushbuttons Dimensions

All dimensions in mm.

ø60mm Mushroom

1 to 2 contacts

HW1B-M5P

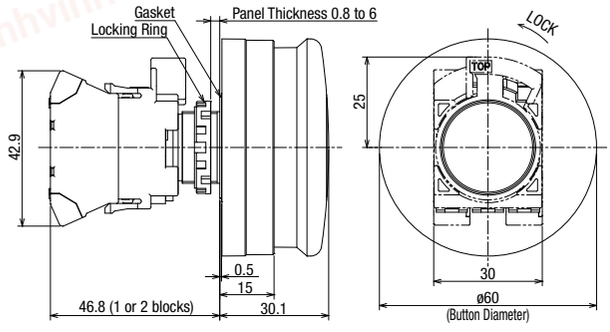

3 to 4 contacts

HW1B-M5P

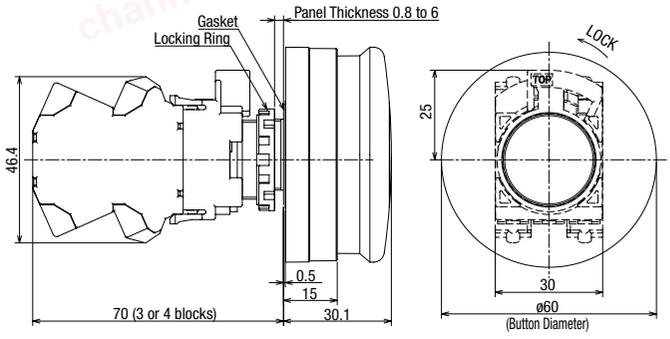

Square Flush

1 to 2 contacts

HW2B-☐1P

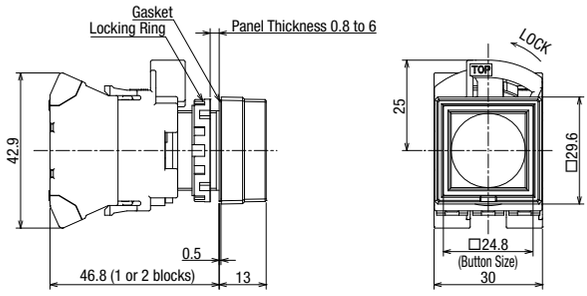

3 to 4 contacts

HW2B-☐1P

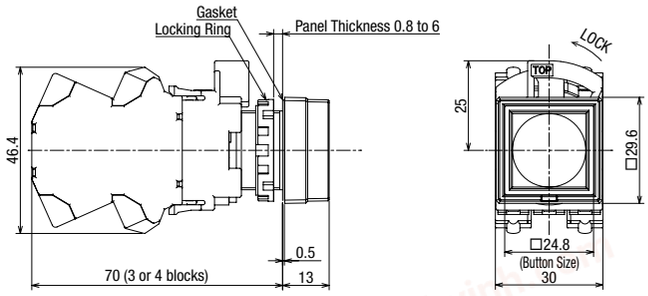

Square Extended

1 to 2 contacts

HW2B-☐2P

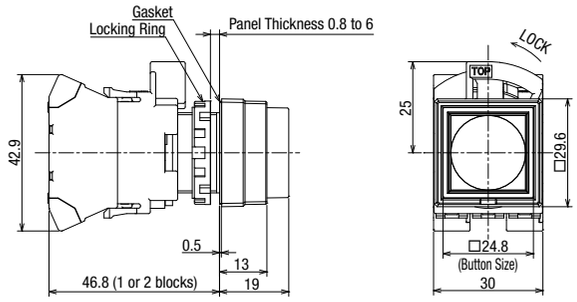

3 to 4 contacts

HW2B-☐2P

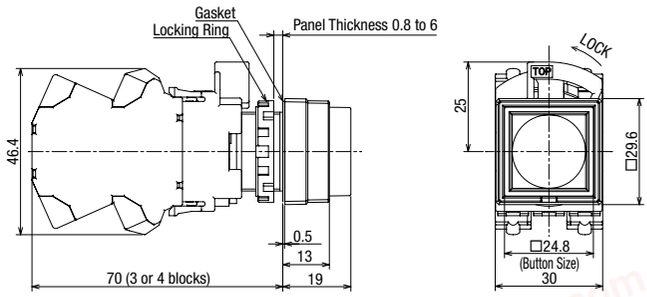

Illuminated Pushbuttons

Assembled



Package Quantity: 1

Name / Shape	Operation	Rated Voltage	Contact Configuration	Part No. (Ordering No.)	⑥ Illumination Color Code
Round Flush (marking) HW1L-M1 HW1L-A1 	Momentary	12V AC/DC	1NO	HW1L-M1P10Q3⑥	**R** (red) **G** (green) **Y** (yellow) **A** (amber) **S** (blue) **PW** (pure white)
		24V AC/DC	1NO	HW1L-M1P10Q4⑥	
			1NC	HW1L-M1P01Q4⑥	
			1NO-1NC	HW1L-M1P11Q4⑥	
			2NO	HW1L-M1P20Q4⑥	
		100/120V AC/DC	1NO	HW1L-M1P10QH2⑥	
		200/220V AC	1NO	HW1L-M1P10QM⑥	
	Maintained	24V AC/DC	1NO	HW1L-A1P10Q4⑥	
			1NC	HW1L-A1P01Q4⑥	
			1NO-1NC	HW1L-A1P11Q4⑥	
			2NO	HW1L-A1P20Q4⑥	
Round Extended (marking) HW1L-M2 	Momentary	24V AC/DC	1NO	HW1L-M2P10Q4⑥	**R** (red) **G** (green) **Y** (yellow) **A** (amber) **S** (blue) **PW** (pure white)
			1NO-1NC	HW1L-M2P11Q4⑥	
			2NO	HW1L-M2P20Q4⑥	
Round Extended with Full Shroud (marking) HW1L-MF2 	Momentary	24V AC/DC	1NO	HW1L-MF2P10Q4⑥	**R** (red) **G** (green) **Y** (yellow) **A** (amber) **S** (blue) **PW** (pure white)
			1NO-1NC	HW1L-MF2P11Q4⑥	
			2NO	HW1L-MF2P20Q4⑥	
Square Flush (marking) HW2L-M1 	Momentary	24V AC/DC	1NO	HW2L-M1P10Q4⑥	**R** (red) **G** (green) **Y** (yellow) **A** (amber) **S** (blue) **PW** (pure white)
			1NC	HW2L-M1P01Q4⑥	
			1NO-1NC	HW2L-M1P11Q4⑥	
			2NO	HW2L-M1P20Q4⑥	

• Specify an illumination color code in place of ⑥ in the Part No.

• For other specifications, select from sub-assembled units (page 18 to 19).

chanhvinh.com

Illuminated Pushbuttons

Sub-Assembled When ordering, specify the sub-assembled ordering no. See page 17 for available assembled products.

Assembled = Operator unit + LED lamp + Contact unit (illuminated) (Contact block, LED module, connecting unit)







Name / Shape	Operation	Contact Configuration	<Reference> Assembled Part No.	⑥ Illumination Color Code
Round Flush (marking) 	Momentary	1NO	HW1L-M1P10⑤⑥	R (red) G (green) Y (yellow) A (amber) S (blue) PW (pure white)
		1NC	HW1L-M1P01⑤⑥	
		1NO-1NC	HW1L-M1P11⑤⑥	
		2NO	HW1L-M1P20⑤⑥	
		2NC	HW1L-M1P02⑤⑥	
		2NO-2NC	HW1L-M1P22⑤⑥	
	Maintained	1NO	HW1L-A1P10⑤⑥	
		1NC	HW1L-A1P01⑤⑥	
		1NO-1NC	HW1L-A1P11⑤⑥	
		2NO	HW1L-A1P20⑤⑥	
		2NC	HW1L-A1P02⑤⑥	
		2NO-2NC	HW1L-A1P22⑤⑥	
Round Extended (marking) 	Momentary	1NO	HW1L-M2P10⑤⑥	R (red) G (green) Y (yellow) A (amber) S (blue) PW (pure white)
		1NC	HW1L-M2P01⑤⑥	
		1NO-1NC	HW1L-M2P11⑤⑥	
		2NO	HW1L-M2P20⑤⑥	
		2NC	HW1L-M2P02⑤⑥	
		2NO-2NC	HW1L-M2P22⑤⑥	
	Maintained	1NO	HW1L-A2P10⑤⑥	
		1NC	HW1L-A2P01⑤⑥	
		1NO-1NC	HW1L-A2P11⑤⑥	
		2NO	HW1L-A2P20⑤⑥	
		2NC	HW1L-A2P02⑤⑥	
		2NO-2NC	HW1L-A2P22⑤⑥	
Round Extended with Full Shroud (marking) 	Momentary	1NO	HW1L-MF2P10⑤⑥	R (red) G (green) Y (yellow) A (amber) S (blue) PW (pure white)
		1NC	HW1L-MF2P01⑤⑥	
		1NO-1NC	HW1L-MF2P11⑤⑥	
		2NO	HW1L-MF2P20⑤⑥	
		2NC	HW1L-MF2P02⑤⑥	
		2NO-2NC	HW1L-MF2P22⑤⑥	
	Maintained	1NO	HW1L-AF2P10⑤⑥	
		1NC	HW1L-AF2P01⑤⑥	
		1NO-1NC	HW1L-AF2P11⑤⑥	
		2NO	HW1L-AF2P20⑤⑥	
		2NC	HW1L-AF2P02⑤⑥	
		2NO-2NC	HW1L-AF2P22⑤⑥	

- Specify a rated voltage code in place of ⑤ in the Part No.

Code	Rated voltage	Code	Rated voltage
Q2	6V AC/DC	QH2	100/120V AC/DC
Q3	12V AC/DC	QM	200/220V AC
Q4	24V AC/DC	QM4	230/240V AC

- Specify an illumination color code in place of ⑥ in the Part No.
  R (red), G (green), Y (yellow), A (amber), S (blue), PW (pure white)

Sub-Assembled Ordering No.

Operator unit	
Name / Shape	Part No. (Ordering No.)
Round Flush (marking) 	HW1L-M1⑥-PS
	HW1L-A1⑥-PS
Round Extended (marking) 	HW1L-M2⑥-PS
	HW1L-A2⑥-PS
Round Extended with Full Shroud (marking) 	HW1L-MF2⑥-PS
	HW1L-AF2⑥-PS

Package Quantity: 1

Contact Unit		
Shape	Contact Configuration	Part No. (Ordering No.)
	1NO	HW-CNP10Q0
	1NC	HW-CNP01Q0
	1NO-1NC	HW-CNP11Q0
	2NO	HW-CNP20Q0
	2NC	HW-CNP02Q0
	2NO-2NC	HW-CNP22Q0
	1NO	HW-CNP10Q0
	1NC	HW-CNP01Q0
	1NO-1NC	HW-CNP11Q0
	2NO	HW-CNP20Q0
	2NC	HW-CNP02Q0
	2NO-2NC	HW-CNP22Q0
	1NO	HW-CNP10Q0
	1NC	HW-CNP01Q0
	1NO-1NC	HW-CNP11Q0
	2NO	HW-CNP20Q0
	2NC	HW-CNP02Q0
	2NO-2NC	HW-CNP22Q0

Note) LED lamp is not supplied. When ordering contact units (illuminated) selected LED from below table.

LED lamp (package quantity:1) 	
Rated Voltage	Part No. (Ordering No.)
6V AC/DC	LSRD-6
12V AC/DC	LSRD-1
24V AC/DC	LSRD-2
100/120V AC/DC	LSRD-H2
200/220V AC	LSRD-M2
230/240V AC	LSRD-M4

For Part No. (Ordering No.)/ mounting positions of contact units, see page 52.

Illuminated Pushbuttons

Name / Shape	Operation	Contact Configuration	<Reference> Assembled Part No.	⑥ Color Code
Square Flush (marking) 	Momentary	1NO	HW2L-M1P10⑤⑥	R (red) G (green) Y (yellow) A (amber) S (blue) PW (pure white)
		1NC	HW2L-M1P01⑤⑥	
		1NO-1NC	HW2L-M1P11⑤⑥	
		2NO	HW2L-M1P20⑤⑥	
		2NC	HW2L-M1P02⑤⑥	
		2NO-2NC	HW2L-M1P22⑤⑥	
	Maintained	1NO	HW2L-A1P10⑤⑥	
		1NC	HW2L-A1P01⑤⑥	
		1NO-1NC	HW2L-A1P11⑤⑥	
		2NO	HW2L-A1P20⑤⑥	
		2NC	HW2L-A1P02⑤⑥	
		2NO-2NC	HW2L-A1P22⑤⑥	
ø29 Mushroom (marking) 	Momentary	1NO	HW1L-M3P10⑤⑥	R (red) G (green) Y (yellow) A (amber) S (blue) PW (pure white)
		1NC	HW1L-M3P01⑤⑥	
		1NO-1NC	HW1L-M3P11⑤⑥	
		2NO	HW1L-M3P20⑤⑥	
		2NC	HW1L-M3P02⑤⑥	
		2NO-2NC	HW1L-M3P22⑤⑥	
	Maintained	1NO	HW1L-A3P10⑤⑥	
		1NC	HW1L-A3P01⑤⑥	
		1NO-1NC	HW1L-A3P11⑤⑥	
		2NO	HW1L-A3P20⑤⑥	
		2NC	HW1L-A3P02⑤⑥	
		2NO-2NC	HW1L-A3P22⑤⑥	
ø40 Jumbo Mushroom (marking) 	Momentary	1NO	HW1L-M4P10⑤⑥	R (red) G (green) Y (yellow) A (amber) S (blue) PW (pure white)
		1NC	HW1L-M4P01⑤⑥	
		1NO-1NC	HW1L-M4P11⑤⑥	
		2NO	HW1L-M4P20⑤⑥	
		2NC	HW1L-M4P02⑤⑥	
		2NO-2NC	HW1L-M4P22⑤⑥	
	Maintained	1NO	HW1L-A4P10⑤⑥	
		1NC	HW1L-A4P01⑤⑥	
		1NO-1NC	HW1L-A4P11⑤⑥	
		2NO	HW1L-A4P20⑤⑥	
		2NC	HW1L-A4P02⑤⑥	
		2NO-2NC	HW1L-A4P22⑤⑥	

• Specify a rated voltage code in place of ⑤ in the Part No.

Code	Rated voltage	Code	Rated voltage
Q2	6V AC/DC	QH2	100/120V AC/DC
Q3	12V AC/DC	QM	200/220V AC
Q4	24V AC/DC	QM4	230/240V AC

• Specify an illumination color code in place of ⑥ in the Part No.
R (red), G (green), Y (yellow), A (amber), S (blue), PW (pure white)

Sub-Assembled Ordering No.

Package Quantity: 1

Operator unit		Contact Unit		
Name / Shape	Part No. (Ordering No.)	Shape	Contact Configuration	Part No. (Ordering No.)
Square Flush (marking) 	HW2L-M1⑥-PS		1NO	HW-CNP10Q0
			1NC	HW-CNP01Q0
			1NO-1NC	HW-CNP11Q0
	HW2L-A1⑥-PS		2NO	HW-CNP20Q0
			2NC	HW-CNP02Q0
			2NO-2NC	HW-CNP22Q0
ø29 Mushroom (marking) 	HW1L-M3⑥-PS		1NO	HW-CNP10Q0
			1NC	HW-CNP01Q0
			1NO-1NC	HW-CNP11Q0
	HW1L-A3⑥-PS		2NO	HW-CNP20Q0
			2NC	HW-CNP02Q0
			2NO-2NC	HW-CNP22Q0
ø40 Jumbo Mushroom (marking) 	HW1L-M4⑥-PS		1NO	HW-CNP10Q0
			1NC	HW-CNP01Q0
			1NO-1NC	HW-CNP11Q0
	HW1L-A4⑥-PS		2NO	HW-CNP20Q0
			2NC	HW-CNP02Q0
			2NO-2NC	HW-CNP22Q0

Note) LED lamp is not supplied. When ordering contact units (illuminated) selected LED from below table.

LED lamp (package quantity:1) 	
Rated Voltage	Part No. (Ordering No.)
6V AC/DC	LSRD-6
12V AC/DC	LSRD-1
24V AC/DC	LSRD-2
100/120V AC/DC	LSRD-H2
200/220V AC	LSRD-M2
230/240V AC	LSRD-M4

For Part No. (Ordering No.)/ mounting positions of contact units, see page 52.

chanhvinh.com

Illuminated Pushbuttons Dimensions

All dimensions in mm.

Round Flush

1 to 2 contacts

HW1L-☐1P

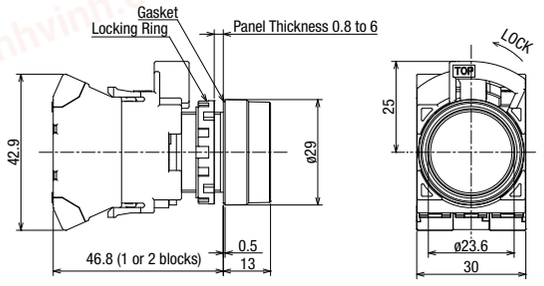

3 to 4 contacts

HW1L-☐1P

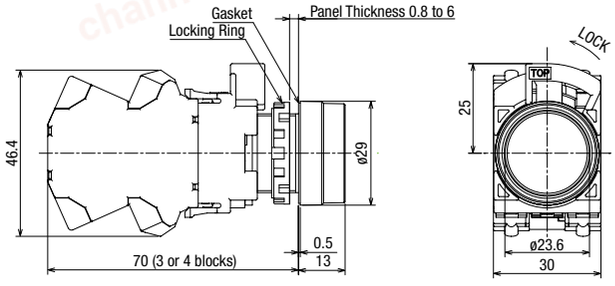

Round Extended

1 to 2 contacts

HW1L-☐2P

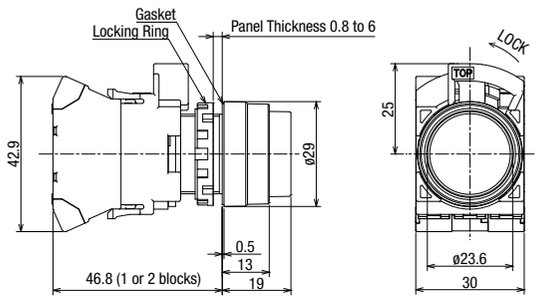

3 to 4 contacts

HW1L-☐2P

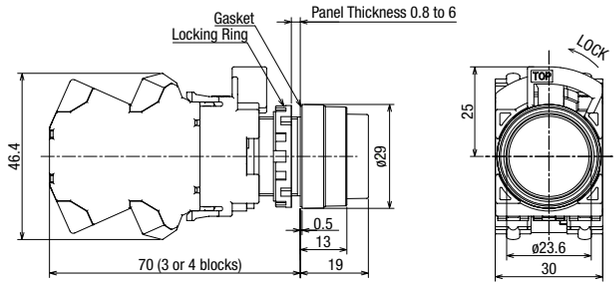

Round Extended with Full Shroud

1 to 2 contacts

HW1L-☐F2P

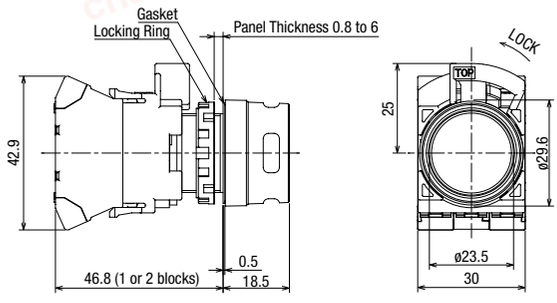

3 to 4 contacts

HW1L-☐F2P

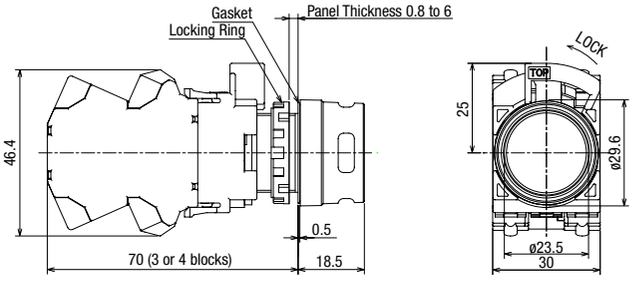

Square Flush

1 to 2 contacts

HW2L-☐1P

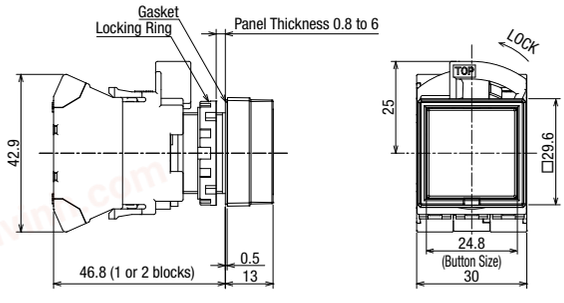

3 to 4 contacts

HW2L-☐1P

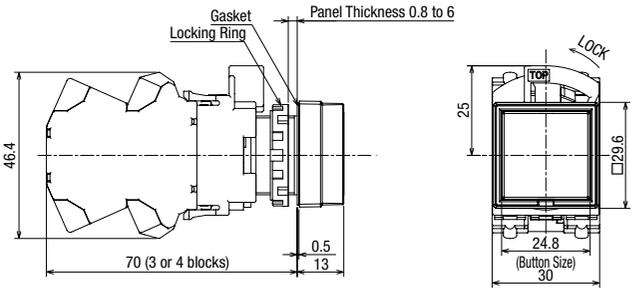

Illuminated Pushbuttons Dimensions

All dimensions in mm.

ø29 Mushroom

1 to 2 contacts

HW1L-☐3P

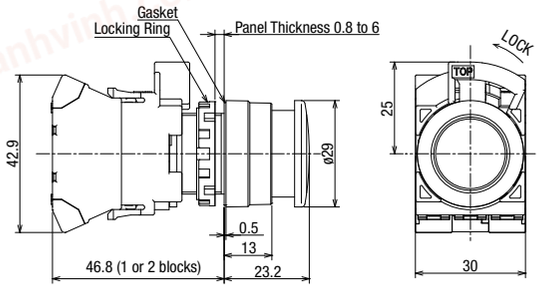

3 to 4 contacts

HW1L-☐3P

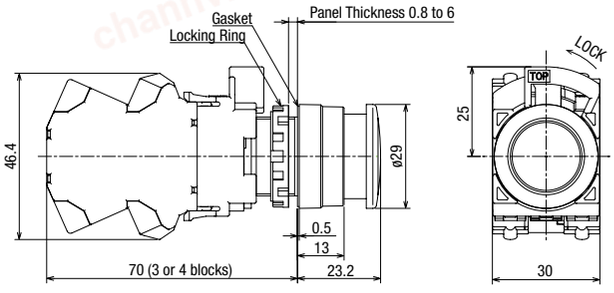

ø40 Jumbo Mushroom

1 to 2 contacts

HW1L-☐4P

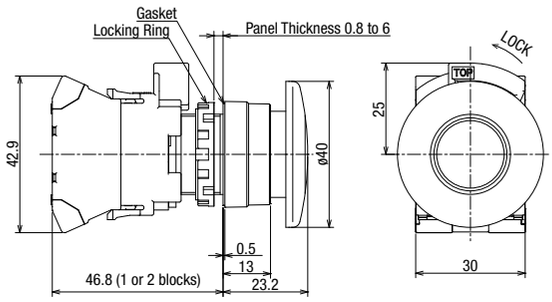

3 to 4 contacts

HW1L-☐4P

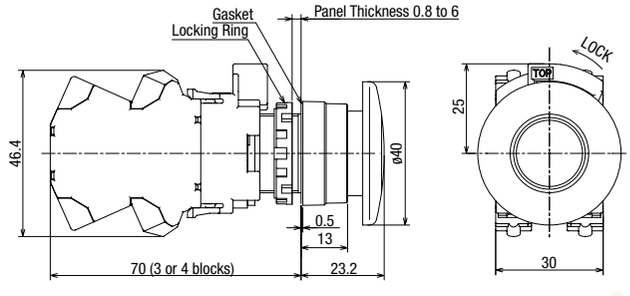

Illuminated Pushbuttons Part No. Example

Assembled and sub-assembled unit

Assembled

HW1L - M 1 P 11 Q4 R

①Bezel shape code
- **1**: Round
- **2**: Square
- **3**: Round Bezel

②Operation code
- **M**: Momentary
- **A**: Maintained

③Button style code
- **1**: Flush
- **2**: Extended
- **F2**: Round Extended with full Shroud
- **3**: ø29mm Mushroom
- **4**: ø40mm Mushroom

④Contact configuration code
- **10**: 1NO
- **01**: 1NC
- **11**: 1NO1NC
- **20**: 2NO
- **02**: 2NC
- **22**: 2NO-2NC

⑤Rated voltage code
- **Q2** : 6V AC/DC
- **Q3** : 12V AC/DC
- **Q4** : 24V AC/DC
- **QH2** : 100/120V AC/DC
- **QM** : 200/220V AC
- **QM4** : 230/240V AC

⑥Button color code (see page 17)

• For available assembled products, see table on page 17.

Operator unit

HW1L - M 1 R - PS

①Bezel shape code
- **1**: Round
- **2**: Square
- **3**: Round Bezel

②Operation code
- **M**: Momentary
- **A**: Maintained

③Button style code
- **1**: Flush
- **2**: Extended
- **F2**: Round Extended with full Shroud
- **3**: ø29mm Mushroom
- **4**: ø40mm Mushroom

⑥Button color code (see page 18)

Contact unit (illuminated)

HW - CN P 10 Q0

④Contact configuration code (see page 18)

• LED lamps are not supplied.

LED lamp

LSRD - 6

⑤Rated voltage code
- **6** : 6V AC/DC
- **1** : 12V AC/DC
- **2** : 24V AC/DC
- **H2** : 100/120V AC/DC
- **M2** : 200/220V AC
- **M4** : 230/240V AC

chanhvinh.com

Dual Pushbuttons without Pilot Light

Sub-Assembled

Dual pushbuttons can be purchased only as a sub-assembled product.

Assembled (Flush–Flush, Flush–Extended) = Operator unit + Contact unit (Contact block, dummy block, connecting unit)



Without Pilot Light

Sub-Assembled Ordering No.

Package Quantity: 1

<Reference>					Operator Unit	Contact Unit		
Operation	Button style	Contact Configuration		<Reference> Assembled Part No	Part No. (Ordering No.)	Contact Configuration		Part No. (Ordering No.)
		Top Button	Bottom Button			Top Button	Bottom Button	
Momentary	Flush–Flush	1NO	1NC	HW7D-B11P1001⑥⑦	HW7D-B11⑥⑦-PS	1NO	1NC	HW-CNP11
		1NO	1NO	HW7D-B11P1010⑥⑦		1NO	1NO	HW-CNP20
		1NO-1NC	1NO-1NC	HW7D-B11P1111⑥⑦		1NO-1NC	1NO-1NC	HW-CNP22
		2NO	2NC	HW7D-B11P2002⑥⑦		2NO	2NC	HW-CNP22N1
	Flush–Extended	1NO	1NC	HW7D-B12P1001⑥⑦	HW7D-B12⑥⑦-PS			
		1NO	1NO	HW7D-B12P1010⑥⑦				
		1NO-1NC	1NO-1NC	HW7D-B12P1111⑥⑦				
		2NO	2NC	HW7D-B12P2002⑥⑦				
Interlocking (*1)	Flush–Flush	1NO	1NC	HW7D-B21P1001⑥⑦	HW7D-B21⑥⑦-PS	1NO	1NC	HW-CNP11
		1NO	1NO	HW7D-B21P1010⑥⑦		1NO	1NO	HW-CNP20
		1NO-1NC	1NO-1NC	HW7D-B21P1111⑥⑦		1NO-1NC	1NO-1NC	HW-CNP22
		2NO	2NC	HW7D-B21P2002⑥⑦		2NO	2NC	HW-CNP22N1
	Flush–Extended	1NO	1NC	HW7D-B22P1001⑥⑦	HW7D-B22⑥⑦-PS			
		1NO	1NO	HW7D-B22P1010⑥⑦				
		1NO-1NC	1NO-1NC	HW7D-B22P1111⑥⑦				
		2NO	2NC	HW7D-B22P2002⑥⑦				

*1) Interlock: Momentary operation. When one of the buttons is pressed, the other button cannot be operated. Do not operate top and bottom buttons at the same time. Operating the buttons at the same time may lead to malfunctions.

- For contact mounting position, see page 51.
- Specify a code in place of ⑥⑦ in the Part No. See tables below

⑥Button Color Code

Code	
GR	Top Button Green Bottom Button Red
WB	Top Button White Bottom Button Black

⑦Button Legends Code

Code	
Blank	Blank
1	Top Button: I & ON / Bottom Button: O & OFF

Contact Configuration

Contact Configuration			Contact Block			Top Button		Bottom Button	
Top Button	Bottom Button	Code	Mounting Position	Contact		Nomal	Push	Nomal	Push
1NO	1NC	1001	(1)	NO			●		
			(3)	NC				●	
1NO	1NO	1010	(1)	NO			●		
			(3)	NO					●
1NO-1NC	1NO-1NC	1111	(1)	NONC	NO		●		
					NC	●			
			(3)	NONC	NO				●
					NC			●	
2NO	2NC	2002	(1)	2NO	NO		●		
					NO		●		
			(3)	2NC	NC			●	
					NC			●	

Button Position

Pushbutton Operation

Contact block (1) is actuated by the top button.
Contact block (3) is actuated by the bottom button.

Contact Block Mounting Position

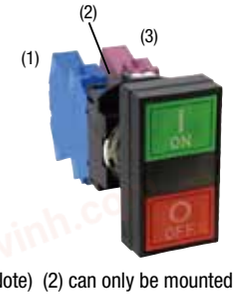

Note) (2) can only be mounted with a dummy block.

For Part No. (Ordering No.)/ mounting positions of contact units, see page 51.

chanhvinh.com

Dual Pushbuttons with Pilot Light

Sub-Assembled

Dual pushbuttons can be purchased only as a sub-assembled product.

Assembled (Flush–Flush, Flush–Extended) = Operator unit + LED Lamp + Contact unit (illuminated) (Contact block, LED module, connecting unit)



Without Pilot Light

Sub-Assembled Ordering No.

Package Quantity: 1

<Reference>					Operator Unit	Contact Unit		
Operation	Button Style	Contact Configuration		<Reference> Assembled Part No	Part No. (Ordering No.)	Contact Configuration		Part No. (Ordering No.)
		Top Button	Bottom Button			Top Button	Bottom Button	
Momentary	Flush–Flush	1NO	1NC	HW7D-L11P1001PW⑥⑦	HW7D-L11PW⑥⑦-PS	1NO	1NC	HW-CNP11Q0
		1NO	1NO	HW7D-L11P1010PW⑥⑦		1NO	1NO	HW-CNP20Q0
		1NO-1NC	1NO-1NC	HW7D-L11P1111PW⑥⑦		1NO-1NC	1NO-1NC	HW-CNP22Q0
		2NO	2NC	HW7D-L11P2002PW⑥⑦		2NO	2NC	HW-CNP22N1Q0
	Flush–Extended	1NO	1NC	HW7D-L12P1001PW⑥⑦	HW7D-L12PW⑥⑦-PS			
		1NO	1NO	HW7D-L12P1010PW⑥⑦				
		1NO-1NC	1NO-1NC	HW7D-L12P1111PW⑥⑦				
		2NO	2NC	HW7D-L12P1010PW⑥⑦				
Interlocking (*1)	Flush–Flush	1NO	1NC	HW7D-L21P1001PW⑥⑦	HW7D-L21PW⑥⑦-PS	1NO	1NC	HW-CNP11Q0
		1NO	1NO	HW7D-L21P1010PW⑥⑦		1NO	1NO	HW-CNP20Q0
		1NO-1NC	1NO-1NC	HW7D-L21P1111PW⑥⑦		1NO-1NC	1NO-1NC	HW-CNP22Q0
		2NO	2NC	HW7D-L21P2002PW⑥⑦		2NO	2NC	HW-CNP22N1Q0
	Flush–Extended	1NO	1NC	HW7D-L22P1001PW⑥⑦	HW7D-L22PW⑥⑦-PS			
		1NO	1NO	HW7D-L22P1010PW⑥⑦				
		1NO-1NC	1NO-1NC	HW7D-L22P1111PW⑥⑦				
		2NO	2NC	HW7D-L22P2002PW⑥⑦				

*1) Interlock: Momentary operation. When one of the buttons is pressed, the other button cannot be operated.

- Do not operate top and bottom buttons at the same time. Operating the buttons at the same time may lead to malfunctions.
- For contact mounting position, see page 52.
- Specify a code in place of ⑥⑦ in the Part No. See tables below

Note) LED lamp is not supplied. When ordering contact units (illuminated) selected LED from below table.

Code	Rated Voltage	Code	Rated Voltage
Q2	6V AC/DC	QH2	100/120V AC/DC
Q3	12V AC/DC	QM	200/220V AC
Q4	24V AC/DC	QM4	230/240V AC

LED lamp (Package Quantity: 1)	
	
Rated Voltage	Part No. (Ordering No.)
6V AC/DC	LSRD-6
12V AC/DC	LSRD-1
24V AC/DC	LSRD-2
100/120V AC/DC	LSRD-H2
200/220V AC	LSRD-M2
230/240V AC	LSRD-M4

⑥Button Color Code

Code	
GR	Top Button Green Bottom Button Red
WB	Top Button White Bottom Button Black

⑦Button Legends Code

Code	
Blank	Blank
1	Top Button: I & ON / Bottom Button: O & OFF

Contact Block Mounting Position

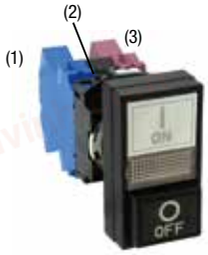

Note) (2) can only be mounted with a full voltage adapter.

For Part No. (Ordering No.)/ mounting positions of contact units, see page 52.

Dual Pushbuttons Dimensions

All dimensions in mm.

Without Pilot Light

Flush–Flush

1 to 2 contacts

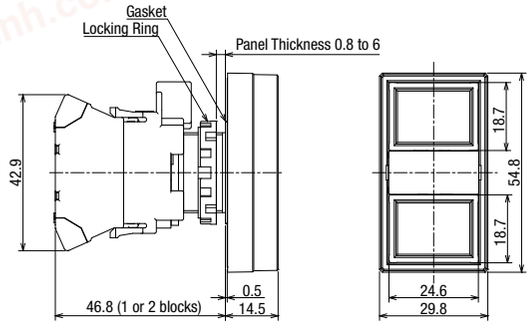

3 to 4 contacts

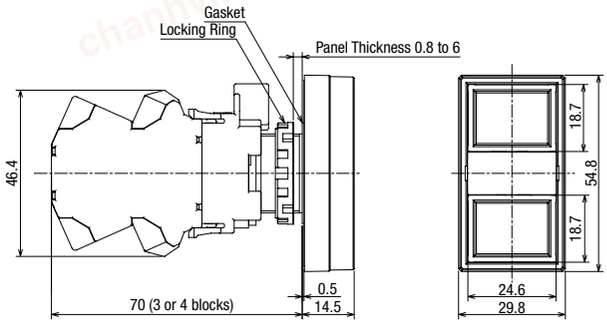

Flush–Extended

1 to 2 contacts

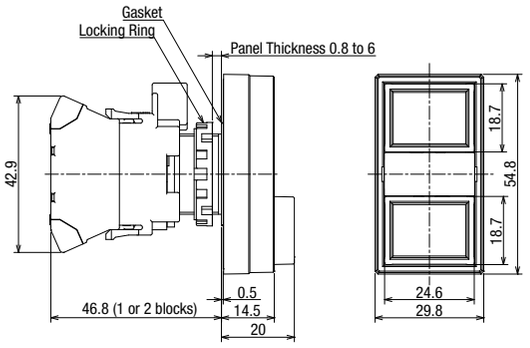

3 to 4 contacts

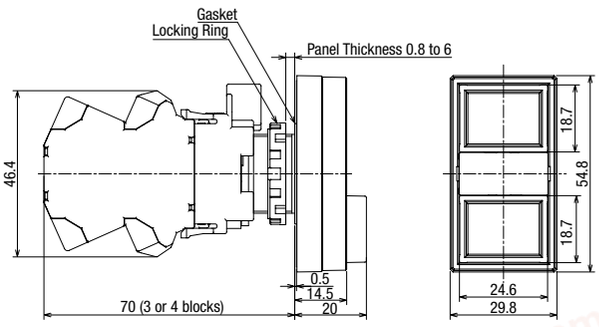

With Pilot Light

Flush–Flush

1 to 2 contacts

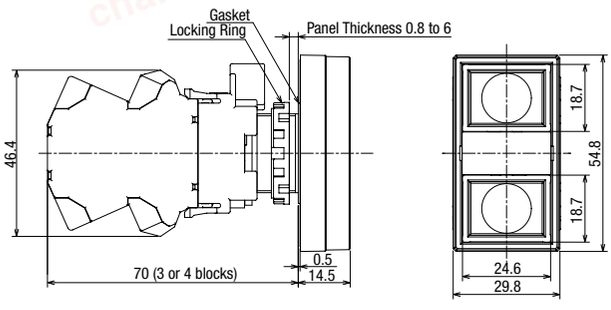

3 to 4 contacts

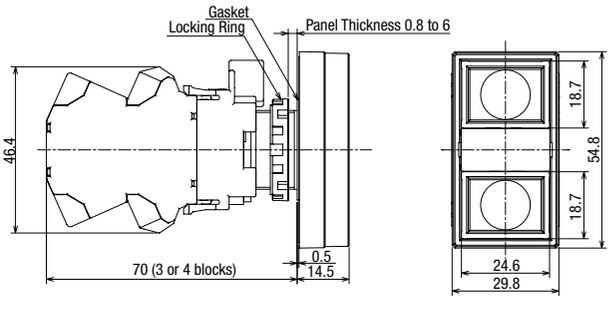

Flush–Extended

1 to 2 contacts

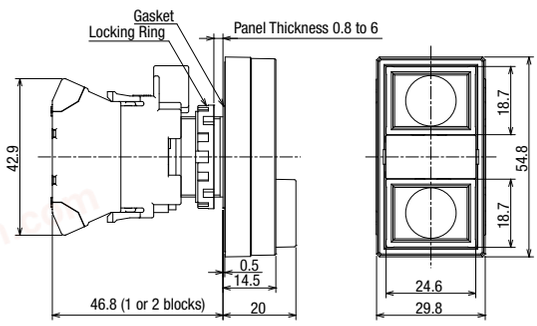

3 to 4 contacts

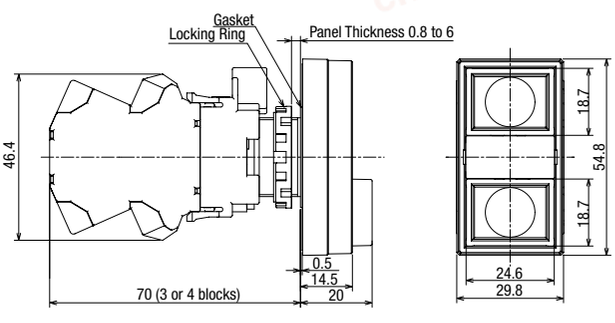

chanhvinh.com

Dual Pushbuttons

Dual Pushbuttons Part No. Example

Assembled and sub-assembled unit

Assembled (without pilot light)

HW7D - B 1 1 P 10 10 GR 1

①Operation code
1: Momentary
2: Interlocking

②Button style code
1: Flush–Flush
2: Flush–Extended

③Contact arrangement code (top button)

④Contact arrangement code (bottom button)

⑥Button color code
GR: Top Button Green
Bottom Button Red
WB: Top Button White
Bottom Button Black

⑦Button Legends Code
Blank: Blank
1: I & ON / O & OFF

Top button	Bottom button	Contact configuration	
		Top button	Bottom button
1NO	1NC	10	01
1NO	1NO	10	10
1NO-1NC	1NO-1NC	11	11
2NO	2NO	20	02

Operator unit (without pilot light)

HW7D - B 1 1 GR 1 -PS

①Operation code
1: Momentary
2: Interlocking

②Button style code
1: Flush–Flush
2: Flush–Extended

⑥Button color code
GR: Top Button Green
Bottom Button Red
WB: Top Button White
Bottom Button Black

⑦Button Legends Code
Blank: Blank
1: I & ON / O & OFF

Contact unit

HW- CN P 20

④Contact configuration code
(see page 23)

Assembled (with pilot light)

HW7D - L 1 1 P 11 20 H2 PW GR 1

①Operation code
1: Momentary
2: Interlocking

②Button style code
1: Flush–Flush
2: Flush–Extended

③Contact arrangement code (top button)

④Contact arrangement code (bottom button)

⑤Rated voltage code
Q2: 6V AC/DC
Q3: 12V AC/DC
Q4: 24V AC/DC
QH2: 100/120V AC/DC
QM: 200-220V AC
QM4: 220-240V AC

⑥Button color code
GR: Top Button Green
Bottom Button Red
WB: Top Button White
Bottom Button Black

⑦Button Legends Code
Blank: Blank
1: I & ON / O & OFF

Top button	Bottom button	Contact configuration	
		Top button	Bottom button
1NO	1NC	10	01
1NO	1NO	10	10
1NO-1NC	1NO-1NC	11	11
2NO	2NO	20	02

Operator unit (with pilot light)

HW7D - L 1 1 PW GR 1 -PS

①Operation code
1: Momentary
2: Interlocking

②Button style code
1: Flush–Flush
2: Flush–Extended

⑥Button color code
GR: Top Button Green
Bottom Button Red
WB: Top Button White
Bottom Button Black

⑦Button Legends Code
Blank: Blank
1: I & ON / O & OFF

Contact unit (for illuminated unit)

HW- CN P 20 Q0

④Contact configuration code
(see page 24)

• LED lamps are not supplied.

LED Lamp

LSRD - 6

⑤Rated Voltage code

6	: 6V AC/DC	**H2**	: 100/120V AC/DC
1	: 12V AC/DC	**M2**	: 200/220V AC
2	: 24V AC/DC	**M4**	: 230/240V AC

Selector Switches (Knob Operator)

Assembled



Package Quantity: 1

Shape	No. of Positions	Contact Configuration (Code)	Contact Block: Mounting Position	Contact Block: Contact		Operator Position: 1	Operator Position: 2		Cam Code	Maintained (1 2)	
HW1S 	90° 2-position	1NO (10)	(1)	NO			●		—	HW1S-2TP10	
			(3)	—		Dummy					
		1NC (01)	(1)	—		Dummy				HW1S-2TP01	
			(3)	NC		●					
		1NO-1NC (11)	(1)	NO			●			HW1S-2TP11	
			(3)	NC		●					
		2NO (20)	(1)	NO			●			HW1S-2TP20	
			(3)	NO			●				
		2NO-2NC (22)	(1)	NONC	NO		●			HW1S-2TP22	
					NC	●					
			(3)	NONC	NO		●				
					NC	●					

Shape	No. of Positions	Contact Configuration (Code)	Contact Block: Mounting Position	Contact Block: Contact		Operator Position: 1	Operator Position: 0	Operator Position: 2		Maintained (1 0 2)	Spring return two-way (1 0 2)
	45° 3-position	2NO (20)	(1)	NO		●			—	HW1S-3TP20	HW1S-33TP20
			(3)	NO				●			
		2NO-1NC (21N1) ★☆	(1)	NONC	NO	●			J	HW1S-2JTP30N1	
					NC			●			
			(3)	NO	NO			●			
		2NO-2NC (22)	(1)	NONC	NO	●			—	HW1S-3TP22	
					NC			▬			
			(3)	NONC	NO			●			
					NC			▬			
		4NO (40)	(1)	2NO	NO	●				HW1S-3TP40	
					NO	●					
			(3)	2NO	NO			●			
					NO			●			

- On the contact configuration marked with ★ in the table above, the rated load switching current is reduced to a half of the related current of the contact block. The rated insulation voltage and the rated thermal current remain unchanged.
- On the contact configuration marked with ☆ in the table above, contacts may overlap when the operator position is changed.
- Knob operator: white indicator on black body
- Selector switches with 1 contact block contain 2 dummy blocks. Selector switches with 2 contact blocks contain 1 dummy block.
- Turn the operator to each position accurately.

• For other contact configuration or operator position, select from sub-assembled units (page 27 to 28).

Contact Block Mounting Position



Note) (2) can only be mounted with a dummy block.

Dimensions

All dimensions in mm.

1 to 2 contacts

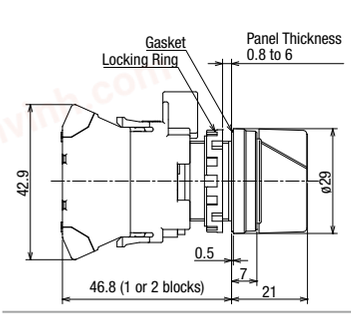

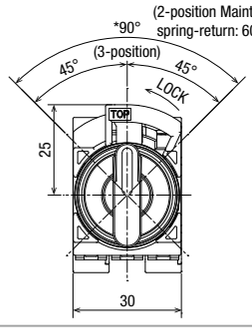

3 to 4 contacts

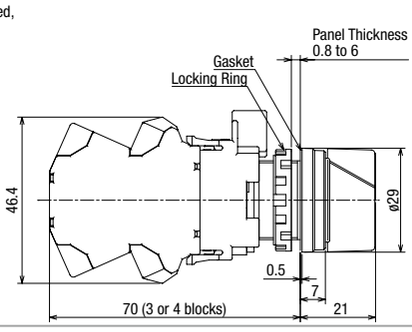

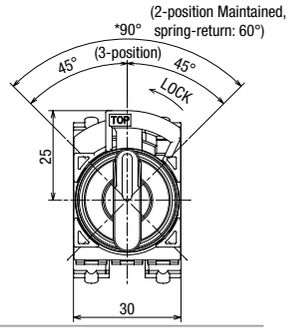

chanhvinh.com

Selector Switches (Knob / Lever Operator) 2-Position

Sub-Assembled

When ordering, specify the sub-assembled ordering no. See page 26 for available assembled products.

Assembled = Operator unit + Contact unit (Contact block, dummy block, connecting unit)





knob operator



Lever operator





90° 2-position

Package Quantity: 1

<Reference> Assembled Part No.									Operator Unit Ordering No.		Contact Unit	
No. of Positions	Contact Configuration (Code)	Contact Block: Mounting Position	Contact Block: Contact	Operator Position: 1	Operator Position: 2		Cam Code	Operator Position Code: Maintained 1 2 / <Reference> Assembled Part No.	④ Operator type	Operator Position Code: Maintained (90°) 1 2 / Part No. (Ordering No.)	Shape	Part No. (Ordering No.)
90° 2-position	1NO (10)	(1)	NO		●		—	HW1S-2④P10	Knob Operator	HW1S-2④-PS		HW-CNP10
		(3)	—	Dummy								
	1NC (01)	(1)	—	Dummy				HW1S-2④P01				HW-CNP01
		(3)	NC	●								
	1NO-1NC (11)	(1)	NO		●			HW1S-2④P11	Lever Operator			HW-CNP11
		(3)	NC	●								
	2NO (20)	(1)	NO		●			HW1S-2④P20				HW-CNP20
		(3)	NO		●							
	2NC (02)	(1)	NC	●				HW1S-2④P02				HW-CNP02
		(3)	NC	●								
	2NO-2NC (22)	(1)	NO		●			HW1S-2④22				HW-CNP22
		(2)	NC	●								
		(3)	NO		●							
		(4)	NC	●								
	3NO-1NC (31N1)	(1)	NC	●				HW1S-2④31				HW-CNP31
		(3)	NO		●							
		(4)	NO		●							
		(5)	NO		●							
	4NO (40)	(1)	NO		●			HW1S-2④40				HW-CNP40
		(3)	NO		●							
		(4)	NO		●							
		(5)	NO		●							
	3NC (03N2)	(1)	NC	●				HW1S-2④03N2				HW-CNP03N2
			NC	●								
		(3)	NC	●								
	2NO-1NC (21N1)	(1)	2NO	NO		●		HW1S-2④21N1				HW-CNP21N1
				NO		●						
		(3)	NC	NC	●							

90° 2-position Reversed Cam

Package Quantity: 1

<Reference> Assembled Part No.								Operator Unit Ordering No.		Contact Unit	
No. of Positions	Contact Configuration (Code)	Contact Block: Mounting Position	Contact Block: Contact	Operator Position: 2	Operator Position: 1	Cam Code	Operator position code: Maintained 1 2 / <Reference> Assembled Part No.	Shape	Operator position code: Maintained (90°) 1 2 / Part No. (Ordering No.)	Shape	Part No. (Ordering No.)
90° 2-position	2NC (02)	(1)	NC		●	J	HW1S-2J④TP02	Knob Operator / Lever Operator	HW1S-2J④-PS		HW-CNP02
		(3)	NC		●						

• For part no. other than maintained position, see Part No. Example on page 29.

Note: Turn the operator to each position accurately.

• Specify an operator unit code in place of ④ in the Part No.

④Operator Unit Code

Code	Operator style	Code	Operator style
T	Knob Operator	L	Lever Operator

For Part No. (Ordering No.)/ mounting positions of contact units, see page 51.

chanhvinh.com

Selector Switches (Knob / Lever Operator) 3-Position

Sub-Assembled When ordering, specify the sub-assembled ordering no. See page 26 for available assembled products.

Assembled = Operator unit + Contact unit (Contact block, dummy block, connecting unit)





knob operator



Lever operator



45° 3-position

Package Quantity: 1

<Reference> Assembled Part No.										Operator Unit Ordering No.		Contact unit	
No. of Positions	Contact Configuration (Code)	Contact Block		Operator Position			Cam Code	Operator position code: Maintained (1 0 2) <Reference> Assembled Part No.		④ Operator type	Operator position code: Maintained (1 0 2) Part No. (Ordering No.)	Shape	Part No. (Ordering No.)
		Mounting Position	Contact	1	0	2							
45° 3-position	1NO-1NC (11)	(1)	NO	●			—	HW1S-3④P11		Knob Operator	HW1S-3④-PS		HW-CNP11
		(3)	NC		▬								
	1NO-1NC (11N1)	(1)	NC			▬		HW1S-3④P11N1					HW-CNP11N1
		(3)	NO										
	2NO (20)	(1)	NO	●				HW1S-3④P20					HHW-CNP20
		(3)	NO			●							
	2NC (02)	(1)	NC			▬		HW1S-3④P02		Lever Operator			HW-CNP02
		(3)	NC		▬								
	1NO-1NC (11N1) ★☆	(1)	NC		●		J	HW1S-3J④P11N1			HW1S-3J④-PS		HW-CNP11N1
		(3)	NO			●							
	2NO-1NC (21N3) ★☆	(1)	NONC	NO ●			J	HW1S-3J④P21N3					HW-CNP30N1
				NC	●								
		(3)	NO			●							
	2NO-2NC (22)	(1)	NONC	NO ●				HW1S-3④P22N1			HW1S-3④-PS		HW-CNP22N1
				NC	▬								
		(3)	NONC	NO		●							
				NC	▬								
	2NO-2NC (22N2)	(1)	2NC	NO		▬		HW1S-3④P22N2					HW-CNP22N2
				NC	▬								
		(3)	2NO	NO									
				NC		●							
	4NO (40)	(1)	2NO	NO ●				HW1S-3④P40					HW-CNP40
				NC ●									
		(3)	2NO	NO									
				NC		●							
	4NC (04)	(1)	2NC	NC		▬		HW1S-3④P04					HW-CNP04
				NC	▬								
		(3)	2NC	NC	▬								
				NC	▬								

- On the contact configuration marked with ★ in the table above, the rated load switching current is reduced to a half of the related current of the contact block. The rated insulation voltage and the rated thermal current remain unchanged.
- On the contact configuration marked with ☆ in the table above, contacts may overlap when the operator position is changed.
- For part no. other than maintained position, see Part No. Example on page 29.
- Specify an operator unit code in place of ④ in the Part No.

④Operator Unit Code

Code	Operator style	Code	Operator style
T	Knob Operator	L	Lever Operator

Note: Turn the operator to each position accurately.

Contact Block Mounting Position

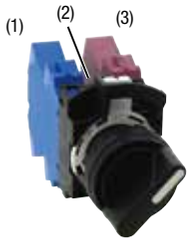

Note) (2) can only be mounted with a dummy block.

For Part No. (Ordering No.)/ mounting positions of contact units, see page 51.

chanhvinh.com

Selector Switches (Knob / Lever Operator)

Selector Switches Part No. Example

Assembled and sub-assembled unit

Assembled (Without Pilot Light)

HW1S - 2 J T P 10

- ①Operator position code:
  - **2**: 2-position, maintained
  - **21**: 2-position, spring return from right
  - **3**: 3-position, maintained
  - **31**: 3-position, spring return from right
  - **32**: 3-position, spring return from left
  - **33**: 3-position, spring return two way
- ②Cam code
  - **J**: Specified (①Operator position: 2, 3 only)
  - **Blank**: Not specified
- ④Operator unit code
  - **T**: Knob Operator
  - **L**: Lever Operator
- ③Contact configuration code (see page 27)

Operator (Without Pilot Light)

HW1S - 2 J L - PS

- ①Operator position code
  - **2**: 2-position, maintained
  - **21**: 2-position, spring return from right
  - **3**: 3-position, maintained
  - **31**: 3-position, spring return from right
  - **32**: 3-position, spring return from left
  - **33**: 3-position, spring return two way
- ②Cam code
  - **J**: Specified (①Operator position: 2, 3 only)
  - **Blank**: Not specified
- ④ Operator unit code
  - **T**: Knob Operator
  - **L**: Lever Operator

Contact Unit

HW- CN P 10

- ③Contact configuration code (see page 27, 28)

① Operator position code

Maintained (90° 2-position)		Spring Return (60° 2-position)
		Spring Return from Right 
Cam code: blank	Cam code: J	Cam code: blank

Maintained (45° 3-position)	Spring Return (45° 3-position)		
	Spring return from right	Spring return from left	Spring return two-way
			
Cam code: Blank, J, or S	Cam code: blank		

- For available assembled products, see table on page 26.

Pin tumbler keys can be purchased only as a sub-assembled product.

Key Selector Switches (Disc Tumbler Key)

Assembled



Package Quantity: 1

Name / Shape	No. of Positions	Contact Configuration (Code)	Contact Block: Mounting Position	Contact Block: Contact		Operator Position: 1	Operator Position: 2	Operator Position:	Cam Code	Operator position code: Maintained (90°)	—
Disc Tumbler Key HW1K  (NC contact only)	90° 2-position	1NO (10)	(1)	NO			●		—	HW1K-2AP10 (Key removable in all positions) HW1K-2BP10 (Key removable at left)	
			(3)	—		Dummy					
		1NO-1NC (11)	(1)	NO			●			HW1K-2AP11 (Key removable in all positions) HW1K-2BP11 (Key removable at left)	
			(3)	NC		●					
		2NO (20)	(1)	NO			●			HW1K-2AP20 (Key removable in all positions) HW1K-2BP20 (Key removable at left)	
			(3)	NO			●				
		2NO-2NC (22)	(1)	NONC	NO		●			HW1K-2AP22N2 (Key removable in all positions) HW1K-2BP22N2 (Key removable at left)	
					NC	●					
			(3)	NONC	NO		●				
					NC	●					

Name / Shape	No. of Positions	Contact Code	Contact Block: Mounting Position	Contact Block: Contact		Operator Position: 1	Operator Position: 0	Operator Position: 2	Cam Code	Operator position code: Maintained	Operator position code: Spring return from right
	45° 3-position	2NO (20)	(1)	NO		●			—	HW1K-3AP20 (Key removable in all positions) HW1K-3BP20 (Key removable at left/center) HW1K-3DP20 (Key removable at center)	
			(3)	NO				●			
		1NO-1NC (11N1)	(1)	NC			●		J	HW1K-3JBP11N1 (Key removable at left/center) HW1K-3JGP11N1 (Key removable at left)	
			(3)	NO				●			
		2NO-2NC (22)	(1)	NONC	NO	●			—		HW1K-31BP22 (Key removable at left/center) HW1K-31GP22 (Key removable at left)
					NC		▬				
			(3)	NONC	NO			●	—		
					NC	▬					
		2a-2b (22N2)	(1)	2NC	NC		▬		—		HW1K-31BP22N2 (Key removable at left/center) HW1K-31GP22N2 (Key removable at left)
					NC		▬				
			(1)	2NO	NO			●	—		
					NO			●			

- Selector switches with 1 contact block contain 2 dummy blocks. Selector switches with 2 contact blocks contain 1 dummy block.
- Standard key number (231) is available for assembled products. *For numbers other than standard key numbers, contact IDEC.

• For other contact configuration or operator position, select from sub-assembled units (page 31 to 32).

Key removal position

① 90° 2-position

Key Retained Position (Cam code: blank)	
A: Key removable in all positions 	B: Key removable at left 

①② : Key removal position ❶❷ : Key retained position

② 45° 3-position

Key Retained Position			
A: Key removable in all positions 	B: Key removable at left / center 	D: Key removable at center 	G: Key removable at left 

⓪①② : Key removal position ❶❶❷ : Key retained position

Note: The key cannot be removed in a spring return position.

Contact Block Mounting Position

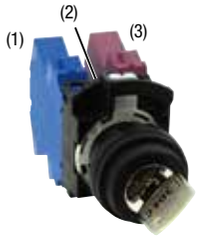

Note) (2) can only be mounted with a dummy block.

chanhvinh.com

Pin tumbler keys can be purchased only as a sub-assembled product.

Key Selector Switches (Disc Tumbler Key / Pin Tumbler Key) 2-Position

Sub-Assembled

When ordering, specify the sub-assembled ordering no. See page 30 for available assembled products.

Assembled = Operator unit + Contact unit (Contact block, dummy block, connecting unit)





Disc Tumbler



Pin Tumbler





90° 2-position

Package Quantity: 1

<Reference> Assembled Part No.										Operator Unit Ordering No.		Contact Unit	
No. of Positions	Contact Configuration (Code)	Contact Block			Operator Position			Cam Code	Operator position code	③Key Operator Type	Operator position code	Shape	Part No. (Ordering No.)
		Mounting Position	Contact		1	2			Maintained 1 2 <Reference> Assembled Part No.		Maintained 1 2 Part No. (Ordering No.)		
90° 2-position	1NO (10)	(1)	NO			●		—	HW1K-2③④P10	Disc Tumbler	HW1K-2③④⑥-PS		HW-CNP10
		(3)	—		Dummy								
	1NC (01)	(1)	—		Dummy				HW1K-2③④P01				HW-CNP01
		(3)	NC		●								
	1NO-1NC (11)	(1)	NO			●			HW1K-2③④P11				HW-CNP11
		(3)	NC		●								
	2NO (20)	(1)	NO			●			HW1K-2③④P20	Pin Tumbler			HW-CNP20
		(3)	NO			●							
	2NC (02)	(1)	NC		●				HW1K-2③④P02				HW-CNP02
		(3)	NC		●								
	2NO-2NC (22)	(1)	NONC	NO		●			HW1K-2③④P22				HW-CNP22
				NC	●								
		(3)	NONC	NO		●							
				NC	●								
	3NO-1NC (31)	(1)	NONC	NO		●			HW1K-2③④P31				HW-CNP31
				NO		●							
		(3)	NONC	NO		●							
				NC	●								
	4NO (40)	(1)	2NO	NO		●			HW1K-2③④P40				HW-CNP40
				NO		●							
		(3)	2NO	NO		●							
				NO		●							
	3NC (03N2)	(1)	2NC	NC	●				HW1K-2③④P03N2				HW-CNP03N2
				NC	●								
		(3)	NC	NC	●								
	2NO-2NC (21N1)	(1)	2NO	NO		●			HW1K-2③④P21N1				HW-CNP21N1
				NO		●							
		(3)	NO	NC	●								

- For part no. other than maintained position, see Part No. Example on page 33.
- Each selector key switch is supplied with two keys.
- Specify the key style in ③.

③Key type code

Code	Key Operator Shape
Blank	Disc tumbler
P	Pin tumbler

- Specify the desired key removal position in ④.
- Specify the key number in ⑥.

} See page 33 Part No. Developent for details.

For Part No. (Ordering No.)/ mounting positions of contact units, see page 51.

chanhvinh.com

Pin tumbler keys can be purchased only as a sub-assembled product.

Key Selector Switches (Disc Tumbler Key / Pin Tumbler Key) 3-Position

Sub-Assembled

When ordering, specify the sub-assembled ordering no. See page 30 for available assembled products.

Assembled = Operator unit + Contact unit (Contact block, dummy block, connecting unit)





Disc Tumbler



Pin Tumbler





45° 3-position

Package Quantity: 1

<Reference> Assembled Part No.										Operator Unit Ordering No.		Contact Unit	
No. of Positions	Contact Configuration (Code)	Contact Block: Mounting Position	Contact Block: Contact		Operator Position: 1	Operator Position: 0	Operator Position: 2	Cam Code	Operator position code: Maintained (1 0 2) <Reference> Assembled Part No.	③Key Operator Type	Operator position code: Maintained (1 0 2) Part No. (Ordering No.)	Shape	Part No. (Ordering No.)
45° 3-position	1NO-1NC (11)	(1)	NO		●			—	HW1K-3③④P11	Disc Tumbler	HW1K-3④⑥-PS		HW-CNP11
		(3)	NC										
	1NO-1NC (11N1)	(1)	NC						HW1K-3③④P11N1				HW-CNP11N1
		(3)	NO				●						
	2NO (20)	(1)	NO		●				HW1K-3③④P20				HHW-CNP20
		(3)	NO				●						
	2NC (02)	(1)	NC						HW1K-3③④P02	Pin Tumbler			HW-CNP02
		(3)	NC										
	1NO-1NC (11N1) ★☆	(1)	NC			●		J	HW1K-3J③④P11N1		HW1K-3J④⑥-PS		HW-CNP11N1
		(3)	NO				●						
	2NO-1NC (211N3) ★☆	(1)	NC		●			J	HW1K-3J③④P11N3				HW-CNP30N1
						●							
		(3)	NO				●						
	2NO-2NC (22)	(1)	NONC	NO	●			—	HW1K-3③④P22		HW1K-3④⑥-PS		HW-CNP22N1
				NC									
		(3)	NONC	NO			●						
				NC									
	2NO-2NC (22N2)	(1)	NONC	NC					HW1K-3③④P22N2				HW-CNP22N2
				NC									
		(3)	NONC	NO			●						
				NO			●						
	4NO (40)	(1)	NONC	NO	●				HW1K-3③④P40				HW-CNP40
				NO	●								
		(3)	NONC	NO			●						
				NO			●						
	4NC (04)	(1)	NONC	NC					HW1K-3③④P04				HW-CNP04
				NC									
		(3)	NONC	NC									
				NC									

- On the contact arrangement marked with ★ in the table above, the rated load switching current is reduced to a half of the related current of the contact block. The rated insulation voltage and the rated thermal current remain unchanged.
- For models with ☆, contacts may overlap when the operator position is changed.
- For part no. other than maintained position, see Part No. Example on page 33.
- Each selector key switch is supplied with two keys.
- Specify the key style in ③.

③Key type code

Code	Key Operator Shape
Blank	Disc tumbler
P	Pin tumbler

- Specify the desired key removal position in ④.
- Specify the key number in ⑥.

} See page 33 Part No. Developent for details.

Contact Block Mounting Position

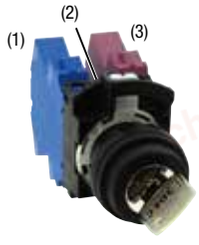

Note) (2) can only be mounted with a dummy block.

For Part No. (Ordering No.)/ mounting positions of contact units, see page 51.

chanhvinh.com

Key Selector Switches (Disc Tumbler Key / Pin Tumbler Key)

Key Selector Switches Part No. Example

Assembled and sub-assembled unit

Assembled Part No. Example

HW1K - 2 J P A P 01 - 501

①Operator position code:
- **2**: 2-position, maintained
- **21**: 2-position, spring return from right
- **3**: 3-position, maintained
- **31**: 3-position, spring return from right
- **32**: 3-position, spring return from left
- **33**: 3-position, spring return two way

②Cam code
- **J**: Specified (①Operator position: 2, 3 only)
- **Blank**: Not specified

③Key Style
- **Blank**: Disc Tumbler Key
- **P**: Pin Tumbler Key

④Key removal position

2-position
- **A**: Removable in all positions
- **B**: Removable in the left only
- **C**: Removable in the right only

3-position
- **A**: Removable in all positions
- **B**: Removable in the left and center
- **C**: Removable in the right and center
- **D**: Removable in center only
- **E**: Removable in right and left
- **G**: Removable in left only
- **H**: Removable in right only

⑤Contact configuration code

⑥Key No.

Disc Tumbler Key
- **Blank**: Standard (231)

*For key numbers other than the standard key number, contact us.

Pin Tumbler Key
- **Blank**: Standard (500)
- **-501 to -515** (non-standard)

Note: The key number is engraved on the key cylinder.

Operator unit

HW1K - 2 J P A - 501 - PS

①Operator position code:
- **2**: 2-position, maintained
- **21**: 2-position, spring return from right
- **3**: 3-position, maintained
- **31**: 3-position, spring return from right
- **32**: 3-position, spring return from left
- **33**: 3-position, spring return two way

②Cam code
- **J**: Specified (①Operator position: 2, 3 only)
- **Blank**: Not specified

③Key Style
- **Blank**: Disc Tumbler Key
- **P**: Pin Tumbler Key

④Key removal position

2-position
- **A**: Removable in all positions
- **B**: Removable in the left only
- **C**: Removable in the right only

3-position
- **A**: Removable in all positions
- **B**: Removable in the left and center
- **C**: Removable in the right and center
- **D**: Removable in center only
- **E**: Removable in right and left
- **G**: Removable in left only
- **H**: Removable in right only

⑤Contact configuration code

⑥Key No.

Disc Tumbler Key
- **Blank**: Standard (231)

*For key numbers other than the standard key number, contact us.

Pin Tumbler Key
- **Blank**: Standard (500)
- **-501 to -515** (non-standard)

Note: The key number is engraved on the key cylinder.

Contact unit

HW- CN P 10

⑤Contact configuration code (see page 31, 32)

①Operator position code

Maintained (90° 2-position)		Spring Return (60° 2-position)
		Spring Return from Right 
Cam code: blank	Cam code: J	Cam code: blank

Maintained (45° 3-position)	Spring Return (45° 3-position)		
	Spring return from right	Spring return from left	Spring return two-way
	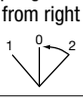		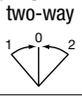
Cam code: Blank, J, or S	Cam code: blank		

• For available assembled products, see table on page 30.

④Key removal position

90° 2-position / 60° 2-position

Key Retained Position (Cam code: blank)		
A: Key removable in all positions 	B: Key removable at left 	C: Key removable at right 

Key Retained Position (Cam code: J)		
A: Key removable in all positions 	B: Key removable at left 	C: Key removable at right 

45° 3-position

Key Retained Position			
A: Key removable in all positions 	B: Key removable at left / center 	C: Key removable at center / right 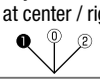	D: Key removable at center 
E: Key removable at right / left 	G: Key removable at left 	H: Key removable at right 	

⓪①②: Key removal position ❶❷: Key retained position

Note: The key cannot be removed in a spring return position.

Key Selector Switches (Pin Tumbler Key)

All dimensions in mm.

Dimensions

Disc Tumbler Key

1 to 2 contacts

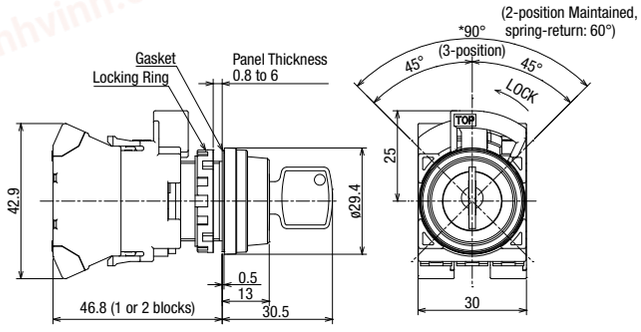

3 to 4 contacts

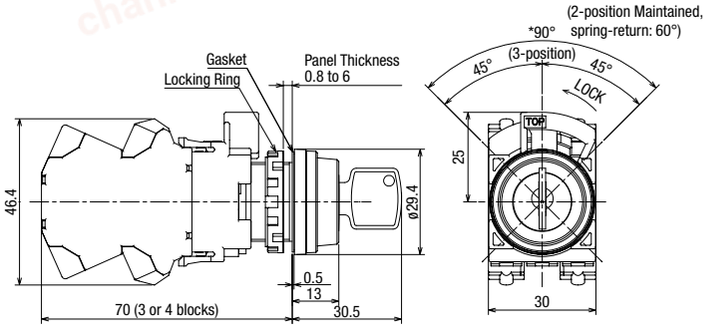

Pin Tumbler Key

1 to 2 contacts

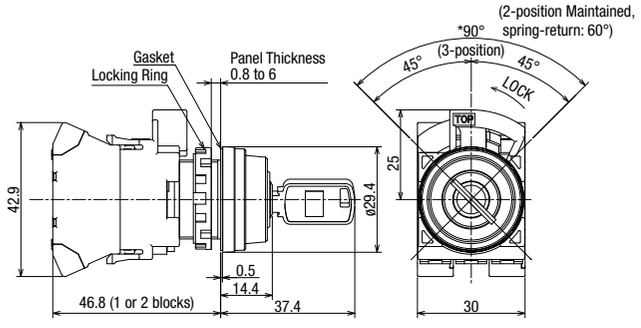

3 to 4 contacts

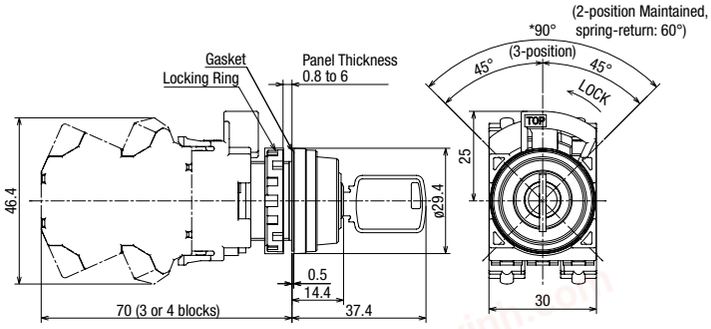

Lever operator can be purchased only as a sub-assembled product.

Illuminated Selector Switches (Knob / Lever Operator) (LED)

Assembled



Package Quantity: 1

Name / Shape	No. of Positions	Contact Configuration Table: Contact Configuration	Contact Block: Mounting Position	Contact Block: Contact	Operator Position: 1	Operator Position: 2	Operator Position:	Operating Voltage	Functional Specifications: Maintained 1 2	Functional Specifications: —	⑥ Illumination Color Code
	90° 2-position	1NO-1NC (11)	(1)	NO		●		24V AC/DC	HW1F-2P11Q4⑥	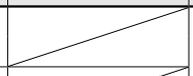	**R** (red) **G** (green) **PW** (pure white)
			(3)	NC	●						
		2NO (20)	(1)	NO		●			HW1F-2P20Q4⑥	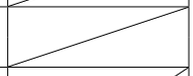	
			(3)	NO		●					
		2NO-2NC (22)	(1)	NONC NO		●			HW1F-2P22Q4⑥	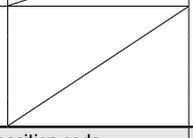	
				NONC NC	●						
			(3)	NONC NO		●					
				NONC NC	●						

No. of Positions	Contact Configuration Table: Contact Configuration	Contact Block: Mounting Position	Contact Block: Contact	Operator Position: 1	Operator Position: 0	Operator Position: 2	Cam Code	Operator position code: Maintained 1 0 2	Operator position code: Spring return two-way 1 0 2	⑥ Illumination Color Code
No. of Positions	Contact Configuration	Mounting Position	Contact	1	0	2	Cam Code	Maintained	Spring return two-way	⑥ Illumination Color Code
45° 3-position	2NO (20)	(1)	NO	●			24V AC/DC	HW1F-3P20Q4⑥	HW1F-33P20Q4⑥	**R** (red) **G** (green) **PW** (pure white
		(3)	NO			●				

- Specify an illumination color code in place of ⑥ in the Part No.
- Turn the operator to each position accurately.

• For other contact configuration or operator position, select from sub-assembled units. (page 36 to 37).

Contact Block Mounting Position

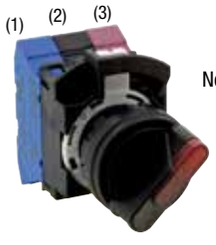

Note) (2) can only be mounted with a full voltage adapter.

Illuminated Selector Switches (Knob / Lever Operator) (LED) 2-Position

Sub-Assembled When ordering, specify the sub-assembled ordering no. See page 35 for available assembled products.

Assembled = Operator unit + LED Lamp + Contact unit (illuminated) (Contact block, LED module, connecting unit)







Knob operator Lever operator

90° 2-position

Package Quantity: 1

<Reference> Assembled Part No									Operator Unit		Contact Unit (Illuminated)	
No. of Positions	Contact Configuration	Contact Block			Operator Position			Cam Code	Operator position code			
		Mounting Position	Contact		1	2			Maintained 1 2 <Reference> Assembled Part No.		Name / Shape	Operator position code Maintained 1 2 Part No. (Ordering No.)	Shape	Part No. (Ordering No.)
90° 2-position	1NO (10)	(1)	NO			●		—	HW1F-2③P10⑤⑥		Knob Operator	HW1F-2③⑥-PS		HW-CNP10Q0
		(3)	—		Dummy									
	1NC (01)	(1)	—		Dummy				HW1F-2③P01⑤⑥					HW-CNP01Q0
		(3)	NC		●									
	1NO-1NC (11)	(1)	NO			●			HW1F-2③P11⑤⑥		Lever Operator			HW-CNP11Q0
		(3)	NC		●									
	2NO (20)	(1)	NO			●			HW1F-2③P20⑤⑥					HW-CNP20Q0
		(3)	NO			●								
	2NC (02)	(1)	NC		●				HW1F-2③P02⑤⑥					HW-CNP02Q0
		(3)	NC		●									
	2NO-2NC (22)	(1)	NONC	NO		●			HW1F-2③P22⑤⑥					HW-CNP22Q0
				NC	●									
		(3)	NONC	NO		●								
				NC	●									
	3NO-1NC (31)	(1)	NONC	NO		●			HW1F-2③P31⑤⑥					HW-CNP31Q0
				NO		●								
		(3)	NONC	NO		●								
				NC	●									
	4NO (40)	(1)	2NO	NO		●			HW1F-2③P40⑤⑥					HW-CNP40Q0
				NO		●								
		(3)	2NO	NO		●								
				NO		●								
	3NC (03N2)	(1)	2NC	NC	●				HW1F-2③P03N2⑤⑥					HW-CNP03N2Q0
				NC	●									
		(3)	NC	NC	●									
	2NO-2NC (21N1)	(1)	2NO	NO		●			HW1F-2③P21N1⑤⑥					HW-CNP21N1Q0
				NO		●								
		(3)	NO	NC	●									

- Specify an operator unit code in place of ③ in the Part No.

③Operator Unit Code

Code	Operator style
Blank	Knob Operator
L	Lever Operator

- Specify a rated voltage code in place of ⑤ in the Part No.

Code	Rated voltage	Code	Rated voltage
Q2	6V AC/DC	QH2	100/120V AC/DC
Q3	12V AC/DC	QM	200/220V AC
Q4	24V AC/DC	QM4	230/240V AC

- Specify an illumination color code in place of ⑥ in the Part No.
R (red), G (green), Y (yellow), A (amber), S (blue), PW (pure white)

- For part no. other than maintained position, see Part No. Example on page 38.

Note) LED lamp is not supplied. When ordering contact units (illuminated) selected LED from below table.

LED lamp (package quantity:1)	
	
Rated Voltage	Part No. (Ordering No.)
6V AC/DC	LSRD-6
12V AC/DC	LSRD-1
24V AC/DC	LSRD-2
100/120V AC/DC	LSRD-H2
200/220V AC	LSRD-M2
230/240V AC	LSRD-M4

For Part No. (Ordering No.)/ mounting positions of contact units, see page 51.

Illuminated Selector Switches (Knob / Lever Operator) (LED) 3-Position

Sub-Assembled

When ordering, specify the sub-assembled ordering no. See page 35 for available assembled products.

45° 3-position

Package Quantity: 1

<Reference> Assembled Part No										Operator Unit		Contact Unit (Illuminated)	
No. of Positions	Contact Configuration	Contact Block			Operator Position				Operator position code	Name / Shape	Operator position code	Shape	Part No. (Ordering No.)
									Maintained 1 0 2		Maintained 1 0 2		
		Mounting Position	Contact		1	0	2		<Reference> Assembled Part No.		Part No. (Ordering No.)		
45° 3-position	1NO-1NC (11)	(1)	NO		●				HW1F-3③P11⑤⑥	Knob Operator	HW1F-3③⑥-PS		HW-CNP11Q0
		(3)	NC		▬								
	1NO-1NC (11N1)	(1)	NC			▬			HW1F-3③P11N1⑤⑥				HW-CNP11N1Q0
		(3)	NO				●						
	2NO (20)	(1)	NO		●				HW1F-3③P20⑤⑥	Lever Operator			HHW-CNP20Q0
		(3)	NO				●						
	2NC (02)	(1)	NC			▬			HW1F-3③P02⑤⑥				HW-CNP02Q0
		(3)	NC		▬								
	1NO-1NC (11N1) ★☆	(1)	NC			●			HW1F-3J③P11N1⑤⑥		HW1F-3J③⑥-PS		HW-CNP11N1Q0
		(3)	NO				●						
	2NO-1NC (21N3) ★☆	(1)	NONC	NO	●				HW1F-3J③P21N3⑤⑥				HW-CNP30N1Q0
				NC		●							
		(3)	NO				●						
	2NO-2NC (22)	(1)	NONC	NO	●				HW1F-3③P22⑤⑥		HW1F-3③⑥-PS		HW-CNP22N1Q0
				NC			▬						
		(3)	NONC	NO				●					
				NC		▬							
	2NO-2NC (22N2)	(1)	2NC	NO			▬		HW1F-3③P22N2⑤⑥				HW-CNP22N2Q0
				NC			▬						
		(3)	2NO	NO				●					
				NC				●					
	4NO (40)	(1)	2NO	NO	●				HW1F-3③P40⑤⑥				HW-CNP40Q0
				NO	●								
		(3)	2NO	NO				●					
				NO				●					
	4NC (04)	(1)	2NC	NC			▬		HW1F-3③P04⑤⑥				HW-CNP04Q0
				NC			▬						
		(3)	2NC	NC		▬							
				NC		▬							

- Specify an operator unit code in place of ③ in the Part No.

③Operator Unit Code

Code	Operator style
Blank	Knob Operator
L	Lever Operator

- Specify a rated voltage code in place of ⑤ in the Part No.

Code	Rated voltage	Code	Rated voltage
Q2	6V AC/DC	**QH2**	100/120V AC/DC
Q3	12V AC/DC	**QM**	200/220V AC
Q4	24V AC/DC	**QM4**	230/240V AC

- Specify an illumination color code in place of ⑥ in the Part No.
R (red), G (green), Y (yellow), A (amber), S (blue), PW (pure white)

- For part no. other than maintained position, see Part No. Example on page 38.

Note) LED lamp is not supplied. When ordering contact units (illuminated) selected LED from below table.

LED lamp (package quantity:1)	
	
Rated Voltage	Part No. (Ordering No.)
6V AC/DC	LSRD-6
12V AC/DC	LSRD-1
24V AC/DC	LSRD-2
100/120V AC/DC	LSRD-H2
200/220V AC	LSRD-M2
230/240V AC	LSRD-M4

Contact Block Mounting Position

(1) (2) (3)



Note) (2) can only be mounted with a LED module.

Illuminated Selector Switches (Knob / Lever Operator) (LED)

All dimensions in mm.

Dimensions

Knob Operator

1 to 2 contacts

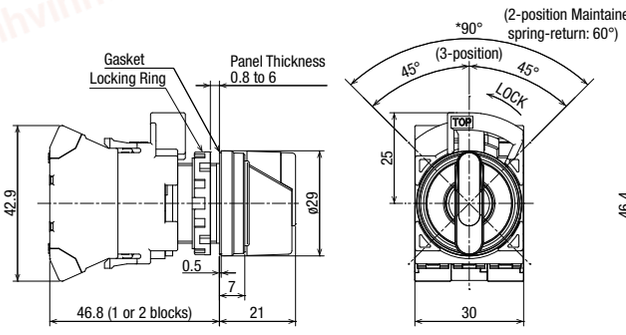

3 to 4 contacts

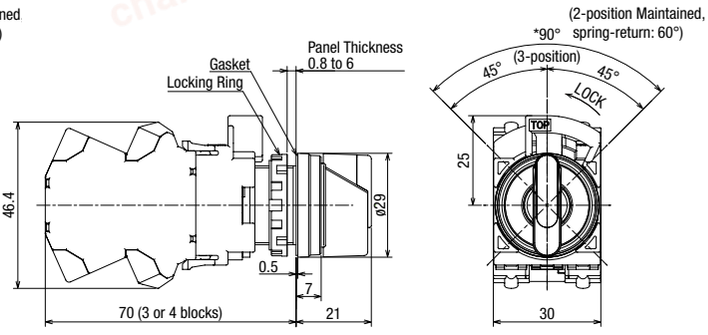

Lever Operator

1 to 2 contacts

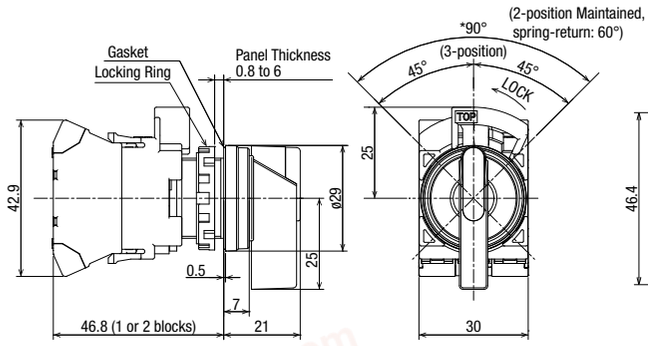

3 to 4 contacts

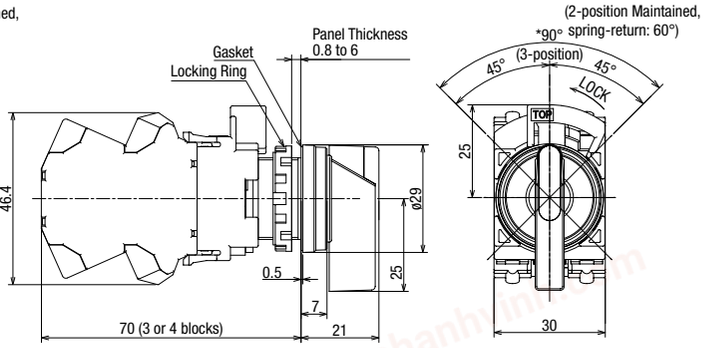

Illuminated Selector Switches Part No. Example

Assembled and sub-assembled unit

Assembled Part No. Example

HW1F - 2 J L P 11 Q4 R

①Operator position code:
2: 2-position, maintained
21: 2-position, spring return from right
3: 3-position, maintained
31: 3-position, spring return from right
32: 3-position, spring return from left
33: 3-position, spring return two way

②Cam code
J: Specified
(①Operator position: **2, 3** only)
Blank: Not specified

③Operator unit code
Blank: Knob Operator
L: Lever Operator

④Contact configuration code
(see page 35)

⑤Operating voltage
Q2 : 6V AC/DC
Q3 : 12V AC/DC
Q4 : 24V AC/DC
QH2 : 100/120V AC/DC
QM : 200/220V AC
QM4 : 200/240V AC

⑥Illuminated color code
(see page 37)

• For available assembled products, see table on page 35.

Operator unit

HW1S - 2 L R - PS

①Operator position code
2: 2-position, maintained
21: 2-position, spring return from right
3: 3-position, maintained
31: 3-position, spring return from right
32: 3-position, spring return from left
33: 3-position, spring return two way

④ Operator unit code
T: Knob Operator
L: Lever Operator

⑥Illuminated color code
(see page 37)

Contact Unit (for illuminated unit)

HW- CN P 20 Q0

④Contact configuration code
(see page 36, 37)

Note) LED lamps are not supplied.

LED Lamp

LSRD - 6

⑤Rated voltage code
6: 6V AC/DC
1: 12V AC/DC
2: 24V AC/DC
H2: 100/120V AC/DC
M2: 200/220V AC
M4: 230/240V AC

chanhvinh.com

Selector Pushbuttons

Assembled



Package Quantity: 1

Name / Shape	Circuit Code.	Contact Configuration	Contact Block		Left		Right		Ring Operator	③ Button Color Code
			Mounting Position	Contact	Normal	Push	Normal	Push	Part No. (Ordering No.)	
HW1R 	D	2NO (20)	(1)	NO		●			HW1R-2DP20③	B (black) G (green)
			(3)	NO				●		

- Specify a button color code in place of ③ in the part No.
- When operating the pushbutton selector, do not turn the operator ring or the lock lever while the button is depressed. Otherwise the pushbutton selector may be damaged.

• For other circuit codes, select from sub-assembled units (page 40).

Contact Block Mounting Position



Note) (2) can only be mounted with a dummy block.

Dimensions

All dimensions in mm.

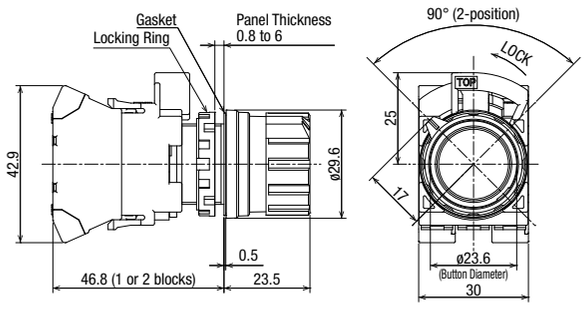

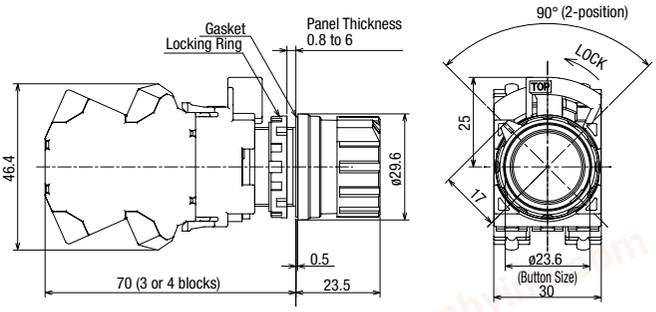

Selector Pushbuttons Part No. Example

Assembled and sub-assembled unit

Assembled Part No. Example

HW1R - 2 D P 20 B

①Circuit code

②Contact configuration code
- **11**: 1NO1NC
- **20**: 2NO
- **22**: 2NO-2NC
- **11N1**: 1NO-1NC
- **22N2**: 2NO-2NC

⑤Button color code (see page 40)

- For available assembled products, see table on page 40.

Operator unit

HW1R - 2 A B - PS

①Circuit code

③Button color code (see page 40)

Contact unit

HW - CN P 10

⑤Contact configuration code (see page 40)

chanhvinh.com

Selector Pushbuttons

Sub-Assembled

When ordering, specify the sub-assembled ordering no. See page 39 for available assembled products.

Assembled = Operator unit + Contact unit (Contact block, dummy block, connecting unit)






chanhvinh.com

<table>
<tr><th colspan="10"><Reference> Assembled Part No.</th></tr>
<tr><th rowspan="2">Circuit Code</th><th rowspan="2">Contact Configuration (Code)</th><th colspan="3" rowspan="2">Contact Block</th><th colspan="2">Left</th><th colspan="2">Right</th><th rowspan="2">Ring Operator</th><th rowspan="2">③ Button Color Code</th></tr>
<tr><th>Mounting Position</th><th colspan="2">Contact</th><th>Normal</th><th>Push</th><th>Normal</th><th>Push</th></tr>
<tr><td rowspan="8">A</td><td rowspan="2">1NO-1NC (11)</td><td>(1)</td><td colspan="2">NO</td><td></td><td>●</td><td></td><td>●</td><td rowspan="2">HW1R-2AP11③</td><td rowspan="26">B (black)
G (green)
R (red)
Y (yellow)
S (blue)
W (white)</td></tr>
<tr><td>(3)</td><td colspan="2">NC</td><td>●</td><td></td><td></td><td></td></tr>
<tr><td rowspan="2">2NO (20)</td><td>(1)</td><td colspan="2">NO</td><td></td><td>●</td><td></td><td>●</td><td rowspan="2">HW1R-2AP20③</td></tr>
<tr><td>(3)</td><td colspan="2">NO</td><td></td><td>●</td><td>▬</td><td></td></tr>
<tr><td rowspan="4">2NO-2NC (22)</td><td rowspan="2">(1)</td><td rowspan="2">2NO</td><td>NO</td><td></td><td>●</td><td></td><td></td><td rowspan="4">HW1R-2AP22N1③</td></tr>
<tr><td>NO</td><td></td><td>●</td><td></td><td></td></tr>
<tr><td rowspan="2">(3)</td><td rowspan="2">2NC</td><td>NC</td><td>●</td><td></td><td></td><td></td></tr>
<tr><td>NC</td><td>●</td><td></td><td></td><td></td></tr>
<tr><td rowspan="6">D</td><td rowspan="2">2NO (20)</td><td>(1)</td><td colspan="2">NO</td><td></td><td>●</td><td></td><td></td><td rowspan="2">HW1R-2DP20③</td></tr>
<tr><td>(3)</td><td colspan="2">NO</td><td></td><td></td><td></td><td></td></tr>
<tr><td rowspan="4">2NO-2NC (22)</td><td rowspan="2">(1)</td><td rowspan="2">NONC</td><td>NO</td><td></td><td>●</td><td></td><td></td><td rowspan="4">HW1R-2DP22③</td></tr>
<tr><td>NC</td><td>●</td><td></td><td>▬</td><td></td></tr>
<tr><td rowspan="2">(3)</td><td rowspan="2">NONC</td><td>NO</td><td></td><td></td><td></td><td></td></tr>
<tr><td>NC</td><td>▬</td><td></td><td></td><td></td></tr>
<tr><td rowspan="4">E</td><td rowspan="4">2NO-2NC (22)★</td><td rowspan="2">(1)</td><td rowspan="2">NONC</td><td>NO</td><td></td><td>●</td><td></td><td></td><td rowspan="4">HW1R-2EP22③</td></tr>
<tr><td>NC</td><td></td><td></td><td>▬</td><td></td></tr>
<tr><td rowspan="2">(3)</td><td rowspan="2">NONC</td><td>NO</td><td></td><td></td><td></td><td>●</td></tr>
<tr><td>NC</td><td>▬</td><td></td><td></td><td></td></tr>
<tr><td rowspan="4">F</td><td rowspan="4">2NO-2NC (22)★☆</td><td rowspan="2">(1)</td><td rowspan="2">NONC</td><td>NO</td><td></td><td></td><td></td><td>●</td><td rowspan="4">HW1R-2FP22③</td></tr>
<tr><td>NC</td><td></td><td></td><td>●</td><td></td></tr>
<tr><td rowspan="2">(3)</td><td rowspan="2">NONC</td><td>NO</td><td></td><td>●</td><td></td><td></td></tr>
<tr><td>NC</td><td>●</td><td></td><td></td><td></td></tr>
<tr><td rowspan="4">N</td><td rowspan="4">2NO-2NC (22N2)★☆</td><td rowspan="2">(1)</td><td rowspan="2">2NC</td><td>NC</td><td></td><td></td><td>●</td><td></td><td rowspan="4">HW1R-2NP22N2③</td></tr>
<tr><td>NC</td><td></td><td></td><td>●</td><td></td></tr>
<tr><td rowspan="2">(3)</td><td rowspan="2">2NO</td><td>NO</td><td></td><td>●</td><td></td><td>●</td></tr>
<tr><td>NO</td><td></td><td>●</td><td></td><td>●</td></tr>
<tr><td rowspan="4">T</td><td rowspan="4">2NO-2NC (22)</td><td rowspan="2">(1)</td><td rowspan="2">NONC</td><td>NO</td><td></td><td>●</td><td>●</td><td></td><td rowspan="4">HW1R-2TP22③</td></tr>
<tr><td>NC</td><td>●</td><td></td><td></td><td rowspan="2">Operation Blocked</td></tr>
<tr><td rowspan="2">(3)</td><td rowspan="2">NONC</td><td>NO</td><td></td><td>●</td><td>●</td></tr>
<tr><td>NC</td><td>●</td><td></td><td></td><td></td></tr>
</table>

Sub-Assembled Ordering No.

Package Quantity: 1

Operator unit	Contact unit	
Part No. (Ordering No.) 	Contact Configuration (Code)	Part No. (Ordering No.) 
HW1R-2A③-PS	1NO-1NC (11)	HW-CNP11
	2NO (20)	HW-CNP20
	2NO-2NC (22N1)	HW-CNP22N1
HW1R-2D③-PS	2NO (20)	HW-CNP20
	2NO-2NC (22)	HW-CNP22
HW1R-2E③-PS	2NO-2NC (22)	HW-CNP22
HW1R-2F③-PS	2NO-2NC (22)	HW-CNP22
HW1R-2N③-PS	2NO-2NC (22N2)	HW-CNP22N2
HW1R-2T③-PS	2NO-2NC (22)	HW-CNP22

- On the contact arrangement marked with ★ in the table above, the rated load switching current is reduced to a half of the related current of the contact block.
  The rated insulation voltage and the rated thermal current remain unchanged.
- For models with ☆, contacts may overlap when the operator position is changed.
- When operating the pushbutton selector, do not turn the operator ring or the lock lever while the button is depressed. Otherwise the pushbutton selector may be damaged.
- For contact mounting position, see page 51.

For Part No. (Ordering No.)/ mounting positions of contact units, see page 51.

chanhvinh.com

Momoloever switches can be purchased only as a sub-assembled product.

Monolever Switches

Sub-Assembled

When ordering, specify the sub-assembled ordering no.

Assembled = Operator unit + Contact unit (Contact block, dummy block, connecting unit)






Sub-Assembled Ordering No.

Package Quantity: 1

Name / Shape	Positions	<Reference> Assembled Part No.	Operator unit: Name / Shape	Operator unit: Part No. (Ordering No.)	Contact unit: Shape	Contact unit: Contact Configuration	Contact unit: Part No. (Ordering No.)
HW1M Standard 	2-position	HW1M-P1010-20	HW1M Standard 	HW1M-P1010-PS		2NO (20)	HW-CNP20
		HW1M-P2020-20		HW1M-P2020-PS			
		HW1M-P0101-20		HW1M-P0101-PS			
		HW1M-P0202-20		HW1M-P0202-PS			
		HW1M-P0101-40		HW1M-P0101-PS		4NO (40)	HW-CNP40
		HW1M-P0202-40		HW1M-P0202-PS			
	4-position	HW1M-P1111-22N9		HW1M-P1111-PS		2NO-2NC (22)	HW-CNP22
		HW1M-P2222-22N9		HW1M-P2222-PS			
HW1M-L Interlocking 	2-position	HW1M-LP1010-20	HW1M-L Interlocking 	HW1M-LP1010-PS		2NO (20)	HW-CNP20
		HW1M-LP2020-20		HW1M-LP2020-PS			
		HW1M-LP0101-20		HW1M-LP0101-PS			
		HW1M-LP0202-20		HW1M-LP0202-PS			
		HW1M-LP0101-40		HW1M-LP0101-PS		4NO (40)	HW-CNP40
		HW1M-LP0202-40		HW1M-LP0202-PS			
	4-position	HW1M-LP1111-22N9		HW1M-LP1111-PS		2NO-2NC (22)	HW-CNP22
		HW1M-LP2222-22N9		HW1M-LP2222-PS			

- On all mono-lever switches, the rated current (load switching current) is reduced to a half of the rated current of the contact block. The rated insulation voltage and the rated thermal current remain unchanged.

- For contact mounting position, see page 51.

For Part No. (Ordering No.)/ mounting positions of contact units, see page 51.

Monolever Switches

Contact Configuration

2-position (Right/Left)

Contact Code	Contact Block			Lever Operator Position		
	Mounting Position	Contact		Left	Center	Right
20	(1)	NO		●		
	(3)	NO				●
40	(1)	2NO	NO	●		
			NO	●		
	(3)	2NO	NO			●
			NO			●

2-position (Up/Down)

Contact Code	Contact Block			Lever Operator Position		
	Mounting Position	Contact		Down	Center	Up
20	(1)	NO		●		
	(3)	NO				●
	(1)	2NO	NO	●		
			NO	●		
	(3)	2NO	NO			●
			NO			●

Contact Code	Contact Block				Lever Operator Position			
	Mounting Position	Contact		Down	Left	Center	Up	Right
22	(1)	NONC	NO		●			
			NC					●
	(3)	NONC	NO				●	
			NC	●				

Contact Block Mounting Position

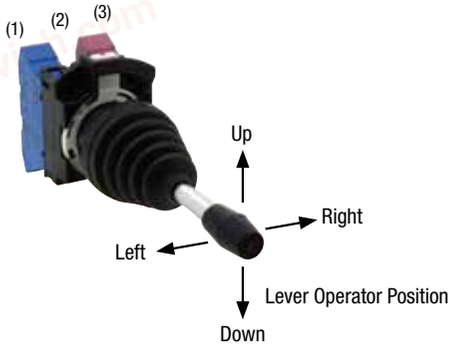

Note) (2) can only be mounted with a dummy block.

Note) The lever operator of the interlocking type HW1M-L is locked only in the center position. Pull on the interlocking lever before operating the lever up/down/right/left.

Monolever Switches Part No. Example

Assembled and sub-assembled unit

Assembled Part No. Example

HW1M-L P 1 0 1 0 - 20

Up Right Down Left

①Model
HW1M: Standard
HW1M-L: Interlocking

②Lever operation mode
Order of Entry
Up - Right - Down - Left
1: Maintained
2: Spring returned
0: Blocked

③Contact configuration code
Select a required contact operation at each lever operator position from the contact arrangement charts above and specify the Contact Code.

• For available assembled products, see table on page 41.

Operator unit

HW1M - L 1 0 1 0 - PS

Up Right Down Left

①Model
HW1M: Standard
HW1M-L: Interlocking

②Lever operation mode
Order of Entry
Up - Right - Down - Left
1: Maintained
2: Spring returned
0: Blocked

Contact unit

HW- CN P 10 20

③Contact configuration code
Select a required contact operation at each lever operator position from the contact arrangement charts above and specify the Contact Code.

Dimensions

All dimensions in mm.

Standard

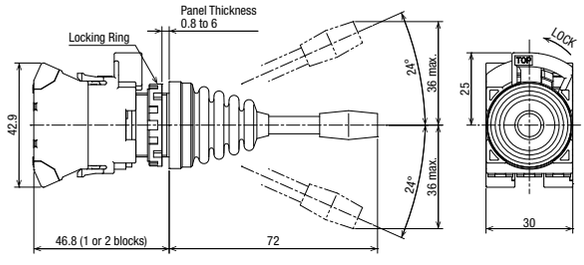

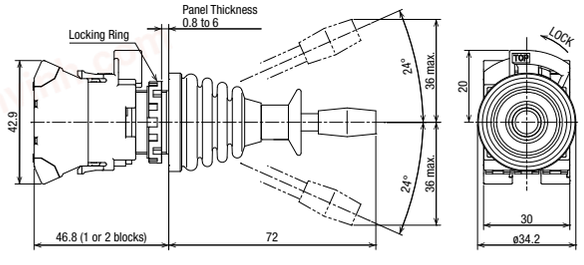

Interlocking

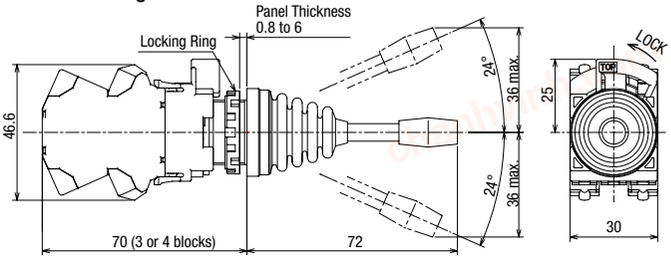

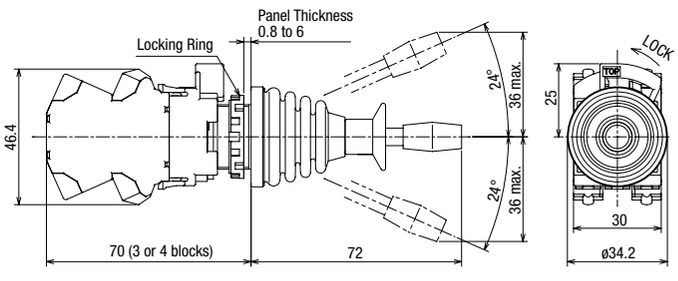

chanhvinh.com

Short Body Pilot Lights

Assembled



Package Quantity: 1

Name / Shape	Operating Voltage	Part No. (Ordering No.)	① Lens Color Code
Extended (Dome) HW1P 	6V AC/DC	HW1P-2JPQ2①	**R** (red) **G** (green) **Y** (yellow) **A** (amber) **S** (blue) **PW** (Pure white)
	12V AC/DC	HW1P-2JPQ3①	
	24V AC/DC	HW1P-2JPQ4①	
	100/120V AC/DC	HW1P-2JPRH2①	
	200/240V AC/DC	HW1P-2JPCM2①	
Square Flush HW2P 	6V AC/DC	HW2P-1JPQ2①	**R** (red) **G** (green) **Y** (yellow) **A** (amber) **S** (blue) **PW** (Pure white)
	12V AC/DC	HW2P-1JPQ3①	
	24V AC/DC	HW2P-1JPQ4①	
	100/120V AC/DC	HW2P-1JPRH2①	
	200/240V AC/DC	HW2P-1JPCM2①	

- Built-in BA9S base LED lamp. See page 57 for LED Lamps.
- For square flush pilot lights, legends and symbols can be engraved on marking plates, or printed film can be inserted. For details on marking plates or film, see page 63. Engraving and films must be prepared by the customer.
- Specify a lens color code in place of ① in the Part No.

Short Body Pilot Lights

Dimensions

All dimensions in mm.

Extended (Dome)

6V, 12V, 24V AC/DC

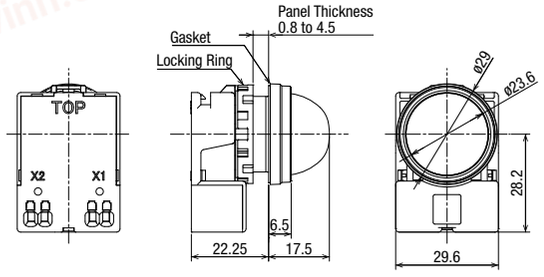

100/120V AC/DC, 200/240V AC

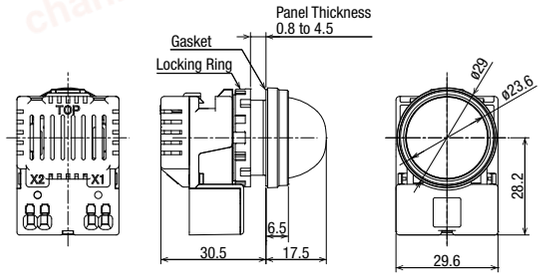

Square Flush

6V, 12V, 24V AC/DC

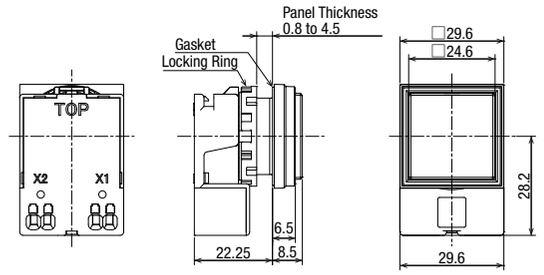

100/120V AC/DC, 200/240V AC

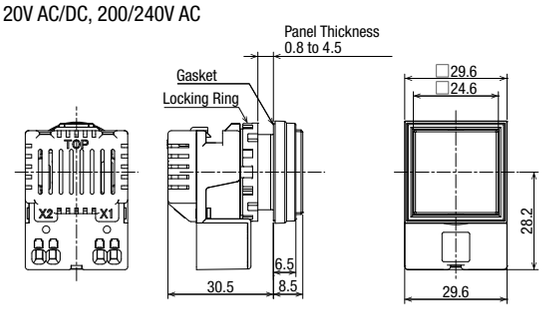

Illuminated / Non-Illuminated Buzzers

Easy installation of buzzers and lamps

- Short, 19.7 mm depth behind panel.
- Buzzer and lamp functions are integrated. (Illuminated buzzers)
- IP65 waterproof from the front of the panel
- Installing an optional terminal rubber boot upgrades the terminal's waterproof characteristics to IP54 without the need to use a rear enclosure.



- See website for details on approvals and standards.

Name / Shape	Part No. (Ordering No.)	Illumination Color	Sound Type	Package Quantity	Dimensions (All dimensions in mm.)
Illuminated Buzzer 	HW1Z-P1F2PQ4R	Red	Intermittent	1	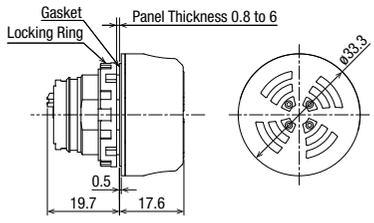
	HW1Z-P1F2PQ4Y	Yellow			
Non-Illuminated Buzzer 	HW1Z-2PQ4B	—	Steady	1	
	HW1Z-F2PQ4B	—	Intermittent		

- See page 54 for details on terminal rubber boot.

Specifications and Ratings

Rated Insulation Voltage		30V
Rated Voltage		12 to 24V DC
Voltage Range		10.8 to 26.4V DC
Rated Current (effective value)		Illuminated: 18mA (24V DC), 8mA (12V DC) Non-Illuminated (Steady sound): 9mA (24V DC), 4mA (12V DC) (Intermittent sound): 7mA (24V DC), 3mA (12V DC)
Inrush Current		100mA maximum
Buzzer	Sound Pressure (of HW1Z itself) (at 25ºC)	90dB min. at 0.1m (24VDC) 70dB min. at 1m (24V DC, equivalent value)
		84dB min. at 0.1m (12V DC) 64dB min. at 1m (12VDC, equivalent value)
	Sound Frequency (at 25ºC)	2,200 to 2,450Hz
	Sound Type	Illuminated: Intermittent Non-Illuminated: Steady/Intermittent
	Intermittent Cycle (at 25ºC)	105 cycles/minute approx. (1.75Hz approx.)
Illumination	Illumination Type	Flashing
	Flash Cycle (at 25ºC)	105 cycles/minute approx. (1.75Hz approx.)
Operating Temperature		–20 to +50°C (no freezing)
Operating Humidity		20 to 85% RH (no condensation)
Storage Temperature		–30 to +80°C (no freezing)
Insulation Resistance		100 MΩ minimum (500V DC megger)
Dielectric Strength		Between live and earthed metal parts: 1000 AC, 1 minute
Vibration Resistance		Damage limits: 5 to 55Hz, amplitude 0.5 mm Operating extremes: 5 to 55Hz, amplitude 0.5 mm
Shock Resistance		Operating extremes: 100 m/s^2
		Damage limits: 1,000 m/s^2
Degree of Protection	Panel front	IP65 (IEC60529)
	Terminal	IP40 (IEC 60529) IP54 (with terminal rubber boot) (IEC 60529)
Terminal Style		Push-in terminal
Applicable Wire		Solid wire/ferrule (without insulation cover): 0.2 to 1.5 mm^2, AWG24-16 Ferrule (with insulation cover): 0.2 to 0.75 mm^2, AWG24-18
Weight (approx.)		17g

Dimensions

All dimensions in mm.

With terminal rubber boot

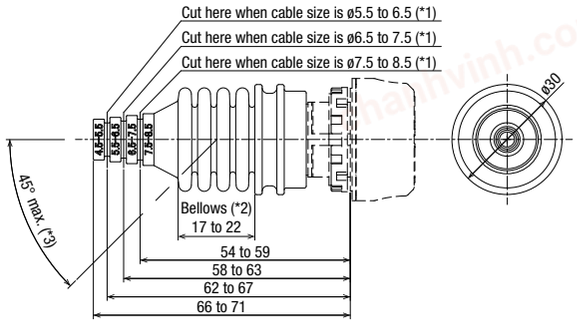

*1: ø4.5-5.5 cable needs no cutting.
*2: The bellows must be 17 to 22mm long after installing the terminal rubber boot.
*3: Maintain a cable angle of 45° max. to the HW1Z axis.

Terminal Arrangement (botom view)

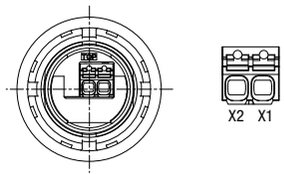

X1 and X2 have no polarity.

Mounting Hole Layout

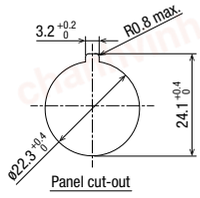

3.2 +0.2 0 hole is for anti-rotation.
Not required when nameplate/anti-rotation is not used.

Instructions for Illuminated / Non-illuminated buzzers: see page 66

chanhvinh.com

Emergency Stop Switches

Emergency Stop Switches

- Direct opening action (IEC 60947-5-5; 5.2, IEC 60947-5-1; Annex K)
- Safety lock mechanism (IEC 60947-5-5; 6.2)
- Degree of Protection IP65 (IEC 60529)

c UL us LISTED

- See website for details on approvals and standards.



Specifications

Operating Temperature		–25 to +60°C (no freezing)
Operating Humidity		45 to 85% RH (no condensation)
Storage Temperature		–40 to +80°C (no freezing)
Minimum Force Required for Direct Opening Action		80N
Minimum Operator Stroke Required for Direct Opening Action		5.5mm
Maximum Operator Stroke		10.0mm
Contact Resistance		50 mΩ maximum (initial value)
Insulation Resistance		100 MΩ minimum (500V DC megger)
Dielectric Strength		Between live and dead parts: 2500V AC, 1 minute Between terminals of different poles: 2500V AC, 1 minute Bet ween terminals of the same poles: 2500V AC, 1 minute
Vibration Resistance	Damage limits	10 to 500 Hz, Amplitude 0.35 mm, Acceleration 50m/s²
	Operating extremes	10 to 500 Hz, Amplitude 0.35 mm, Acceleration 50m/s²
Shock Resistance		Damage limits: 1,000 m/s2
		Operating extremes: 150 m/s2
Operation Frequency		900 operations/hour
Life	Mechanical	Single contact block: 100,000 operations minimum Double contact block: 50,000 operations minimum
	Electrical	Single contact block: 100,000 operations minimum Double contact block: 50,000 operations minimum (at 900 operations/h, duty ratio 40%)
Degree of Protection		IP65 (IEC 60529), UL Type 4X
Short-circuit Protection		250V/10A fuse (Type aM IEC 60269-1/IEC 60269-2)
Weight (approx.)		51g (HW1B-V4P02) 67g (HW1B-V4P04) 48g (HW1B-Y2P02)

Mounting Hole Layout

All dimensions in mm.

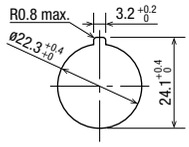

Minimum Mounting Centers for HW1B (emergency stop switch)

	Vertical Spacing	Horizontal Spacing
HW1B-V3 HW1B-V4 HW1B-Y2	50 mm minimum	50 mm minimum
HW1B-V5	60 mm minimum	60 mm minimum

- The minimum mounting centers of HW1B (pushbuttons) and each HW series emergency stop switches are shown. For other button shapes, refer to the dimensions and take wiring and operation of switches into consideration.

Nameplate (for ø22 mm Emergency Stop Switches)

Package Quantity: 1

Shape	Legend	Part No.	Ordering No.	Remarks
	(blank)	**HWAV-0-Y**	HWAV-0-Y	**HWAV-27-Y** Nameplate color: yellow Legend color: black Panel thickness: 0.8 to 4.5 mm Material: Polyamide 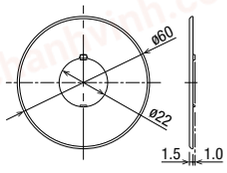 Note) Cannot be used on ø60 mushroom pushlock turn reset switches. Use a nameplate exclusive for ø60 mushroom e-stop. See XW series catalog.
	EMERGENCY STOP	**HWAV-27-Y**	HWAV-27-Y	

- "EMERGENCY OFF" and white (blank) nameplates available. See website or catalog for SEMI Emergency off (EMO) switches and Stop switches.

Note) For machinery subject to ISO/IEC standards such as machine tools and food machinery, in compliant with the revised ISO13850, it is not recommended to display texts or symbols such as EMERGENCY STOP on the actuator or nameplate of an emergency stop device.

chanhvinh.com

Emergency Stop Switches

Assembled



Package Quantity: 1

Name / Shape	Contact Configuration	Part No. (Ordering No.)
ø29mm Mushroom Pushlock Turn Reset HW1B-V3 	1NC	HW1B-V3P01R
	1NO-1NC	HW1B-V3P11R
	2NC	HW1B-V3P02R
	3NC	HW1B-V3P03N2R
	1NO-1NC	HW1B-V3P22R
	4NC	HW1B-V3P04R

Package Quantity: 1

Name / Shape	Contact Configuration	Part No. (Ordering No.)
ø40mm Mushroom Pushlock Turn Reset HW1B-V4 	1NC	HW1B-V4P01R
	1NO-1NC	HW1B-V4P11R
	2NC	HW1B-V4P02R
	3NC	HW1B-V4P03N2R
	1NO-1NC	HW1B-V4P22R
	4NC	HW1B-V4P04R

- Pushlock turn reset – Button is maintained when pressed and is reset when turned clockwise.
- Emergency stop switches with 1 contact block contain 2 dummy blocks. Pushbuttons with 2 contact block contains 1 dummy block.

• For other specifications, select from sub-assembled units (page 48).

Part No. Example

Assembled and sub-assembled unit

Assembled Part No. Example

HW1B-V 4 P 11 R

①Operation code
- **V**: Pushlock Turn Reset
- **Y**: Push Pull

②Button style code
- **3**: ø29mm Mushroom (pushlock turn reset)
- **4**: ø40mm Mushroom (pushlock turn reset)
- **5**: ø60mm Mushroom (pushlock turn reset)
- **2**: ø40mm Mushroom (push pull)

③Contact configuration code
- **01**: 1NC
- **11**: 1NO-1NC
- **02**: 2NC
- **12N1**: 1NO-2NC
- **03N2**: 3NO
- **22**: 2NO-2NC
- **04**: 4NC

④Button color code

- For available assembled products, see table above.

Sub-assembled operator unit

HW1B - V 3 R - PS

①Operation code
- **V**: Pushlock Turn Reset
- **Y**: Push Pull

②Button style code
- **3**: ø29mm Mushroom (pushlock turn reset)
- **4**: ø40mm Mushroom (pushlock turn reset)
- **5**: ø60mm Mushroom (pushlock turn reset)
- **2**: ø40mm Mushroom (push pull)

③Button color code (see page 48)

Note) Only up to 2 contacts can be used for push-pull switches

Sub-assembled contact unit

HW- CN P 10

③Contact configuration code
- **01**: 1NC
- **11**: 1NO-1NC
- **02**: 2NC
- **12N1**: 1NO-2NC
- **03N2**: 3NO
- **22**: 2NO-2NC
- **04**: 4NC

Note) When choosing sub-assembled push-pull operators, only up to 2 contacts can be used.

Note
- For emergency stop purposes, these switches must contain at least one NC contact block.

Emergency Stop Switches

Sub-Assembled

When ordering, specify the sub-assembled ordering no. See page 47 for available assembled products.

Assembled = Operator unit + Contact unit (Contact block, dummy block, connecting unit)






Pushlock Turn Reset

Name / Shape	Contact Configuration	<Reference> Assembled Part No.	④ Button Color Code
ø29mm Mushroom HW1B-V3 	1NC	HW1B-V3P01④	R (red) Y (yellow)
	1NO-1NC	HW1B-V3P11④	
	2NC	HW1B-V3P02④	
	1NO-2NC	HW1B-V3P12N1④	
	3NC	HW1B-V3P03N2④	
	2NO-2NC	HW1B-V3P22④	
	4NC	HW1B-V3P04④	
ø40mm Mushroom HW1B-V4 	1NC	HW1B-V4P01④	R (red) Y (yellow)
	1NO-1NC	HW1B-V4P11④	
	2NC	HW1B-V4P02④	
	1NO-2NC	HW1B-V4P12N1④	
	3NC	HW1B-V4P03N2④	
	2NO-2NC	HW1B-V4P22④	
	4NC	HW1B-V4P04④	
ø60mm Mushroom HW1B-V5 	1NC	HW1B-V5P01④	R (red) Y (yellow)
	1NO-1NC	HW1B-V5P11④	
	2NC	HW1B-V5P02④	
	1NO-2NC	HW1B-V5P12N④	
	3NC	HW1B-V5P03N2④	
	2NO-2NC	HW1B-V5P22④	
	4NC	HW1B-V5P04④	

- Pushlock turn reset – Button is maintained when pressed and is reset when turned clockwise.

Sub-assembled Ordering No.
Pushlock Turn Reset

Package Quantity: 1

Operator Unit		Contact Unit		
Name / Shape	Part No. (Ordering No.)	Shape	Contact Configuration	Part No. (Ordering No.)
ø29mm Mushroom 	HW1B-V3④-PS		1NC	HW-CNP01
			1NO-1NC	HW-CNP11
			2NC	HW-CNP02
			1NO-2NC	HW-CNP12N1
			3NC	HW-CNP03N2
			2NO-2NC	HW-CNP22
			4NC	HW-CNP04
ø40mm Mushroom 	HW1B-V4④-PS		1NC	HW-CNP01
			1NO-1NC	HW-CNP11
			2NC	HW-CNP02
			1NO-2NC	HW-CNP12N1
			3NC	HW-CNP03N2
			2NO-2NC	HW-CNP22
			4NC	HW-CNP04
ø60mm Mushroom 	HW1B-V5④-PS		1NC	HW-CNP01
			1NO-1NC	HW-CNP11
			2NC	HW-CNP02
			1NO-2NC	HW-CNP12N1
			3NC	HW-CNP03N2
			2NO-2NC	HW-CNP22
			4NC	HW-CNP04

- Specify a button color code in place of ④ in the Part No. R (red), Y (yellow)
  Note) Y (yellow) cannot be used as a emergency stop switch by EN standards.

Push Pull

Name / Shape	Contact Configuration	<Reference> Assembled Part No.	④ Button Color Code
ø40mm Mushroom HW1B-Y2 	1NC	HW1B-Y2P01④	R (red) Y (yellow)
	1NO-1NC	HW1B-Y2P11④	
	2NC	HW1B-Y2P02④	

- Push-Pull – 2-position switches with button maintained in both depressed and reset positions.

Push Pull

Package Quantity: 1

Operator Unit		Contact Unit		
Name / Shape	Part No. (Ordering No.)	Shape	Contact Configuration	Part No. (Ordering No.)
ø40mm Mushroom 	HW1B-Y2④-PS		1NC	HW-CNP01
			1NO-1NC	HW-CNP11
			2NC	HW-CNP02

- Specify a button color code in place of ④ in the Part No. R (red), Y (yellow)
  Note) Y (yellow) cannot be used as a emergency stop switch by EN standards.

Note) Only up to 2 contacts can be used for push-pull switches.

For Part No. (Ordering No.)/ mounting positions of contact units, see page 51.

Emergency Stop Switches Dimensions

All dimensions in mm.

Dimensions

All dimensions in mm.

ø29mm Mushroom Pushlock Turn Reset
HW1B-V3

1 to 2 contacts

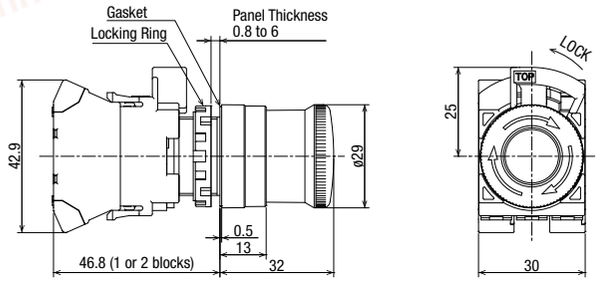

3 to 4 contacts

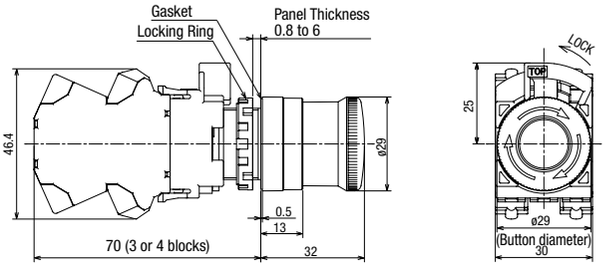

ø29mm Mushroom Pushlock Turn Reset
HW1B-V4

1 to 2 contacts

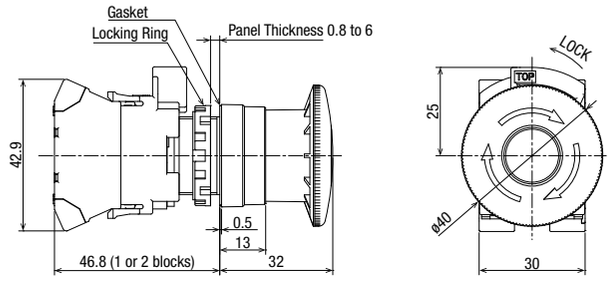

3 to 4 contacts

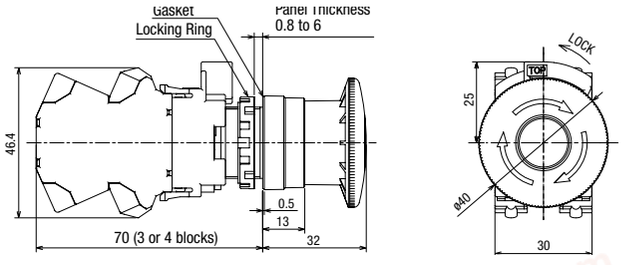

ø60mm Mushroom Pushlock Turn Reset
HW1B-V5

1 to 2 contacts

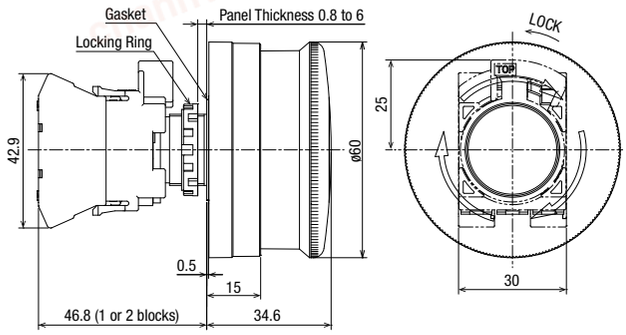

3 to 4 contacts

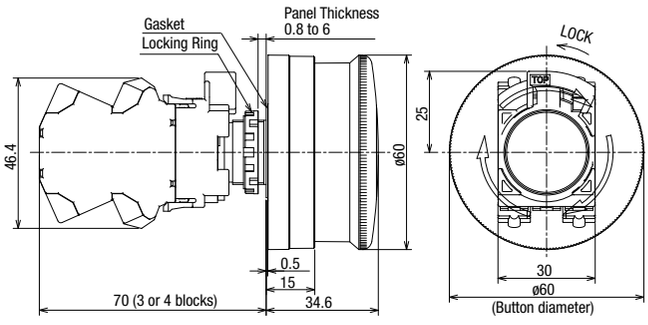

ø40mm Mushroom Push Pull (2-position)
HW1B-Y2

1 to 2 contacts

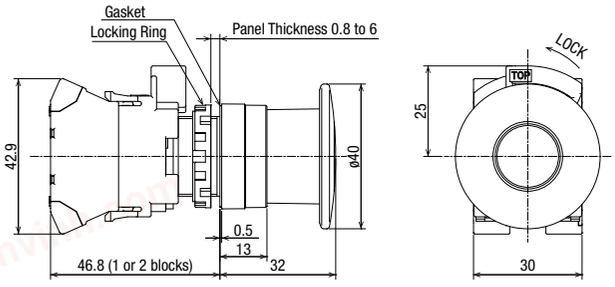

chanhvinh.com

Nameplates

All dimensions in mm

When ordering, specify the Ordering No.

Description	Legend	Material	Part No.	Ordering No.	Package Quantity	Dimensions (mm)
HWAM	Order marking plate (round) separately.	Plastic (black)	**HWAM**	HWAM	1	HWNP-☐ marking plate (sold separately) is necessary. 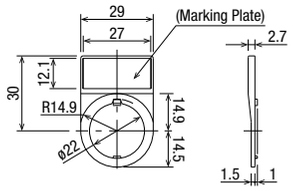
				HWAMPN10	10	
HWAQ	Order marking plate (square) separately.	Plastic (black)	**HWAQ**	HWAQ	1	HWNP-☐ marking plate (sold separately) is necessary. 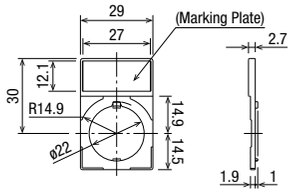
				HWAQPN10	10	
HWAS	Blank	Plastic (black)	**HWAS-0**	HWAS-0	1	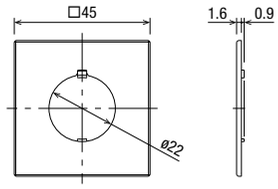
				HWAS-0PN10	10	

• Nameplates cannot be used on HW series control stations (HW1X).

Marking Plates for HWAM/HWAQ

When ordering, specify the Ordering No.

Description	Material	Part No.	Ordering No.	Package Quantity	Dimensions (mm)
HWNP	Aluminum (black) Thickness = 1.0mm	**HWNP-☐**	HWNP-☐	1	White legend on black background. Engraving area: W25×H7 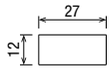
			HWNP-☐PN10	10	

• Specify a legend code in place of ☐ in the Ordering No.

Legends

Code	Legend
0	(blank)
1	ON
2	OFF
3	START
4	STOP
31	OFF-ON
35	HAND-AUTO
53	HAND-OFF-AUTO

• See page 63 for how to install nameplates/marking plates, and how to remove marking plates.

chanhvinh.com

Contact Unit

Contact Unit Part No. / Contact Configuration

Package Quantity: 1

Shape / Contact Block Mounting Position

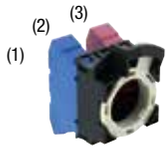

1 to 2 contacts

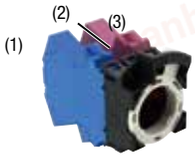

3 to 4 contacts

Note) (2) can only be mounted with a dummy block.

Contact Configuration (Code)	Part No. (Ordering No.)	Mounting Position	Contact
1NO (10)	HW-CNP10	(1)	1NO
		(2)	Dummy
		(3)	Dummy
1NC (01)	HW-CNP01	(1)	Dummy
		(2)	Dummy
		(3)	1NC
1NO-1NC (11)	HW-CNP11	(1)	1NO
		(2)	Dummy
		(3)	1NC
1NO-1NC (11N1)	HW-CNP11N1	(1)	1NC
		(2)	Dummy
		(3)	1NO
2NO (20)	HW-CNP20	(1)	1NO
		(2)	Dummy
		(3)	1NO
2NC (02)	HW-CNP02	(1)	1NC
		(2)	Dummy
		(3)	1NC
2NO-2NC (22)	HW-CNP22	(1)	1NO-1NC
		(2)	Dummy
		(3)	1NO-1NC
2NO-2NC (22N1)	HW-CNP22N1	(1)	2NO
		(2)	Dummy
		(3)	2NC
2NO-2NC (22N2)	HW-CNP22N2	(1)	2NC
		(2)	Dummy
		(3)	2NO

Contact Configuration (Code)	Part No. (Ordering No.)	Mounting Position	Contact
3NO (30N1)	HW-CNP30N1	(1)	2NO
		(2)	Dummy
		(3)	1NO
3NC (03N2)	HW-CNP03N2	(1)	2NC
		(2)	Dummy
		(3)	1NC
1NO-2NC (12N1)	HW-CNP12N1	(1)	1NO-1NC
		(2)	Dummy
		(3)	1NC
1NO-3NC (13)	HW-CNP13	(1)	1NO-1NC
		(2)	Dummy
		(3)	2NC
2NO-1NC (21N3)	HW-CNP21N3	(1)	1NO-1NC
		(2)	Dummy
		(3)	1NO
3NO-1NC (31)	HW-CNP31	(1)	2NO
		(2)	Dummy
		(3)	1NO-1NC
1NO-3NC (13)	HW-CNP13	(1)	1NO-1NC
		(2)	Dummy
		(3)	2NC
4NO (40)	HW-CNP40	(1)	2NO
		(2)	Dummy
		(3)	2NO
4NC (04)	HW-CNP04	(1)	2NC
		(2)	Dummy
		(3)	2NC

- Contact unit includes a contact block, connecting unit.
- Switches with 1 contact block contain 2 dummy blocks. Switches with 2 contact blocks contain 1 dummy block.

Contact Unit

Contact Unit (illuminated) Part No. / Contact Configuration

Package Quantity: 1

Shape / Contact Block Mounting Position

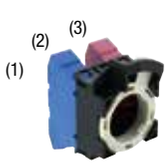

1 to 2 contacts

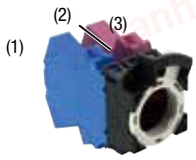

3 to 4 contacts

Note) (2) can only be mounted with a dummy block.

Contact Configuration (Code)	Part No. (Ordering No.)	Mounting Position	Contact
1NO (10)	HW-CNP10Q0	(1)	1NO
		(2)	Full voltage adapter
		(3)	Dummy
1NC (01)	HW-CNP01Q0	(1)	Dummy
		(2)	Full voltage adapter
		(3)	1NC
1NO-1NC (11)	HW-CNP11Q0	(1)	1NO
		(2)	Full voltage adapter
		(3)	1NC
1NO-1NC (11N1)	HW-CNP11N1Q0	(1)	1NC
		(2)	Full voltage adapter
		(3)	1NO
2NO (20)	HW-CNP20Q0	(1)	1NO
		(2)	Full voltage adapter
		(3)	1NO
2NC (02)	HW-CNP02Q0	(1)	1NC
		(2)	Full voltage adapter
		(3)	1NC
2NO-2NC (22)	HW-CNP22Q0	(1)	1NO-1NC
		(2)	Full voltage adapter
		(3)	1NO-1NC
2NO-2NC (22N1)	HW-CNP22N1Q0	(1)	2NO
		(2)	Full voltage adapter
		(3)	2NC
2NO-2NC (22N2)	HW-CNP22N2Q0	(1)	2NC
		(2)	Full voltage adapter
		(3)	2NO

Contact Configuration (Code)	Part No. (Ordering No.)	Mounting Position	Contact
3NO (30N1)	HW-CNP30N1Q0	(1)	2NO
		(2)	Full voltage adapter
		(3)	1NO
3NC (03N2)	HW-CNP03N2Q0	(1)	2NC
		(2)	Full voltage adapter
		(3)	1NC
1NO-2NC (12N1)	HW-CNP12N1Q0	(1)	1NO-1NC
		(2)	Full voltage adapter
		(3)	1NC
1NO-3NC (13)	HW-CNP13Q0	(1)	1NO-1NC
		(2)	Full voltage adapter
		(3)	2NC
2NO-1NC (21N3)	HW-CNP21N3Q0	(1)	1NO-1NC
		(2)	Full voltage adapter
		(3)	1NO
3NO-1NC (31)	HW-CNP31Q0	(1)	1NO
		(2)	Full voltage adapter
		(3)	1NO-1NC
1NO-3NC (13)	HW-CNP13Q0	(1)	1NO-1NC
		(2)	Full voltage adapter
		(3)	2NC
4NO (40)	HW-CNP40Q0	(1)	2NO
		(2)	Full voltage adapter
		(3)	2NO
4NC (04)	HW-CNP04Q0	(1)	2NC
		(2)	Full voltage adapter
		(3)	2NC

- Contact unit (illuminated) includes a contact block, full voltage adapter, and connecting unit.
- Switches with 1 contact block contain 2 dummy blocks. Switches with 2 contact blocks contain 1 dummy block.

Note) LED lamp is not installed. When ordering a contact unit (illuminated), select a LED lamp from below.

LED lamp (package quantity:1)



Rated Voltage	Part No. (Ordering No.)
6V AC/DC	LSRD-6
12V AC/DC	LSRD-1
24V AC/DC	LSRD-2
100/120V AC/DC	LSRD-H2
200/220V AC	LSRD-M2
230/240V AC	LSRD-M4

Accessories

All dimensions in mm

When ordering, specify the Ordering No.

Name / Shape		Material	Part No.	Ordering No.	Package Quantity	Remarks
Tool	Locking Ring Wrench 	Metal (nickel-plated brass) Weight: approx. 150g	MW9Z-T1	MW9Z-T1	1	• Used to tighten the locking ring when installing the HW switch onto a panel. 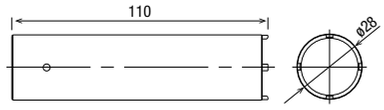
Tool	Lamp Holder Tool 	Nitrile rubber (black)	OR-55	OR-55	1	• Used to install and remove the LED lamps. See page 60 for how to install. Ⓐ : BA9S 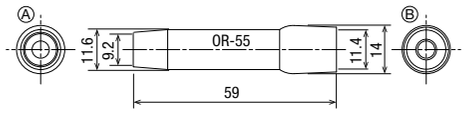
Anti-rotation Ring 		Ring: polyamide Gasket: nitril rubber	HW9Z-RL	HW9Z-RLPN10	10	• Used to prevent the operator from turning. Generally used when using no nameplates on selector switches and pushbutton selectors. 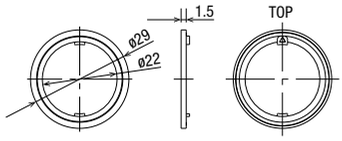
Rubber Mounting Hole Plug 		Nitril rubber (black)	OB-31	OB-31PN05	5	• Degree of protection: IP65 (round hole), IP40 (with anti-rotation function) 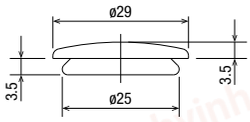
Mounting Hole Plug 		Plug: Metal (Zinc diecast) Locking nut: Polyamide Gasket: Nitrile rubber	LW9Z-BM	LW9Z-BM	1	• Degree of protection: IP66 (round hole), IP40 (with anti-rotation function) • Tightening torque: 1.2 N·m 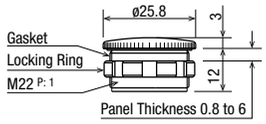
Mounting Hole Plug 		Polyamide	LW9Z-BP1	LW9Z-BP1	1	• Degree of protection: IP65 • Tightening torque: 2.0 N·m 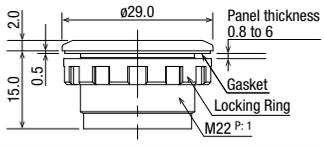
Switch Guard 	Spring Return	Guard: Polyacetal Cover: polyarylate Gasket: Nitrile rubber	HW9Z-K1	HW9Z-K1	1	• Used to prevent inadvertent operation for flush pushbuttons. Degree of protection: IP65 • Maintained type stops at 90° and 180°. 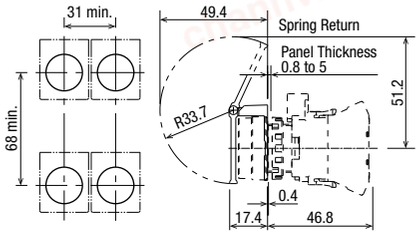
	Maintained		HW9Z-K11	HW9Z-K11	1	
Button Clear Boot	For flush pushbuttons	Rubber (EPDM)	OC-31	OC-31	1	• Used to cover and protect pushbuttons where units are subject to watersplash. Not suitable for outdoor use or where the units are subject to oil splash. • Cannot be used with nameplates HWAM, HWAQ, HWAS, or HWAV. 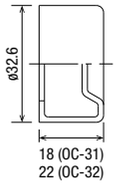
	For extended pushbuttons		OC-32	OC-32	1	

Accessories

All dimensions in mm

When ordering, specify the Ordering No.

Name / Shape	Material	Part No.	Ordering No.	Package Quantity	Remarks
Padlock Cover 	Polyarylate Gasket: Nitrile rubber	**HW9Z-KL1**	HW9Z-KL1	1	• Used to protect pushbuttons, selector switches, and key selector switches. 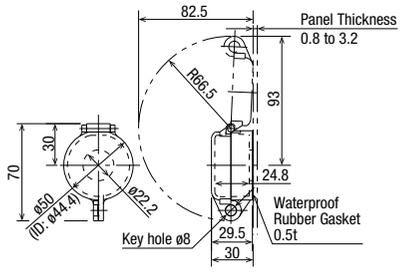
Rubber Boot for Dual Pushbutton Switches 	Clear Silicon Rubber	**HW9Z-D7D**	HW9Z-D7D	1	• IP65 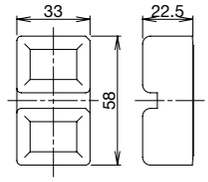
Ring Adapter 	Nitryl rubber	**HW9Z-A25**	HW9Z-A25PN05	5	• Used to install the HW series units into ø25 mm mounting holes. Degree of protection: IP65 • Cannot be used with anti-rotation and nameplate. • Mounting panel thickness: 1.2 to 6.0 mm • See page 62 for details.
Ring Adapter 	Gasket: polyamide Washer: metal (brass)	**HW9Z-A30**	HW9Z-A30PN02	2	• Used to install the HW series units (round type) into ø30 mm mounting holes (except HW1P-5, HW1E, HW1B-M5/V5, HW7D). Degree of protection: IP65 • Cannot be used with anti-rotation ring and nameplate. Cannot be used on full shroud illuminated pushbuttons, selector pushbuttons, and mono-lever switches. • Mounting panel thickness: 1.6 to 4.0 mm
For Illuminated Buzzer Terminal Rubber Boot 	Nitrile rubber	**HW9Z-CZ1**	HW9Z-CZ1	1	• Applicable cable: ø4.5 to 8.5 mm • Cut the end of rubber boot to fit the cable size (see dimensions on page 66). • Weight: 10 g (approx.)

chanhvinh.com

Accessories

All dimensions in mm

When ordering, specify the Ordering No.

Name / Shape	Material	Part No.	Ordering No.	Package Quantity	Remarks	
Contact Block 	NO contact Housing color: blue	**HW-P10**	HW-P10	5	Terminal no.: 1st deck 3-4	Note) Switches with 1 contact block contain 2 dummy blocks. Switches with 2 contact blocks contain 1 dummy block.
	NC contact Housing color: reddish purple	**HW-P01**	HW-P01	5	Terminal no.: 1st deck: 1-2	
	2NO contact Housing color: blue	**HW-PW20**	HW-PW20	5	Terminal no.: 1 deck: 13-14 2 deck: 23-24	
	2NC contact Housing color: reddish purple	**HW-PW02**	HW-PW02	5	Terminal no.: 1 deck: 11-12 2 deck: 21-22	
	NONC contact Housing color: blue / reddish purple	**HW-PW11**	HW-PW11	5	Terminal no.: 1 deck: 13-14 2 deck: 21-22	
Full voltage adapter 		**HW-CNP**	HW-CNP	1	Connecting unit for Push-in terminal	
Connecting unit 	Weight: approx. 9g	**HW-CNP**	HW-CNP	1	Connecting unit for Push-in terminal	
Dummy Block 	Polyamide (black)	**CW-DB**	CW-DBPN05	5	Note) Switches with 1 contact block contain 2 dummy blocks. Switches with 2 contact blocks contain 1 dummy block.	

chanhvinh.com

Maintenance Parts

All dimensions in mm

When ordering, specify the Ordering No.

Name / Shape		Material/Dimensions	Part No.	Ordering No.	Package Quantity	Color Code ∗
Lens 	①Round flush	Polyarylate ø23.5 H4.2	HW9Z-L11∗	HW9Z-L11∗-KPN05	5	R (red), G (green), Y (yellow), A (amber), C (clear), S (blue)
	②Square flush	Polyarylate ø24.6 H4	HW9Z-L21∗	HW9Z-L21∗-KPN05	5	
	③Round extended	Polyarylate ø23.3 H10	HW9Z-L12∗	HW9Z-L12∗-KPN05	5	
	④ø29 mushroom	AS, marking type ø29 H12.7	ALW31LD-∗	ALW31LD-∗-KPN02	2	
	⑤ø40 mushroom	AS, marking type ø40 H12.7	ALW41LD-∗	ALW41LD-∗-K	1	
	⑥Dome for pilot light	AS ø23.5 H15.1	HW1A-P2∗	HW1A-P2∗PN05-K	5	R (red), G (green), Y (yellow), A (amber), W (white), S (blue)
Button 	①Round flush with round or square bezel	Polyacetal ø23.6 H3	HW1A-B1∗	HW1A-B1∗PN05	5	• Use ① for Selector pushbuttons B (black), G (green), R (red), Y (yellow), S (blue), W (white)
	②Round extended with round or square bezel	Polyacetal ø23.6 H9.2	HW1A-B2∗	HW1A-B2∗PN05	5	
	③Square flush	Polyacetal □24.8 H3	HW2A-B1∗	HW2A-B1∗PN05	5	
	④Square extended	Polyacetal □24.5 H9.2	HW2A-B2∗	HW2A-B2∗PN05	5	
	⑤ø29 mushroom	Polyacetal ø29 H12.7 (M18P1.0)	HW1A-B3∗	HW1A-B3∗PN02	2	
	⑥ø40 mushroom	Polyacetal ø40 H12.7 (M18P1.0)	HW1A-B4∗	HW1A-B4∗PN02	2	
Marking Plate: Round flush		Acrylic ø21.5 Thickness = 1	HW9Z-P11	HW9Z-P11PN05	5	• White • See page 63 for dimensions and engraving area.
Marking Plate: Round extended 		Acrylic ø21.3 Thickness = 6.5	HW9Z-P12	HW9Z-P12PN05	5	
Marking Plate: Square flush		Acrylic 22.7 Thickness = 1	HW9Z-P21	HW9Z-P21PN05	5	
Marking Plate: ø29/40 mm mushroom		Acrylic ø15.7 H3.4	ALW3B	ALW3BPN05	5	
Operator Knob for Illuminated Selector Switch 		AS resin	HW9Z-FDY∗	HW9Z-FDY∗-K	1	R (red), G (green), Y (yellow), A (amber), W (white), S (blue)
Operator Lever for Illuminated Selector Switch 			HW9Z-FDL∗	HW9Z-FDL∗-K	1	
Spare Key (Disc Tumber Key) 		Metal (nickel-plated brass)	HW9Z-SK-231	HW9Z-SK-231PN02	2	

chanhvinh.com

Maintenance Parts

All dimensions in mm

When ordering, specify the Ordering No.

Name / Shape		Material/Dimensions	Part No.	Ordering No.	Package Quantity	Remarks
Spare Key (Pin Tumber Key) 		Metal (nickel-plated brass)	LW9Z-SK-500	LW9Z-SK-500PN02	2	• Standard key number
			LW9Z-SK-□	LW9Z-SK-□PN02		• Key number □: 501 to 515
Lockig Ring 		Polyamide (black) ø28.4 H5 M22P1	HW9Z-LN	HW9Z-LNPN05	5	
Cap for Mono-lever Switch 	Standard	Nitryl rubber ø10 L20	HW9Z-CPM	HW9Z-CPM	1	
Boot for Mono-lever Switch 	Standard	Nitryl rubber ø29.2 L34.4	HW9Z-BLM	HW9Z-BLM	1	
Gasket 		Nitryl rubber (black)	HW9Z-WM	HW9Z-WMPN10	10	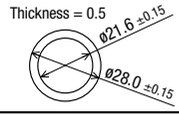

HW Series LED Lamps

When ordering, specify the Ordering No.

Shape/Dimensions	Operating Voltage	Current Draw DC	Current Draw AC	Part No.	Ordering No.	Package Quantity	Base
 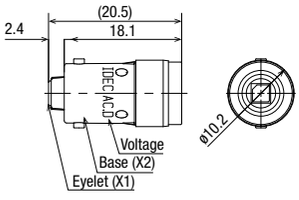	6V AC/DC	10mA	14mA	LSRD-6	LSRD-6	1	BA9S/13
					LSRD-6PN10	10	
	12V AC/DC	7mA	8mA	LSRD-1	LSRD-1	1	
					LSRD-1PN10	10	
	24V AC/DC	7mA	8mA	LSRD-2	LSRD-2	1	
					LSRD-2PN10	10	
	100/120V AC/DC	2mA	2mA	LSRD-H2	LSRD-H2	1	
					LSRD-H2PN10	10	
	200/220V AC	2mA	2mA	LSRD-M2	LSRD-M2	1	
					LSRD-M2PN10	10	
	230/240V AC	2mA	2mA	LSRD-M4	LSRD-M4	1	
					LSRD-M4PN10	10	

chanhvinh.com

Maintenance Parts

All dimensions in mm.

When ordering, specify the Ordering No.

Shape	Operating Voltage	Operating Voltage Range	Ordering No.	Applicable Load
6V 	400/440V AC	400/440V AC ±10%	TWR546	LSRD-6 (6V AC/DC, LED lamp)
24V 	400/440V AC	400/440V AC ±10%	TWR542	LSRD-2 (24V AC/DC, LED lamp)

- Terminal cover (TWR-VL3) is installed on transformers as standard.
- Transformer is installed to one HW series unit.

Specifications

Part No.	TWR5□6	TWR5□2
Operating Voltage	400/440V AC (50/60Hz)	
Current Draw	2.4VA	
Rated Insulation Voltage	600V	
Insulation Resistance	100MΩ minimum (500V DC megger)	
Operating Temperature	–30 to +60°C (no freezing)	
Operating Humidity	35 to 85% RH (no condensation)	
Storage Temperature	–40 to +80°C (no freezing)	
Vibration Resistance	Damage limits: 30Hz, amplitude 1.5 mm Operating extremes: 5 to 55Hz, amplitude 0.5 mm	
Shock Resistance	Damage limits: 1,000 m/s^2 Operating extremes: 100 m/s^2	
Dielectric Strength	2500V AC, 1 minute	
Terminal Screw	M3.5	
Applicable Wire	2mm^2 maximum, 2 wires maximum	
Weight (approx.)	87g	

Dimensions

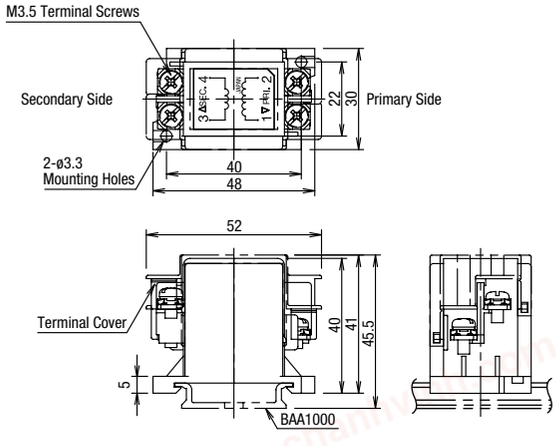

All dimensions in mm.

Accessories

When ordering, specify the Ordering No.

Shape	Material	Part No.	Ordering No.	Package Quantity	Dimensions (mm)
DIN 35 mm Rail  Weight: 200g approx.	Aluminum Length: 1000 mm	**BAA1000**	BAA1000PN10	10	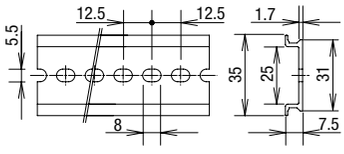
End Clip  Weight: 15g approx.	Metal (zinc-plated steel) Applicable rail: BAA1000 BAP1000	**BNL6**	BNL6PN10	10	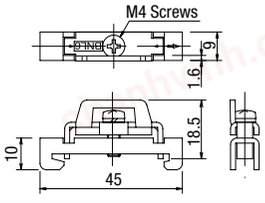

chanhvinh.com

Safety Precautions

- Turn off the power to the HW series switches & pilot lights before starting installation, removal, wiring, maintenance, and inspection of the products. Failure to turn power off may cause electrical shocks or fire hazard.
- To avoid a burn on your hand, use the lamp holder tool when replacing lamps.
- For wiring, use wires of a proper size to meet the voltage, current requirements, and the number of connectable wires (page 65). Failure to tighten the terminal screws may cause overheating and fire.
- Avoid using in places mentioned below to maintain performance of the product.
  -Exposed to direct sunlight
  -Subject to corrosive or flammable gases

Instructions

Panel Mounting

1. Remove the contact block from the operator.
2. Remove the locking ring from the operator
3. Insert the operator into the panel cut-out from the front.
   When mounting the nameplate, insert between the operator and panel.
4. Tighten the locking ring from the back.

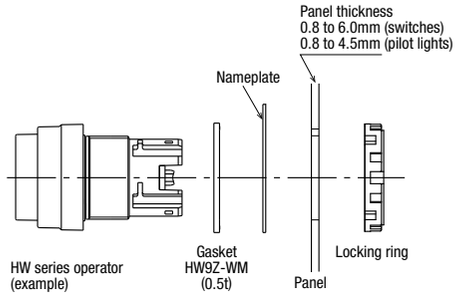

Mounting panel thickness is reduced by 1.5 mm when using a nameplate.

Removing the Contact Block

1. Remove the operator from the contact block by pushing and turning the locking lever in the direction of the arrow shown below. Then the operator can be pulled out.
2. To reinstall, place the TOP marking on the operator and the lock lever in the same direction, and insert the operator into the contact block mounting adapter. Then turn the locking lever in the opposite direction.

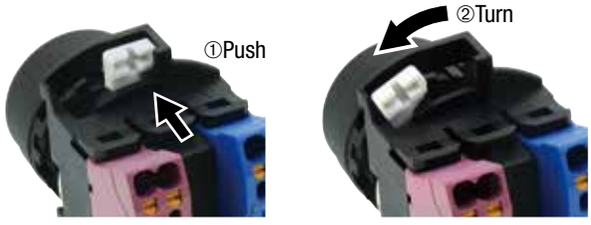

Anti-rotation Ring and Mounting Panel

Turn the TOP marking on the operator and the ▲ mark on the anti-rotation ring to the recess on the mounting panel.

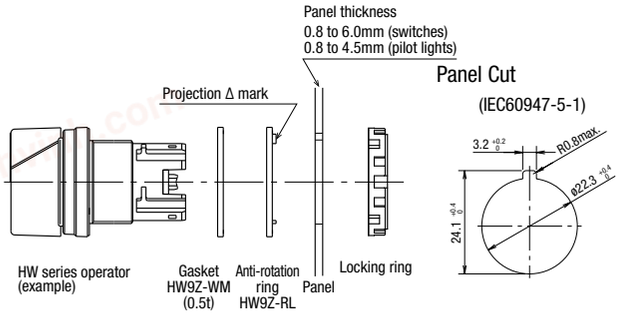

Installing the Pilot Light

Detach the operator unit from the LED unit. After mounting the operator from the front of the panel, attach the LED unit.

Installing / Removing the LED Unit

1. Detach the LED unit by lifting the latch using a small flat blade screwdriver width 0.5mm max.

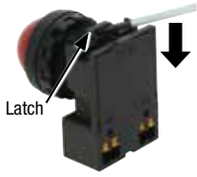

2. To install, align the TOP marking on the operator with the TOP marking on the LED unit.



Notes for Panel Mounting

Locking ring wrench recommended torque
Tighten the bezel to a tightening torque of 2.0 N·m.

Locking ring wrench (MW9Z-T1) can be used to tighten the bezel. Do not use pliers. Excessive tightening will damage the locking ring.



Locking ring wrench (MW9Z-T1)

Panel Thickness

HW series can be mounted on a panel with thickness of 0.8 to 6.0 mm (switches) and 0.8 to 4.5 mm (pilot lights). Take the thickness of nameplate and/or switch guard into consideration.

Instructions

Replacing LED Lamps

Lamps can be replaced using the lamp holder tool (OR-55) from the front of the panel, or by removing the contact block from the operator unit. (See page 53 for lamp holder tool.)

Removing the LED lamp from the front of the panel

Removing

To remove, slip the lamp holder tool onto the lamp head lightly. Then push slightly, and turn the lamp holder tool counterclockwise.

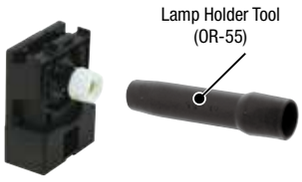

Installing

Insert the lamp head into the lamp holder tool.



Place the pins on the lamp base to the grooves in the lamp socket. Insert the lamp and turn it clockwise.

Removing and Installing the Contact Blocks, Dummy Blocks, and LED Units

Removing

To remove the contact block and dummy block, insert into the flat blade screwdriver latch and move in the direction of the arrow.

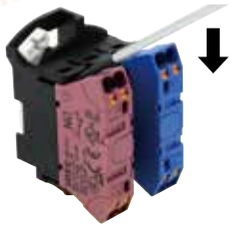

Installing

When installing the contact block or dummy block, make sure that it snaps on to the operator.
For No. 1 and 3 only a contact block or dummy block can be installed.
For No. 2, only a dummy block can be installed.

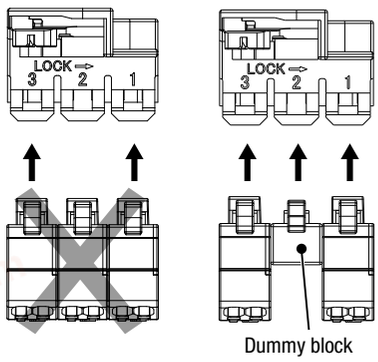

Note) Make sure to attach a correctly assembled connection unit to the operator.
Note) When attaching the contact block to the connection unit, make sure that the connection is detached from the operator. If a contact block is installed with the operator attached to the connection unit, malfunction of the switch may occur.
Note) Full voltage adapters cannot be removed or atached with contact blocks attached.
Note) Attach the full voltage adapter vertically to the connection unit.

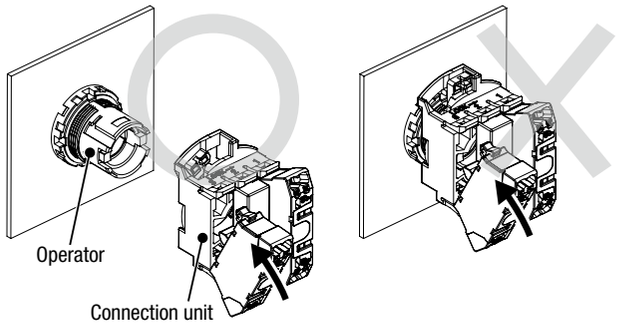

Test Points

Note) Do not insert wires into the test point.

Single contact block

Note) When conducting a continuity test on the contact block, make sure that probes (ø2.0 maximum) of the tester are inserted vertically to the panel.

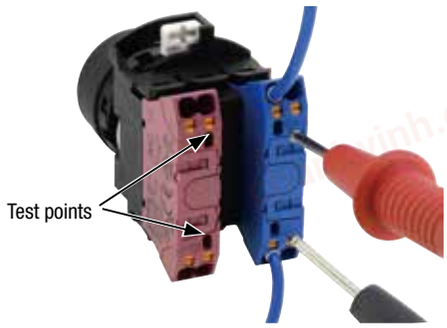

Double contact block

When conducting a continuity test on the first deck, make sure that probes (ø2.0 maximum) of the tester are inserted in an angle of the contact block, in two places as shown below.

When conducting a continuity test on the second deck, make sure that probes (ø2.0 maximum) of the tester are inserted vertically to the panel.

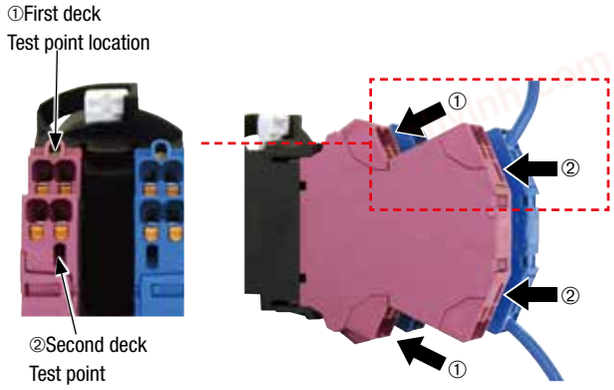

chanhvinh.com

Instructions

Installing/Removing the Buttons and Lenses

<To install> <To remove>

Pushbutton Button

• Flush/Extended

Push in the button to install.



Insert a flat screwdriver between the button and the bezel to remove the button.



• Mushroom/Jumbo Mushroom

Button has threads. Turn clockwise to install the button.



Turn the button counterclockwise to remove.

Note: Jumbo mushroom button cannot be removed.



Illuminated Pushbutton Lens

• Flush/Extended

Push in the lens holder into the operator unit.



Insert a flat screwdriver between the button and the bezel to remove the lens holder.



• Mushroom/Jumbo Mushroom

Lens has threads. Turn clockwise to install the lens.



Lens has threads. Turn counterclockwise to remove the lens.



Pilot Light Lens

• Extended

Lens has threads. Turn clockwise to install the lens.



Turn the lens counterclockwise to remove.



• Square Flush

Push in the lens holder into the operator unit.



Insert a flat screwdriver between the lens and the bezel to remove.



Installing/Removing the Lenses and Marking Plates

Removing

Removing the lens unit

Insert a flat screwdriver in groove of the lens (TOP mark side of the operator or opposite side) to remove the lens unit (lens/marking plate/ lens holder).



Removing the lens

Remove the lens by pushing the lens from the rear to disengage the latches between the lens and the lens holder, using a flat screwdriver as shown below.

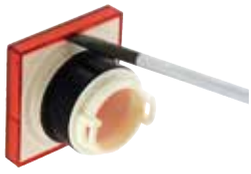

Note: The translucent filter in the lens holder cannot be removed because this filter is sealed to make the unit waterproof and oiltight.

Installing

1. Place the marking plate on the lens holder with the anti-rotation projection engaged and press the lens onto the lens holder to engage the latches.
2. Place the marking plate in the correct orientation.

For Square Lens (square flush lens)
*Note the orientation of the parts.

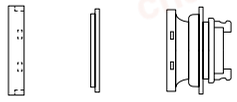

chanhvinh.com

Instructions

Using a Ring Adapter

HW9Z-A25

Install the ring adapter between the HW series unit and panel. Make sure that the side with ridges face the panel.



Nitryl Rubber

Dimensions

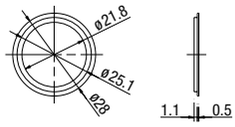

Installation

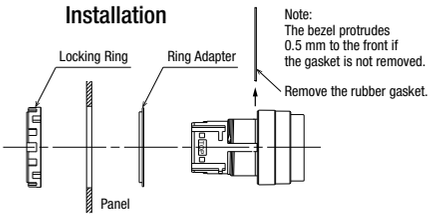

Panel Cut-out

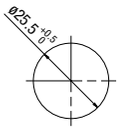

HW9Z-A30

The ring adapter HW9Z-A30 consists of a washer and adapter. Install adapter between the HW series unit and panel. Install washer between the locking ring and panel.



Washer:
metal (brass)

Adapter:
polyamide

Dimensions

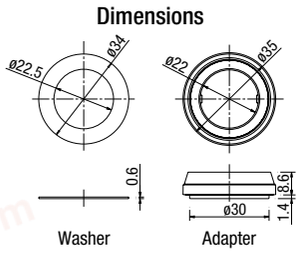

Installation

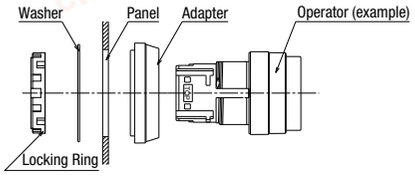

Panel Cut-out

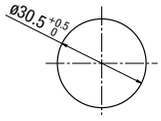

Dual Pushbutton Switches

The pushbuttons cannot be removed or replaced. Do not attempt to remove using a flat screwdriver or pincers, otherwise the pushbuttons may be damaged.

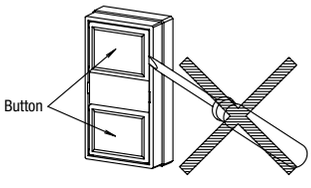

Installing the Rubber Boot for Dual Pushbuttons

When using the HW7D pushbuttons in places where the pushbuttons are subject to water splash or an excessive amount of dust, make sure to use the HW9Z-D7D rubber boot (IP65) which is ordered separately. Remove the rubber gasket pre-installed on the operator, and install the rubber boot from the front of the button.

Notes for Installing the Rubber Boot

Remove the gasket from the operator, and install the rubber boot on the operator. Pull out the seals of the rubber boot and place them around the operator sleeve as shown. Make sure that the seals are not twisted or tucked inside and that the gasket does not remain, otherwise the normal waterproof and dustproof characteristics are not ensured.

① Remove the gasket.

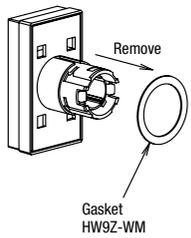

② Install the rubber boot on the pushbuttons

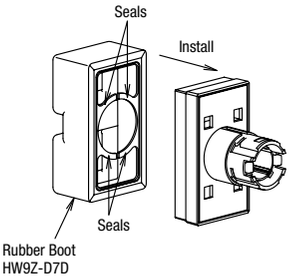

Rubber Boot Installed

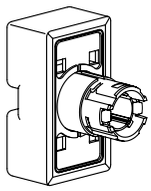

Selector Switches

Turn the operator such as knob, lever, and key to each position accurately. Releasing halfway may cause the operator to return to the former position, or to get stuck between. On spring return two-way types, the center of operators may be misaligned slightly.

Key Selector Switches

Observe the following instructions to prevent malfunction or damage.

- Turn the key securely to each position.
- Insert the key to the bottom of the key hole.
- Do not remove the key from any key retained position.
- Use a key that matches with the number on the key cylinder. However, for standard keys, the key number is engraved on the key but not on the key cylinder.

chanhvinh.com

Instructions

Marking

For HW series pilot lights, legends and symbols can be engraved on the built-in marking plates, or printed film can be inserted under the lens for labeling purposes.

Marking plate and marking film size (mm)

Built-in marking plate and engraving area	Applicable marking film size
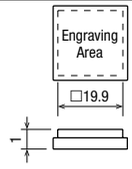 Outside diameter: □22.7 Engraving depth: 0.5mm max.	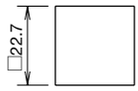 • Two 0.1 mm-thick films or one 0.2 mm-thick film

*Marking films are not supplied.

Insertion Order of Marking Plate and Film

Square Lens (Square flush lens)

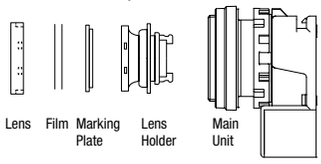

Note: Films are not supplied. When inserting a film, make sure that the marking plate is installed with its uneven side facing the lens holder.

Nameplate

Mounting panel thickness is reduced by 1.5 mm when using a nameplate.

Installing a Marking Plate

Insert a marking plate tin the direction of the arrow ①, and press in as shown ②.

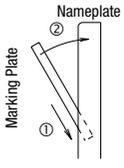

Removing a Marking Plate

Insert a flat screwdriver into the upper middle part of the marking plate and remove. When anti-rotation is not required, remove the projection from the nameplate using pliers.

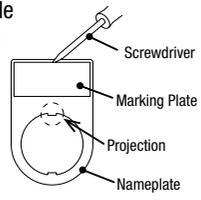

Applicable Wire

When wiring, use the applicable wires shown below.

Applicable Wire and Specifications

Applicable Wire (*1)	0.25 to 1.5mm² (AWG16 to 24)
Wire Strip Length (*2)	8 ± 1mm (*3)
Ferrule Size (*3) (Weidmüller)	H0.25 to H1.5 (without insulated cover)
	H0.25 to H1.5 (with insulated cover)

*1) For applicable wires confirmed by IDEC, see website.

*2) For details on ferrules, see "Wire Size and Recommended Ferrules" table below.

*3) Strip the sheath of the wire 8±1mm from the end.

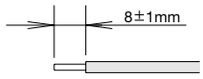

Note: Make sure that the stranded wires do not loosen when using wiring without ferrules.

Wire Size and Recommended Ferrules

Ferrules without insulated covers

Applicable Wire (Stranded Wire)		Wire Strip Length	Weidmüller Recommended Part No.
AWG	mm²		
24	0.25	5 to 6mm	**H0.25/5**
20	0.50	10 to 11mm	**H0.5/10**
18	0.75	10 to 11mm	**H0.75/10**
18	1.00	10 to 11mm	**H1.0/10**
16	1.50	10 to 11mm	**H1.5/10**

Ferrules with insulated covers

Applicable Wire (Stranded Wire)		Wire Strip Length	Weidmüller Recommended Part No.
AWG	mm²		
24	0.25	10 to 11mm	**H0.25/12 HBL**
22	0.34	10 to 11mm	**H0.34/12 TK**
20	0.50	10 to 11mm	**H0.5/14 OR**
18	0.75	10 to 11mm	**H0.75/14 W**
18	1.00	10 to 11mm	**H1.0/14 GE**
16	1.50	10 to 11mm	**H1.5/14 R**

Recommended Tools (Optional)

Name	Weidmüller Recommended Part No.
Crimping tool	**PZ 6 ROTO L**
Flat blade screwdriver	**SDS 0.4×2.0×60**
	SDS 0.4×2.5×75

Note 1) Note the crimping dimensions When using tools other than the recommended crimping tool. For details, see page 65.

Note 2) Use a flat blade screwdriver with a blade size of 0.4×2 to 2.5 mm.

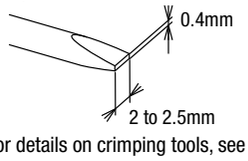

• For details on crimping tools, see page 55.

chanhvinh.com

Instructions

Wiring Procedure

Connecting the wire

Stranded wires with ferrules or solid wire

① Insert the wire to the back of the wire port.

② After wiring, tug lightly to make sure that the wire is properly connected.

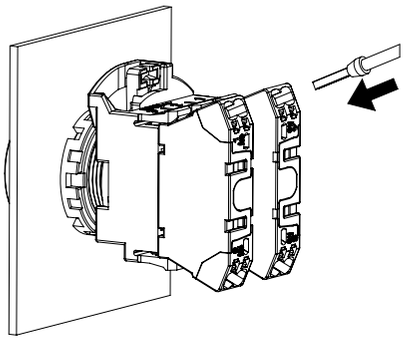

Stranded wire

① While pressing the pusher (orange button) using a flat blade screwdriver (recommended: SDS 0.4×2.0×60 (optional). Insert the wire fully in the wiring port. Wire is connected when the pusher is released.

② After wiring, tug lightly to make sure that the wire is properly connected.

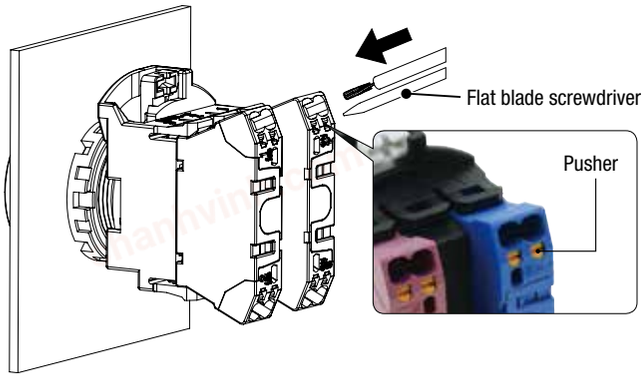

Crimping of Ferrules and Wiring

- Choose an appropriate ferrule for the wire.
- Cut the wire carefully to get a flat end.
- Make sure that ferrule sleeve is completely filled by the conductor. Depending on the cross section, the conductor should protrude approx. 0 to 1 mm from the ferrule sleeve.

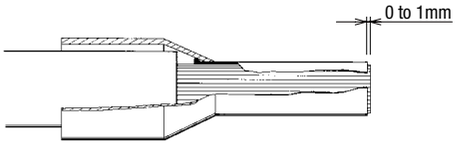

- When crimping, refer to the instructions of the crimping tool.

Faults which can occur during crimping:

- Cracks along the sides and die impressions
- Splitting of the ferrules
- Asymmetrical crimping shape
- Extreme burrs formed along the sides
- Ferrule not filled by conductor
- Single conductors pushed back by protruding from the insulated cover
- Single conductors squeezed off
- Insulation cover damaged by the crimping jaw
- Conductor insulation not pushed into the insulated cover
- Ferrule bent longitudinally after crimping

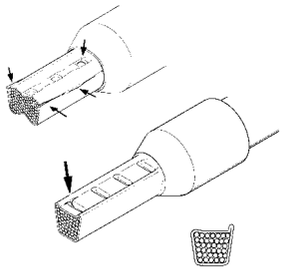

Formation of cracks at the sides. Sides spilt open

Formation of cracks at the impressions of the crimping jaw

Asymmetrical crimping shape. Burr formation on one side



Asymmetrical crimping shape. Burr formation on one side

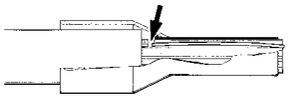

Single conductor squeezed off

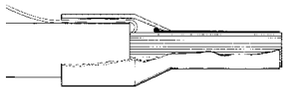

Single conductor pushed back

chanhvinh.com

Instructions

Crimping dimensions: W2.4×H1.9 mm

Maximum connectable crimping size is W2.4×H1.9. Make sure that the ferrule size will be smaller than this dimension. (Recommended crimping tool: PZ 6 Roto (optional) Weidmüller

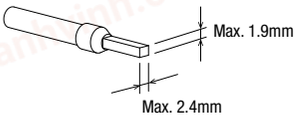

Note 1) If a tool other than the recommended crimping tool is used, the ferrule may not be crimped to the appropriate size and the clamp or spring inside the contact block may be deformed and may not operate normally.

Note 2) Pin crimp terminals cannot be used.

Removing the Wire

When removing the wire, push the pusher using a flat blade screwdriver (recommended: SDS 0.4×2.0×60 (optional: see page 55)) and pull wire out in the direction of the arrow.

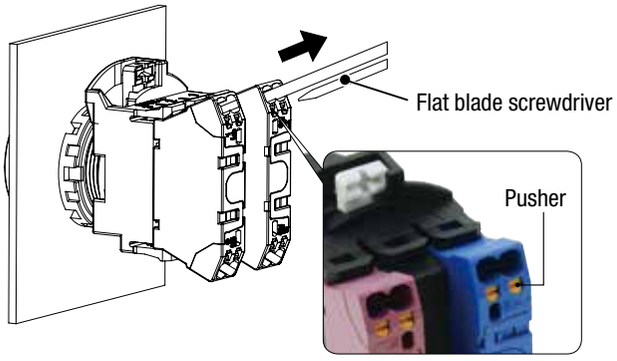

<Notes>

- Operate the pusher with a force of 20N. Do not press excessively. Otherwise, the switch may be damaged.
- Do not pull the wire out without depressing the pusher. When pulling the wire, be sure to pull in a straight direction. Otherwise, the socket may be damaged.

Number of Connectable Wires

Unit	Connectable wires		No. of connectable wires
HW-P Contact block Pilot light	Solid wire	0.25 to 1.5mm^2 (AWG16 to 24)	2
	Stranded wire	0.25 to 1.5mm^2 (AWG16 to 24)	
	Ferrule	Without insulated cover 0.25mm^2: conductor length:5 to 10mm 0.5 to 1.0mm^2: conductor length: 6 to 10mm 1.5mm^2: conductor length 8 to 10mm With insulated cover 0.25 to 1.0mm^2: conductor length 6 to 10mm 1.5mm^2: conductor length 8 to 10mm Note) Pin terminals cannot be used	

Note) Only one wire can be inserted into one wire port.

chanhvinh.com

Instructions (Illuminated / Non-illuminated Buzzers)

Installing the terminal rubber boot

1. Cut the end of terminal rubber boot to fit the cable size.
2. Insert the cable into the terminal rubber boot in the direction of arrow shown below.

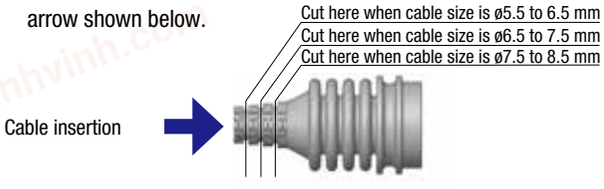

3. Strip the insulation of the cable 30 mm from the end and wire as instructed in “Wiring”.
4. Install the terminal rubber boot as shown below.

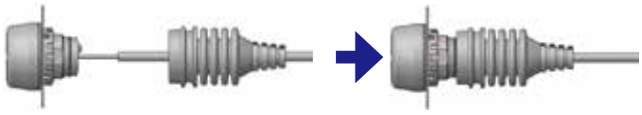

5. Cover part B with part A.



6. Make sure that the bellows is 17 to 22 mm long.

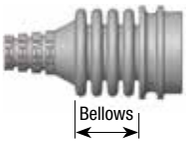

Note for terminal rubber boot

- Be sure to use bellows with an appropriate length. Otherwise, waterproof characteristics cannot be achieved.
- Maintain a cable angle of 45° maximum to the axis of the buzzer, otherwise the terminal rubber boot may come off.

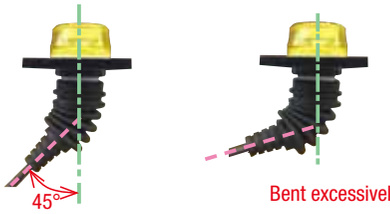

Panel Mounting

- Insert the buzzer into the panel cut-out from the front, and tighten the locking ring from the back.

Note for panel mounting

- Use the optional locking ring wrench (MW9Z-T1) to tighten the locking ring to a recommended tightening torque of 1.5 to 2.0 N·m.
- Do not use pliers and do not tighten excessively, otherwise the buzzer may be damaged.



Wiring Procedure

Connecting the wire

Solid wire

Strip the insulation of the cable from 8mm from the end and insert into the wire port.
After wiring, tug lightly to make sure that the wire is properly connected.

Stranded wire with ferrule

Crimp a ferrule with a conductor length of 8mm and insert to the back of the wire port. After wiring, tug lightly to make sure that the wire is properly connected.

Recommended ferrule

Item	Phoenix Contact Recommended Part No.	Weidmüller Recommended Part No.
Ferrule (without insulation cover)	A0,5-8	—
	A0,75-8	
	A1-8	
Ferrule (with insulation cover)	AI0,25-8YE	**H0.25/12HBL**
	AI0,5-8WH	**H0.5/14OR**
	AI0,75-8GY	**H0.75/14W**

Stranded wire

Strip the wire insulation 8mm from the end and push in the wire removal part above the wire port using a small flat screwdriver. Release the wire removal part. Make sure that the wire does not loosen.

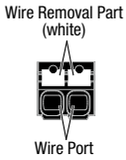

Wire removal

Push in the white wire removal part above the wire ports using a small flat screw driver, and pull out the wire.

Flat blade screwdriver

Use a optional flat blade screwdriver (SDS 0.4×2.5×75 (see page 42)) or a commercial screwdriver (blade shape: straight, blade size 2.5mm)

Notes for wiring

- Make sure that the terminal is not constantly pulled by the wire.
- Wiring must be performed in environments of –5 to +50°C.
- Do not damage the conductor wire when stripping the wire insulation.
- Do not use wires with bent or deformed conductors wires. Deformed wiring may cause failures such as strength degradation and overheating. Connect one wire per terminal. Connecting two wires to a terminal may cause loose wiring and strength degradation.
- Do not solder the conductor lines. Connecting soldered stranded wires may loose wiring and strength degradation.
- If a stranded wire has loose wires, twist the conductor wires before connection. However be careful not to twist excessively.

chanhvinh.com

Instructions (Emergency Stop Switches)

When using the HW series control units in a safety-related circuit of a control system, observe safety rules and regulations of each country concerning particular applications of the actual machines and facilities. Perform risk assessment before operation to ensure safety.

Chattering / Contact Bounce

When the button is reset by pulling or turning, the NC main contacts will bounce. When pressing the button, the NO monitor contacts will bounce. When designing a control circuit, take the contact bounce time into consideration (reference value: 20 ms).
Also, do not apply shock to the switch as chattering may occur.

Nameplate or Switch Guard

When anti-rotation is not required, remove the projection from the nameplate or switch guard using pliers. Mechanical indicator types have projections on the operator. Make sure to remove the projection on the nameplate or switch guard.

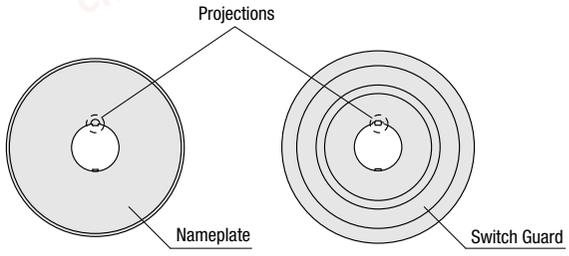

Handling

Do not expose the switch to excessive shocks and vibrations, otherwise the switch may be deformed or damaged, causing malfunction or operation failure.

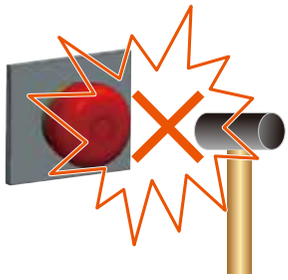

chanhvinh.com

Ordering Terms and Conditions

Thank you for using IDEC Products.

By purchasing products listed in our catalogs, datasheets, and the like (hereinafter referred to as "Catalogs") you agree to be bound by these terms and conditions. Please read and agree to the terms and conditions before placing your order.

1. Notes on contents of Catalogs

(1) Rated values, performance values, and specification values of IDEC products listed in this Catalog are values acquired under respective conditions in independent testing, and do not guarantee values gained in combined conditions.
Also, durability varies depending on the usage environment and usage conditions.

(2) Reference data and reference values listed in Catalogs are for reference purposes only, and do not guarantee that the product will always operate appropriately in that range.

(3) The specifications / appearance and accessories of IDEC products listed in Catalogs are subject to change or termination of sales without notice, for improvement or other reasons.

(4) The content of Catalogs is subject to change without notice.

2. Note on applications

(1) If using IDEC products in combination with other products, confirm the applicable laws / regulations and standards.
Also, confirm that IDEC products are compatible with your systems, machines, devices, and the like by using under the actual conditions. IDEC shall bear no liability whatsoever regarding the compatibility with IDEC products.

(2) The usage examples and application examples listed in Catalogs are for reference purposes only. Therefore, when introducing a product, confirm the performance and safety of the instruments, devices, and the like before use. Furthermore, regarding these examples, IDEC does not grant license to use IDEC products to you, and IDEC offers no warranties regarding the ownership of intellectual property rights or non-infringement upon the intellectual property rights of third parties.

(3) When using IDEC products, be cautious when implementing the following.

i. Use of IDEC products with sufficient allowance for rating and performance

ii. Safety design, including redundant design and malfunction prevention design that prevents other danger and damage even in the event that an IDEC product fails

iii. Wiring and installation that ensures the IDEC product used in your system, machine, device, or the like can perform and function according to its specifications

(4) Continuing to use an IDEC product even after the performance has deteriorated can result in abnormal heat, smoke, fires, and the like due to insulation deterioration or the like. Perform periodic maintenance for IDEC products and the systems, machines, devices, and the like in which they are used.

(5) IDEC products are developed and manufactured as general-purpose products for general industrial products. They are not intended for use in the following applications, and in the event that you use an IDEC product for these applications, unless otherwise agreed upon between you and IDEC, IDEC shall provide no guarantees whatsoever regarding IDEC products.

i. Use in applications that require a high degree of safety, including nuclear power control equipment, transportation equipment (railroads / airplanes / ships / vehicles / vehicle instruments, etc.), equipment for use in outer space, elevating equipment, medical instruments, safety devices, or any other equipment, instruments, or the like that could endanger life or human health

ii. Use in applications that require a high degree of reliability, such as provision systems for gas / waterworks / electricity, etc., systems that operate continuously for 24 hours, and settlement systems

iii. Use in applications where the product may be handled or used deviating from the specifications or conditions / environment listed in the Catalogs, such as equipment used outdoors or applications in environments subject to chemical pollution or electromagnetic interference
If you would like to use IDEC products in the above applications, be sure to consult with an IDEC sales representative.

3. Inspections

We ask that you implement inspections for IDEC products you purchase without delay, as well as thoroughly keep in mind management/maintenance regarding handling of the product before and during the inspection.

4. Warranty

(1) Warranty period

The warranty period for IDEC products shall be one (1) year after purchase or delivery to the specified location. However, this shall not apply in cases where there is a different specification in the Catalogs or there is another agreement in place between you and IDEC.

(2) Warranty scope

Should a failure occur in an IDEC product during the above warranty period for reasons attributable to IDEC, then IDEC shall replace or repair that product, free of charge, at the purchase location / delivery location of the product, or an IDEC service base. However, failures caused by the following reasons shall be deemed outside the scope of this warranty.

i. The product was handled or used deviating from the conditions / environment listed in the Catalogs

ii. The failure was caused by reasons other than an IDEC product

iii. Modification or repair was performed by a party other than IDEC

iv. The failure was caused by a software program of a party other than IDEC

v. The product was used outside of its original purpose

vi. Replacement of maintenance parts, installation of accessories, or the like was not performed properly in accordance with the user's manual and Catalogs

vii. The failure could not have been predicted with the scientific and technical standards at the time when the product was shipped from IDEC.

viii. The failure was due to other causes not attributable to IDEC (including cases of force majeure such as natural disasters and other disasters)

Furthermore, the warranty described here refers to a warranty on the IDEC product as a unit, and damages induced by the failure of an IDEC product are excluded from this warranty.

5. Limitation of liability

The warranty listed in this Agreement is the full and complete warranty for IDEC products, and IDEC shall bear no liability whatsoever regarding special damages, indirect damages, incidental damages, or passive damages that occurred due to an IDEC product.

6. Service scope

The prices of IDEC products do not include the cost of services, such as dispatching technicians. Therefore, separate fees are required in the following cases.

(1) Instructions for installation / adjustment and accompaniment at test operation (including creating application software and testing operation, etc.)

(2) Maintenance inspections, adjustments, and repairs

(3) Technical instructions and technical training

(4) Product tests or inspections specified by you

The above content assumes transactions and usage within your region. Please consult with an IDEC sales representative regarding transactions and usage outside of your region. Also, IDEC provides no guarantees whatsoever regarding IDEC products sold outside your region.

IDEC CORPORATION

www.idec.com

Head Office
6-64, Nishi-Miyahara-2-Chome, Yodogawa-ku, Osaka 532-0004, Japan

USA	IDEC Corporation	Tel: +1-408-747-0550	opencontact@idec.com	**Taiwan**	IDEC Taiwan Corporation	Tel: +886-2-2577-6938	service@tw.idec.com
Germany	APEM GmbH	Tel: +49-40-25 30 54-0	service@eu.idec.com	**Hong Kong**	IDEC Izumi (H.K.) Co., Ltd.	Tel: +852-2803-8989	info@hk.idec.com
Singapore	IDEC Izumi Asia Pte. Ltd.	Tel: +65-6746-1155	info@sg.idec.com	**China**	IDEC (Shanghai) Corporation	Tel: +86-21-6135-1515	idec@cn.idec.com
Thailand	IDEC Asia (Thailand) Co., Ltd	Tel: +66-2-392-9765	sales@th.idec.com		Beijing Branch	Tel: +86-10-6581-6131	idec@cn.idec.com
Australia	IDEC Australia Pty. Ltd.	Tel: +61-3-8523-5900	sales@au.idec.com		Guangzhou Branch	Tel: +86-20-8362-2394	idec@cn.idec.com
India	IDEC Controls India Private Limited	Tel: +91-80679-35328	info_india@idec.com	**Japan**	IDEC Corporation	Tel: +81-6-6398-2527	marketing@idec.co.jp

Specifications and other descriptions in this brochure are subject to change without notice.
Information in this brochure is current as of October, 2020.
2020 IDEC Corporation, All Rights Reserved.

EP1740-1