chanhvinh.com

HE3B Series Pushbutton Enabling Switch

HE3B Key features include:

- 3 position funtionality (OFF – ON – OFF) as required for manual robotic control
- Provides a high level of safety based on human behavioral studies that determine personnel may squeeze OR let go when presented with a panic situation
- Contacts will not re-close when released from Off→On (3→1) (per IEC60204-1; 9.2.5.8)
- Multiple contacts for enhanced reliability
- Snap acting contacts from position 1 to 2
- Available with or without rubber cover



Specifications

Conforming to Standards		IEC60947-5-1, EN60947-5-1, JIS C8201-5-1, UL508, CSA C22.2 No 14
Application Standards		ISO12100/EN292, IEC60204-1/EN60204-1, ISO11161/prEN11161, ISO10218/EN775, ANSI/RIA R15.06
Operating Temperature		–25 to +60°C (no freezing)
Operating Humidity		45 to 85% RH maximum (no condensation)
Storage Temperature		–40 to +80°C (no freezing)
Pollution Degree		3
Contact Resistance		50mΩ maximum
Insulation Resistance		Between live & dead metal parts: 100MΩ maximum
		Between positive & negative live parts: 100MΩ minimum
Impulse Withstand Voltage		1.5kV
Operating Frequency		1200 operations/hour
Mechanical Life		Position 1→2: 1,000,000 operations minimum
		Position 1→2→3→1: 100,000 operations minimum
Electrical Life		100,000 operations minimum at rated load
Shock Resistance	**Operating Extremes**	100m/s² (10 G)
	Damage Limits	1000m/s² (100 G)
Vibration Resistance	**Operating Extremes**	5 to 55Hz, applitude 0.5mm minimum
	Damage Limits	16.7Hz, applitude 1.5mm minimum
Terminal		0.110" quick connect / solder terminal
Recommended Wire Size		0.5mm² maximum / 1 line (20AWG)
Solder Heat Resistance		260°C / 3 seconds maximum
Terminal Pulling Strength		20N minimum
Recommended Screw Torque		0.68 to 0.88Nm
Degree of Protection		with rubber cover: IP65, without rubber cover: IP40 (IEC 60529)
Conditional Short-Circuit Current		50A (125V)
Recommended Short Circuit Protection		125V/10A fast blow fuse (IEC 60127-1)
Weight		without rubber cover - Approx. 14g with rubber cover - Approx. 18g
Circuit Opening Force		500N minimum

chanhvinh.com

Part Numbers

Model			Contact Arrangement	Part Numbers
	Without Rubber Cover		DPDT	HE3B-M2
	With Rubber Cover	Yellow		HE3B-M2PY
		Black		HE3B-M2PB

Contact Ratings

Rated Insulation Voltage (Ui)			125V	
Thermal Current (Ith)			3A	
Rated Operating Voltage (Ue)			30V	125V
Rated Operating Current (Ie)	**AC**	**Resistive Load (AC-12)**	–	1A
		Inductive Load (AC-15)	–	0.7A
	DC	**Resistive Load (DC-12)**	1A	0.2A
		Inductive Load (DC-13)	0.7A	0.1A
Contact Structure (3 Position Switch)			2 contacts (DPDT)	

Circuit Diagrams

Terminal Circuit Diagrams (bottom view)

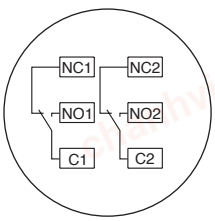

1. 3 position switch: 2 contacts, terminal no. = between NO1-C1, between NO2-C2
2. Use between NO-C for OFF→ On→ OFF 3 position switch (NC is not used).

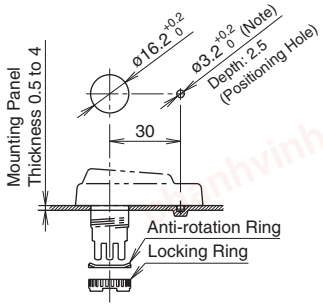

1. Recommended Lock Nut Torque: 0.68 to 0.88Nm.
2. Use a lock nut tool to screw on the lock nut (see page 412).
3. To retain the switches waterproof performance, do not penetrate the rubber cover.
4. Remove the rubber cover projection if you do not want a positioning hole. (Do not penetrate the rubber cover).

chanhvinh.com

Operating Characteristics

Operating Characteristics (without rubber cover/pushing button part A and B)

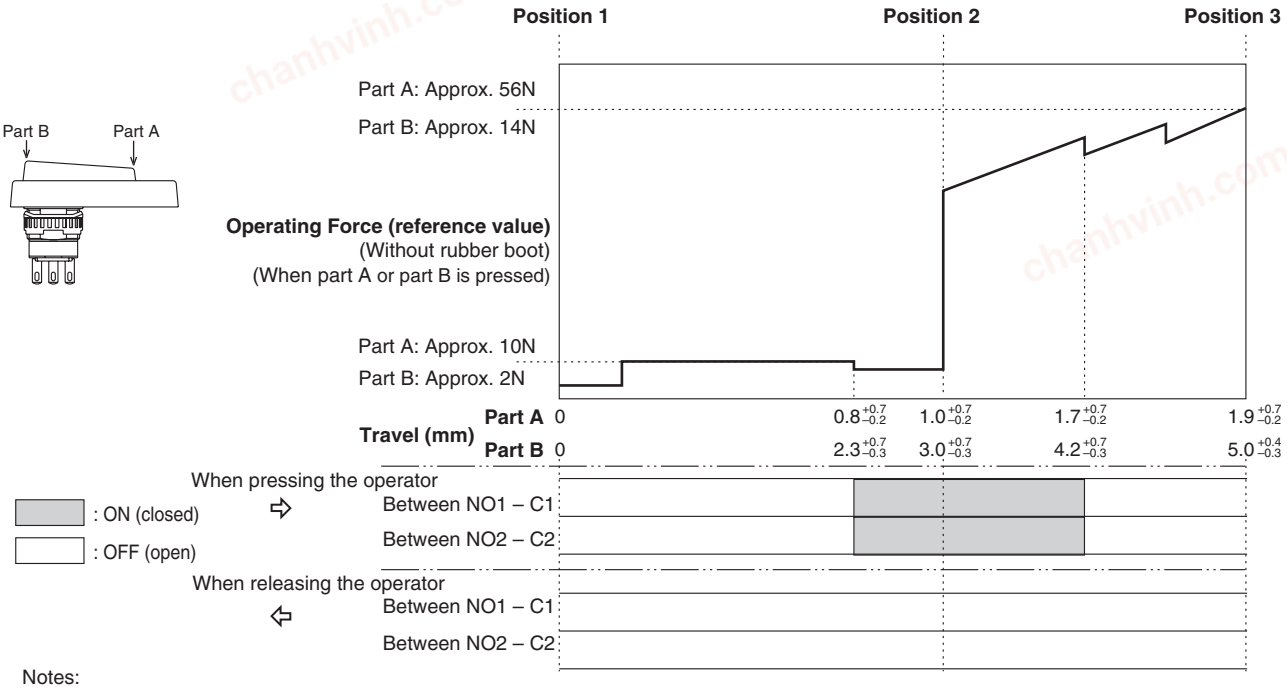

Notes:
• When rubber boot is used, operating force depends on the operating temperature.

Dimensions (mm)

Without Rubber Cover

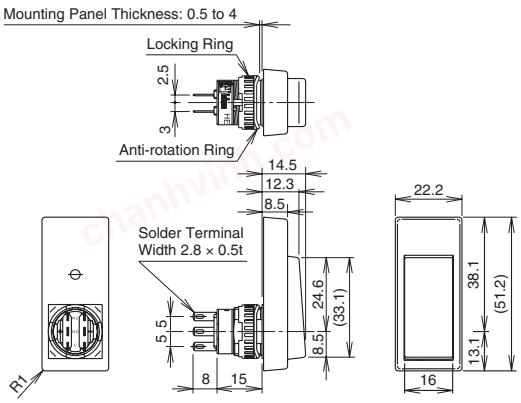

With Rubber Cover

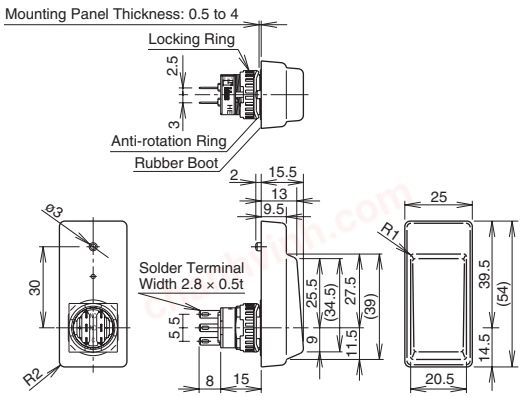

All dimensions in mm.

Accessories

Replacement Rubber Cover

Appearance	Color	Part Number	Material
	Yellow	HE9Z-D3Y	Silicon Rubber
	Black	HE9Z-D3B	

Lock Nut Tool

Appearance	Part Number	Material
	MT-001	Metal

chanhvinh.com

General Information

Safety Precautions

- In order to avoid electric shock or fire, turn power off before installation, removal, wire connection, maintenance or inspection of switch.
- Follow specification when installing. Improper electrical load may damage switch, cause electric shock, or fire.
- Use proper wire diameter to meet voltage and current requirements. Using improper wires or incomplete soldering may cause fire due to abnormal heat generation.

Installation Precautions

HE2B

- M3 nut is inside the rubber cover.

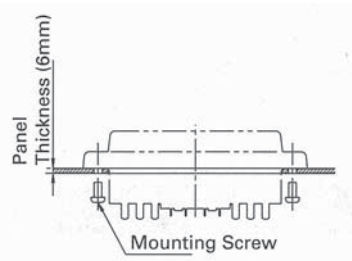

HE2B/HE3B

- A change in internal air pressure may cause the rubber boot to expand and shrink on an enabling switch that has the rubber boot sealed. This may affect the performance of the switch. Periodically check to ensure that the enabling switch is operating correctly.
- If the panel is not level when mounting an enabling switch, the waterproof feature cannot be guaranteed.

HE3B

- The rubber boot has a tab to be used for orientation. When making a positioning hole in a panel, do not make a hole in the rubber boot, or the waterproof feature cannot be guaranteed. When the positioning hole is not on the panel, remove the tab, but do not make a hole in the rubber boot.
- When tightening the locking ring, secure the flange to prevent the enabling switch from rotating. In applications where the enabling switch is to be rotated, mount the switch in a recess on the panel as shown.

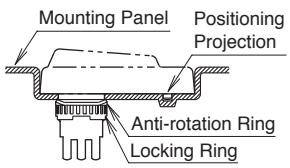

Wiring Precautions

HE1B/HE2B/HE3B

- Applicable wire size is 0.5mm² (20AWG) (maximum) / 1 line.
- When soldering the terminal, solder at a temperature of 260°C within 3 seconds. Use non-corrosive liquid rosin as soldering flux.

HE1G

- Wire Stripping Information

Wire Length	Terminal Number 1-4	Terminal Number 5-8
L1, L2 (mm)	L1=40mm	L2=27mm
L3 (mm)	L3=6mm	

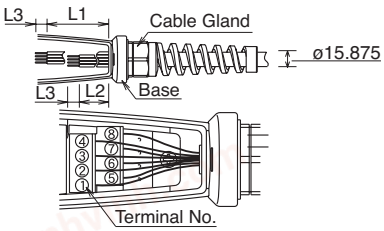

- Applicable Wire Size:0.14 to 1.5mm² (24 - 16AWG, one wire per terminal)
- Recommended Torque

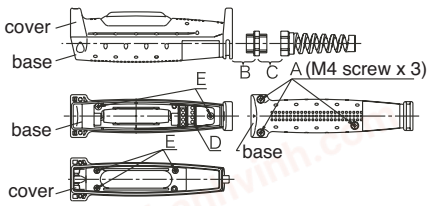

	See Drawing Above	Recommended Torque
Rubber Boot & Base	A	1.2±0.1Nm
Connector & Grip Switch	B	4.0±0.3Nm
Connector	C	4.0±0.3Nm
Terminal Screw	D	0.5±0.6Nm
Do Not Remove	E	

Use Precautions

HE2B/HE3B/HE1G

- To ensure the highest level of reliability connect both contacts to a monitoring device such as a safety relay.

HE1B/HE2B/HE3B

- When installing the enabling switch ensure that it cannot be accidently activated. For example, a protrusion from a teaching pendant could cause the enabling switch to be activated by the weight of the teaching pendant.