chanhvinh.com

IDEC

Think Automation and beyond...

New
Double contact block

Flush Silhouette Switches ø22mm CW Series









IDEC CORPORATION

(13/07/23)

chanhvinh.com

GOOD DESIGN

Safety in style and

ø22mm CW Series
Flush Silhouette Switches



Double Contact Block

New double contact blocks with four-contact configurations.

(Illuminated pushbuttons, pushbuttons, selector switches, key selector switches)

Double contact blocks

New



Single contact blocks



Shortest in its class (as of March 2013)

Short depth behind the panel for compact equipment.

Double: 59.9mm (maintained: 64.6mm) Single: 39.9mm (maintained: 44.6mm)

Switching capacity is 120V AC, 10A (resistive load). The compact style requires less depth behind the panel. Can be used with IDEC's FB and other 22mm control boxes. No transformer needed for any voltage.

Double contact block

New



59.9mm

Single contact block

2.5mm-thick bezel

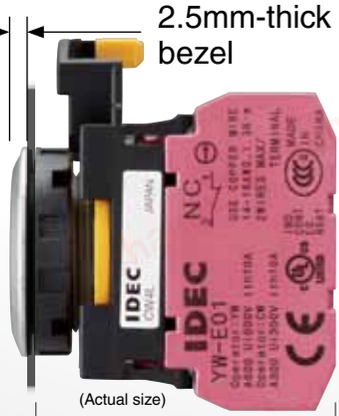

39.9mm

Fits in small space

Four-contact illuminated pushbutton

Conventional

40% less space

50% less weight

New

CW series double contact block

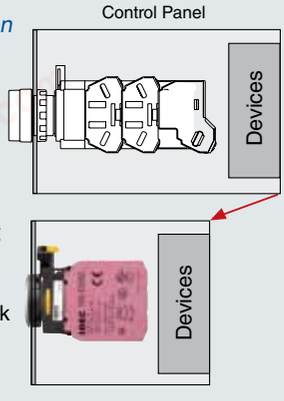

Two-contact illuminated pushbutton

Conventional

50% less space

59% less weight

CW series single contact block

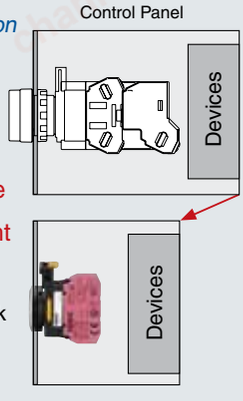

sophistication



Sleek and stylish switches and pilot lights with a 2.5mm-thick bezel

The CW series gives a sleek, stylish image to your machines or control panels. The surface is safer with less chance of unexpected operation or accidents by hitting the projections, and also is cleaner with less dust build-up.

Safety

Third-generation safety construction

Two-action removal of contact blocks

IDEC's original two-action push-turn locking lever provides a higher level of safety by preventing unexpected release of the locking lever. Whether the contact block is installed securely can be checked easily from the back of the panel, with the position of the locking lever.

Locking lever integrated with guard

Prevents locking lever from unexpected release or damage by trapped wires.



Removing contact blocks

IP20 Finger-safe Terminal

Finger-safe, IP20 terminal prevents electrical shock.



Variety

Illuminated Pushbuttons (round flush or extended)



See page 8.

Pilot lights (round flush or extended)



See page 10.

Pushbuttons (round flush or extended)



See page 11.

Selector Switches (knob or lever)
2- and 3-position

Knob Lever



Low extension with flush silhouette.

See page 12.

Key Selector Switches
Wave key
7 different key numbers

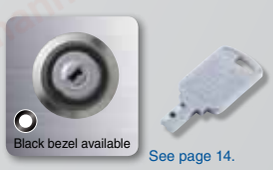

Hard to duplicate, wave-key ensures a high level of safety.

See page 14.

Colors

Illuminated Pushbuttons/Pilot Lights



Amber (A) Blue (S) Green (G) Red (R) Pure White (PW) Yellow (Y)

Pushbuttons



Black Blue Green Red White Yellow

Bezels



Metallic Black (plastic)

chanhvinh.com

ø22 Flush Silhouette Switches CW Series

Flush bezel projects only 2.5mm from front of panel
Only 39.9mm depth behind the panel (single contact block, momentary).

- ø22.3mm mounting hole compliant with IEC 60947-5-1
- 3.5-mm operator travel for pushbuttons ensures comfortable and reliable operation.
- Black plastic and metallic bezels available.
- Four-contact configuration is available with double contact blocks.
- Direct opening NC contact ensures shutdown without failure.
- Seven different keys can be chosen for key selector switches.
- 10A contact rating. Up to three contact blocks for non-illuminated and two contact blocks for illuminated units can be connected.
- Contact blocks can be removed by the two-action locking lever integrated with a guard, ensuring safety.
- IP20 finger-safe screw terminals
- IP66/67, UL Type 4X degree of protection from panel front (see Table 1).

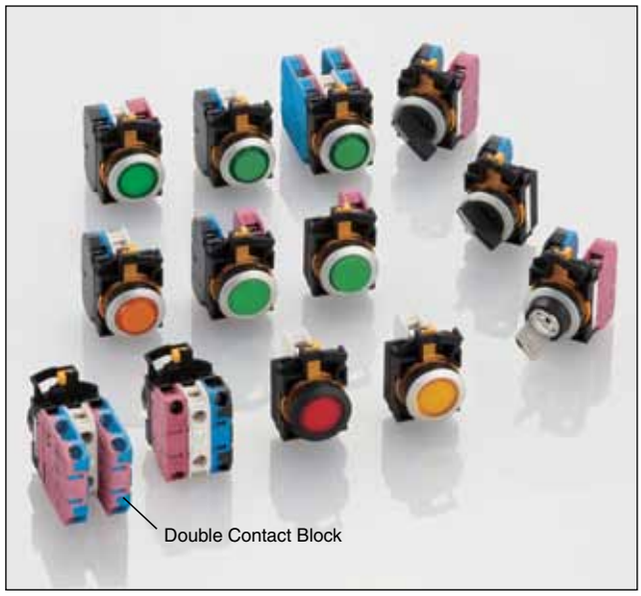

Applicable Standards	Mark	File No. or Organization
UL508 CSA C22.2 No.14	c UL us LISTED	UL/c-UL File No. E68961
EN60947-5-1	CE	EU Low Voltage Directive
GB14048.5	CCC	No. 2012010305589209 (Pilot lights: No. 2012010304567962)

Contact Ratings

Rated Insulation Voltage (Ui)				300V		
Rated Thermal Current (Ith)				10A		
Rated Operating Voltage (Ue)				24V	120V	240V
Rated Operating Current (Ie)	Electrical Life 50,000 operations	AC 50/60 Hz	Resistive Load (AC-12)	10A	10A	6A
			Inductive Load (AC-15)	10A	6A	3A
		DC	Resistive Load (DC-12)	8A	2.2A	1.1A
			Inductive Load (DC-13)	4A	1.1A	0.55A
	Electrical Life 100,000 operations	AC 50/60 Hz	Resistive Load (AC-12)	5A	5A	3A
			Inductive Load (AC-15)	5A	3A	1.5A
		DC	Resistive Load (DC-12)	4A	1.1A	0.55A
			Inductive Load (DC-13)	2A	0.55A	0.27A
Contact Material				Silver		

- Minimum applicable load (reference value): 3V AC/DC, 5 mA (Applicable range is subject to the operating conditions and load.)

Note: The operational current represents the classification by making and breaking currents (IEC 60947-5-1).

- UL, c-UL rating: A300, CCC rating: A300

Table 1 (Degree of Protection)

	IP65	IP66	IP67	UL Type 4X
Illuminated Pushbutton	Yes	Yes (Note)	Yes (Note)	Yes (Note)
Pilot Light	Yes	Yes	No	Yes
Pushbutton	Yes	Yes (Note)	Yes (Note)	Yes (Note)
Selector Switch	Yes	Yes	Yes	Yes
Key Selector Switch	Yes	Yes	No	Yes

Note: When used with rubber boot (CW9Z-D11, -D12)

Specifications

Operating Temperature	Non-illuminated: –25 to +60°C (no freezing) LED illuminated: –25 to +55°C (no freezing)	
Operating Humidity	45 to 85% RH (no condensation)	
Storage Temperature	–40 to +80°C (no freezing)	
Contact Resistance	50 mΩ maximum (initial value)	
Insulation Resistance	100 MΩ minimum (500V DC megger)	
Overvoltage Category	II (IEC 60664-1)	
Impulse Withstand Voltage	2.5 kV (IEC 60664-1/60947-5-1)	
Pollution Degree	3 (IEC 60947-5-1)	
Vibration Resistance	Operating extremes: 5 to 55Hz, amplitude 0.5 mm Damage limits: 30 Hz, amplitude 1.5 mm	
Shock Resistance	Operating extremes: 100 m/s^2 Damage limits: 1000 m/s^2	
Mechanical Life (minimum operations)	Illuminated pushbutton/pushbutton Momentary: 2,000,000 (single contact block) 1,000,000 (double contact block) Maintained: 250,000 (single contact block) 100,000 (double contact block) Selector switch: 250,000 (single contact block) 100,000 (double contact block) Key selector switch: 250,000 (single contact block) 100,000 (double contact block)	
Electrical Life (minimum operations)	Single contact block	50,000 (see Contact Ratings) 100,000 (see Contact Ratings)
	Double contact block	25,000 (see Contact Ratings) 50,000 (see Contact Ratings)
	Switching frequency Momentary: 900 operations/h Maintained: 1800 operations/h	
Degree of Protection (IEC 60529)	Panel front: See table to the left Terminal: IP20 (IEC 60529)	
Short-circuit Protection	250V/10A fuse (Type aM IEC 60269-1, IEC 602069-2)	
Electrical Shock Protection	Class II (IEC 61140)	
Terminal Style	Screw terminal (M3.5 slotted Phillips screw) (Ring terminal cannot be used.)	
Bezel Material	Polyamide	
Applicable Wire Size	Up to 2 wires of 2 mm^2 (solid wire ø1.6) maximum (AWG14 to 16)	
Recommended Tightening Torque	Terminal: 1.0 to 1.3 N·m Locking ring: 1.2 N·m	

chanhvinh.com

Weight (Examples)

Illuminated Pushbutton	46g (CW1L-M1E02QH, 2 contacts) 62g (CW1L-M1E22QH, 4 contacts)
Pilot Light	27g (CW1P-1EQH)
Pushbutton	45g (CW1B-M1E03, 3 contacts) 52g (CW1B-M1E22, 4 contacts)
Selector Switch	48g (CW1S-2E03, 3 contacts) 55g (CW1S-2E22, 4 contacts)
Key Selector Switch	61g (CW1K-2AE03, 3 contacts) 68g (CW1K-2AE22, 4 contacts)

Direct Opening of Key Selector Switch

Applicable Type	2-position (3NC)	3-position (2NC)
Minimum Operator Angle for Direct Opening Action	90°	45°
Minimum Operator Torque for Direct Opening Action	0.2 N·m	0.3 N·m
Maximum Operator Angle	90°	45°

LED Module

Rated Insulation Voltage (Ui)	250V					
Rated Operating Voltage (Ue)	6V AC/DC	12V AC/DC	24V AC/DC	100/120V AC	200/220V AC	230/240V AC
Operating Voltage Range	6V AC/DC±10%	12V AC/DC ±10%	24V AC/DC ±10%	100/120V AC ±10%	200/220V AC ±10%	230/240V AC ±10%
Illumination Color Code ②	A (amber), G (green), PW (pure white), R (red), S (blue)					
LED Module Part No.	**CW-EAQ2②**	**CW-EAQ3②**	**CW-EAQ4②**	**CW-EAQH②**	**CW-EAQM②**	**CW-EAQM4②**
Current Draw	15 mA	15 mA	16.5 mA	18 mA	20 mA	18 mA
Life (reference value)	Approx. 30,000 hours (the illuminance is reduced to 50% of the initial intensity when used on complete DC at 25°C.)					
Internal Circuit	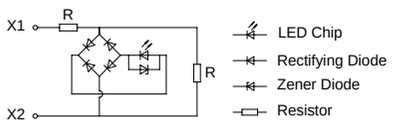			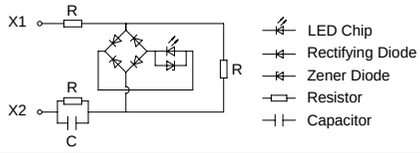		

- Specify an illumination color code in place of ② in the Part No.
- Use the pure white (PW) LED module for yellow illumination.

Contact Blocks

	Single Contact Block		Double Contact Block		
Contact	1NO	1NC	2NO	2NC	1NO-1NC
Part No.	**YW-E10R**	**YW-E01**	**YW-EW2R0**	**YW-EW02**	**YW-EW1R1**
Shape					
Housing Color	Blue/Black	Reddish Purple	Blue/Black	Reddish Purple	Reddish Purple/Blue
Push Rod Color	Black	Red	Black	Red	Gray
Terminal No.	3-4	1-2	1st tier: 13-14 2nd tier: 23-24	1st tier: 11-12 2nd tier: 21-22	1st tier: (NO) 13-14 2nd tier: (NC) 21-22
Weight (approx.)	11g		19g		

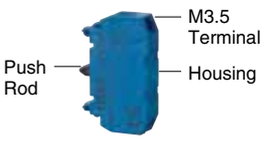

Single Contact Block
YW-E10R

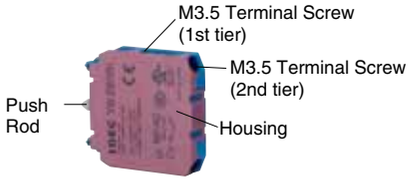

Double Contact Block
YW-EW1R1

Mounting Hole Layout

IEC 60947-5-1 compliant

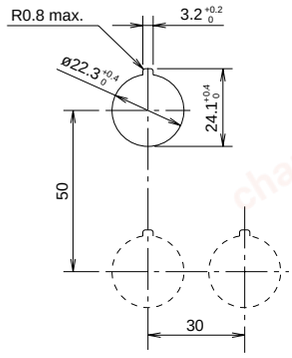

Note: Determine mounting centers to ensure easy operation.

chanhvinh.com

ø22 Flush Silhouette Switches CW3 Series

Part No. Development

Illuminated Pushbuttons

Note: Please use these charts to interpret the part numbers as all combinations are not possible to be created.

CW 1 L - M 1 E 10 Q4 ②

Bezel Color

Code	Bezel Color
1	Black
4	Metallic

Operation

Code	Operation
M	Momentary
A	Maintained

Shape

Code	Shape
1	Round Flush
2	Round Extended

Illumination Color

Code	Color	Code	Color
A	Amber	R	Red
G	Green	S	Blue
PW	Pure White	Y	Yellow

Rated Voltage

Code	Rated Voltage	Code	Rated Voltage
Q2	6V AC/DC	QH	100/120V AC
Q3	12V AC/DC	QM	200/220V AC
Q4	24V AC/DC	QM4	230/240V AC

Contact Configuration

Code	Contact Configuration	Code	Contact Configuration
10	1NO	20	2NO
01	1NC	02	2NC
11	1NO-1NC	22	2NO-2NC

Option

Code	Option	Part No. Example
W	White lens type (when light is off)	**CW1L-M1E10Q4W②**

- For white lens, clear lens is used instead of colored lens for amber, green, red, and blue illuminated pushbuttons. Amber, green, red, or blue LED units are used.

Pilot Lights

CW 1 P - 1 E Q4 ②

Bezel Color

Code	Bezel Color
1	Black
4	Metallic

Shape

Code	Shape
1	Round Flush
2	Round Extended

Illumination Color

Code	Color	Code	Color
A	Amber	R	Red
G	Green	S	Blue
PW	Pure White	Y	Yellow

Rated Voltage

Code	Rated Voltage	Code	Rated Voltage
Q2	6V AC/DC	QH	100/120V AC
Q3	12V AC/DC	QM	200/220V AC
Q4	24V AC/DC	QM4	230/240V AC

Option

Code	Option	Part No. Example
W	White lens type (when light is off)	**CW1P-1EQ4W②**

- For white lens, clear lens is used instead of colored lens for amber, green, red, and blue illuminated pushbuttons. Amber, green, red, or blue LED units are used.

Pushbuttons

CW 1 B - M 1 E 10 ①

Bezel Color

Code	Bezel Color
1	Black
4	Metallic

Operation

Code	Operation
M	Momentary
A	Maintained

Operation

Code	Shape
1	Round Flush
2	Round Extended

Button Color

Code	Color	Code	Color
A	Amber	R	Black
B	Black	S	Blue
G	Green	Y	Yellow

Contact Configuration

Code	Contact Configuration	Code	Contact Configuration
10	1NO	02	2NC
01	1NC	21	2NO-1NC
11	1NO-1NC	22	2NO-2NC
12	1NO-2NC	30	3NO
20	2NO	03	3NC

chanhvinh.com

Selector Switches

CW 1 S - 2 L E 10

Bezel Color

Code	Bezel Color
1	Black
4	Metallic

Contact Configuration

See page 12 and 13.

Operator

Code	Shape
Blank	Knob
L	Lever

Positions

2-position

Code	Position	Code	Positions
2	Maintained 	21	Spring return from right 

3-position

Code	Position	Code	Positions	Code	Position	Code	Positions
3	Maintained 	31	Spring return from right 	32	Spring return from left 	33	Spring return two-way 

Key Selector Switches

CW 1 K - 2 A E 10 - 1H

Bezel Color

Code	Bezel Color
1	Black
4	Metallic

Key

Code	Bezel Color
Blank	Standard
1H to 2H	Reversible Key
3H to 6H	Non-reversible Key

Positions

Code	Bezel Color
2	90° 2-position, maintained
21	90° 2-position, spring return from right
3	45° 3-position, maintained
31	45° 3-position, spring return from right
32	45° 3-position, spring return from left
33	45° 3-position, spring return two-way

Contact Configuration

See page 14 and 15.

Key Removal Position

2-position

Code	Position	Code	Positions	Code	Positions
A	Maintained 	B	Removable in left only 	C	Removable in right only 

Spring Return from right


❶❶❷: Key retained position

Note: The key cannot be removed in a spring return position.

3-position

Code	Position	Code	Positions	Code	Positions	Code	Positions
A	Maintained 	B	Removable in left and center 	C	Removable in right and center 	D	Removable in center only 
E	Maintained (removable in right and left) 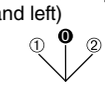	G	Removable in left only 	H	Removable in right only 		

❶❶❷: Key retained position

Spring Return from right	Spring Return from left	Spring Return two-way
		

Note: The key cannot be removed in a spring return position.

chanhvinh.com

ø22 Flush Silhouette Switches CW Series Illuminated Pushbuttons

Illuminated Pushbuttons

Package quantity: 1

Shape	Operation	Operating Voltage	Contact Configuration	Part No. Black Bezel	Part No. Metallic Bezel	Illumination Color Code ②
Round Flush CW□L-M1 CW□L-A1	Momentary	6V AC/DC	1NO	**CW1L-M1E10Q2②**	**CW4L-M1E10Q2②**	Specify an illumination color code in place of ② in the Part No. A: amber G: green PW: pure white R: red S: blue Y: yellow
			1NC	**CW1L-M1E01Q2②**	**CW4L-M1E01Q2②**	
			1NO-1NC	**CW1L-M1E11Q2②**	**CW4L-M1E11Q2②**	
			2NO	**CW1L-M1E20Q2②**	**CW4L-M1E20Q2②**	
			2NC	**CW1L-M1E02Q2②**	**CW4L-M1E02Q2②**	
			2NO-2NC	**CW1L-M1E22Q2②**	**CW4L-M1E22Q2②**	
		12V AC/DC	1NO	**CW1L-M1E10Q3②**	**CW4L-M1E10Q3②**	
			1NC	**CW1L-M1E01Q3②**	**CW4L-M1E01Q3②**	
			1NO-1NC	**CW1L-M1E11Q3②**	**CW4L-M1E11Q3②**	
			2NO	**CW1L-M1E20Q3②**	**CW4L-M1E20Q3②**	
			2NC	**CW1L-M1E02Q3②**	**CW4L-M1E02Q3②**	
			2NO-2NC	**CW1L-M1E22Q3②**	**CW4L-M1E22Q3②**	
		24V AC/DC	1NO	**CW1L-M1E10Q4②**	**CW4L-M1E10Q4②**	
			1NC	**CW1L-M1E01Q4②**	**CW4L-M1E01Q4②**	
			1NO-1NC	**CW1L-M1E11Q4②**	**CW4L-M1E11Q4②**	
			2NO	**CW1L-M1E20Q4②**	**CW4L-M1E20Q4②**	
			2NC	**CW1L-M1E02Q4②**	**CW4L-M1E02Q4②**	
			2NO-2NC	**CW1L-M1E22Q4②**	**CW4L-M1E22Q4②**	
		100/120V AC	1NO	**CW1L-M1E10QH②**	**CW4L-M1E10QH②**	
			1NC	**CW1L-M1E01QH②**	**CW4L-M1E01QH②**	
			1NO-1NC	**CW1L-M1E11QH②**	**CW4L-M1E11QH②**	
			2NO	**CW1L-M1E20QH②**	**CW4L-M1E20QH②**	
			2NC	**CW1L-M1E02QH②**	**CW4L-M1E02QH②**	
			2NO-2NC	**CW1L-M1E22QH②**	**CW4L-M1E22QH②**	
		200/220V AC	1NO	**CW1L-M1E10QM②**	**CW4L-M1E10QM②**	
			1NC	**CW1L-M1E01QM②**	**CW4L-M1E01QM②**	
			1NO-1NC	**CW1L-M1E11QM②**	**CW4L-M1E11QM②**	
			2NO	**CW1L-M1E20QM②**	**CW4L-M1E20QM②**	
			2NC	**CW1L-M1E02QM②**	**CW4L-M1E02QM②**	
			2NO-2NC	**CW1L-M1E22QM②**	**CW4L-M1E22QM②**	
		230/240V AC	1NO	**CW1L-M1E10QM4②**	**CW4L-M1E10QM4②**	
			1NC	**CW1L-M1E01QM4②**	**CW4L-M1E01QM4②**	
			1NO-1NC	**CW1L-M1E11QM4②**	**CW4L-M1E11QM4②**	
			2NO	**CW1L-M1E20QM4②**	**CW4L-M1E20QM4②**	
			2NC	**CW1L-M1E02QM4②**	**CW4L-M1E02QM4②**	
			2NO-2NC	**CW1L-M1E22QM4②**	**CW4L-M1E22QM4②**	
	Maintained	6V AC/DC	1NO	**CW1L-A1E10Q2②**	**CW4L-A1E10Q2②**	Specify an illumination color code in place of ② in the Part No. A: amber G: green PW: pure white R: red S: blue Y: yellow
			1NC	**CW1L-A1E01Q2②**	**CW4L-A1E01Q2②**	
			1NO-1NC	**CW1L-A1E11Q2②**	**CW4L-A1E11Q2②**	
			2NO	**CW1L-A1E20Q2②**	**CW4L-A1E20Q2②**	
			2NC	**CW1L-A1E02Q2②**	**CW4L-A1E02Q2②**	
			2NO-2NC	**CW1L-A1E22Q2②**	**CW4L-A1E22Q2②**	
		12V AC/DC	1NO	**CW1L-A1E10Q3②**	**CW4L-A1E10Q3②**	
			1NC	**CW1L-A1E01Q3②**	**CW4L-A1E01Q3②**	
			1NO-1NC	**CW1L-A1E11Q3②**	**CW4L-A1E11Q3②**	
			2NO	**CW1L-A1E20Q3②**	**CW4L-A1E20Q3②**	
			2NC	**CW1L-A1E02Q3②**	**CW4L-A1E02Q3②**	
			2NO-2NC	**CW1L-A1E22Q3②**	**CW4L-A1E22Q3②**	
		24V AC/DC	1NO	**CW1L-A1E10Q4②**	**CW4L-A1E10Q4②**	
			1NC	**CW1L-A1E01Q4②**	**CW4L-A1E01Q4②**	
			1NO-1NC	**CW1L-A1E11Q4②**	**CW4L-A1E11Q4②**	
			2NO	**CW1L-A1E20Q4②**	**CW4L-A1E20Q4②**	
			2NC	**CW1L-A1E02Q4②**	**CW4L-A1E02Q4②**	
			2NO-2NC	**CW1L-A1E22Q4②**	**CW4L-A1E22Q4②**	
		100/120V AC	1NO	**CW1L-A1E10QH②**	**CW4L-A1E10QH②**	
			1NC	**CW1L-A1E01QH②**	**CW4L-A1E01QH②**	
			1NO-1NC	**CW1L-A1E11QH②**	**CW4L-A1E11QH②**	
			2NO	**CW1L-A1E20QH②**	**CW4L-A1E20QH②**	
			2NC	**CW1L-A1E02QH②**	**CW4L-A1E02QH②**	
			2NO-2NC	**CW1L-A1E22QH②**	**CW4L-A1E22QH②**	
		200/220V AC	1NO	**CW1L-A1E10QM②**	**CW4L-A1E10QM②**	
			1NC	**CW1L-A1E01QM②**	**CW4L-A1E01QM②**	
			1NO-1NC	**CW1L-A1E11QM②**	**CW4L-A1E11QM②**	
			2NO	**CW1L-A1E20QM②**	**CW4L-A1E20QM②**	
			2NC	**CW1L-A1E02QM②**	**CW4L-A1E02QM②**	
			2NO-2NC	**CW1L-A1E22QM②**	**CW4L-A1E22QM②**	
		230/240V AC	1NO	**CW1L-A1E10QM4②**	**CW4L-A1E10QM4②**	
			1NC	**CW1L-A1E01QM4②**	**CW4L-A1E01QM4②**	
			1NO-1NC	**CW1L-A1E11QM4②**	**CW4L-A1E11QM4②**	
			2NO	**CW1L-A1E20QM4②**	**CW4L-A1E20QM4②**	
			2NC	**CW1L-A1E02QM4②**	**CW4L-A1E02QM4②**	
			2NO-2NC	**CW1L-A1E22QM4②**	**CW4L-A1E22QM4②**	



(black bezel)



(metallic bezel)

- See page 21 for replacement LED modules.
- Marking film can be inserted to indicate legends. See page 23.
- See page 16 for dimensions.
- White lens type (when light is off) are available. Clear lens is used instead of colored lens for amber, green, red, and blue illuminated pushbuttons. Amber, green, red, or blue LED units are used. To specify, add W before the color code in Part No.
  Example:
  CW1L-M1E10Q2WR
- A dummy block is installed when one contact block is used.

chanhvinh.com

Flush Silhouette Switches CW Series Illuminated Pushbuttons ø22

Illuminated Pushbuttons

Package quantity: 1

Shape	Operation	Operating Voltage	Contact Configuration	Part No. Black Bezel	Part No. Metallic Bezel	Illumination Color Code ②
Round Extended CW□L-M2 CW□L-A2	Momentary	6V AC/DC	1NO	**CW1L-M2E10Q2②**	**CW4L-M2E10Q2②**	Specify an illumination color code in place of ② in the Part No. A: amber G: green PW: pure white R: red S: blue Y: yellow
			1NC	**CW1L-M2E01Q2②**	**CW4L-M2E01Q2②**	
			1NO-1NC	**CW1L-M2E11Q2②**	**CW4L-M2E11Q2②**	
			2NO	**CW1L-M2E20Q2②**	**CW4L-M2E20Q2②**	
			2NC	**CW1L-M2E02Q2②**	**CW4L-M2E02Q2②**	
			2NO-2NC	**CW1L-M2E22Q2②**	**CW4L-M2E22Q2②**	
		12V AC/DC	1NO	**CW1L-M2E10Q3②**	**CW4L-M2E10Q3②**	
			1NC	**CW1L-M2E01Q3②**	**CW4L-M2E01Q3②**	
			1NO-1NC	**CW1L-M2E11Q3②**	**CW4L-M2E11Q3②**	
			2NO	**CW1L-M2E20Q3②**	**CW4L-M2E20Q3②**	
			2NC	**CW1L-M2E02Q3②**	**CW4L-M2E02Q3②**	
			2NO-2NC	**CW1L-M2E22Q3②**	**CW4L-M2E22Q3②**	
		24V AC/DC	1NO	**CW1L-M2E10Q4②**	**CW4L-M2E10Q4②**	
			1NC	**CW1L-M2E01Q4②**	**CW4L-M2E01Q4②**	
			1NO-1NC	**CW1L-M2E11Q4②**	**CW4L-M2E11Q4②**	
			2NO	**CW1L-M2E20Q4②**	**CW4L-M2E20Q4②**	
			2NC	**CW1L-M2E02Q4②**	**CW4L-M2E02Q4②**	
			2NO-2NC	**CW1L-M2E22Q4②**	**CW4L-M2E22Q4②**	
		100/120V AC	1NO	**CW1L-M2E10QH②**	**CW4L-M2E10QH②**	
			1NC	**CW1L-M2E01QH②**	**CW4L-M2E01QH②**	
			1NO-1NC	**CW1L-M2E11QH②**	**CW4L-M2E11QH②**	
			2NO	**CW1L-M2E20QH②**	**CW4L-M2E20QH②**	
			2NC	**CW1L-M2E02QH②**	**CW4L-M2E02QH②**	
			2NO-2NC	**CW1L-M2E22QH②**	**CW4L-M2E22QH②**	
		200/220V AC	1NO	**CW1L-M2E10QM②**	**CW4L-M2E10QM②**	
			1NC	**CW1L-M2E01QM②**	**CW4L-M2E01QM②**	
			1NO-1NC	**CW1L-M2E11QM②**	**CW4L-M2E11QM②**	
			2NO	**CW1L-M2E20QM②**	**CW4L-M2E20QM②**	
			2NC	**CW1L-M2E02QM②**	**CW4L-M2E02QM②**	
			2NO-2NC	**CW1L-M2E22QM②**	**CW4L-M2E22QM②**	
		230/240V AC	1NO	**CW1L-M2E10QM4②**	**CW4L-M2E10QM4②**	
			1NC	**CW1L-M2E01QM4②**	**CW4L-M2E01QM4②**	
			1NO-1NC	**CW1L-M2E11QM4②**	**CW4L-M2E11QM4②**	
			2NO	**CW1L-M2E20QM4②**	**CW4L-M2E20QM4②**	
			2NC	**CW1L-M2E02QM4②**	**CW4L-M2E02QM4②**	
			2NO-2NC	**CW1L-M2E22QM4②**	**CW4L-M2E22QM4②**	
	Maintained	6V AC/DC	1NO	**CW1L-A2E10Q2②**	**CW4L-A2E10Q2②**	Specify an illumination color code in place of ② in the Part No. A: amber G: green PW: pure white R: red S: blue Y: yellow
			1NC	**CW1L-A2E01Q2②**	**CW4L-A2E01Q2②**	
			1NO-1NC	**CW1L-A2E11Q2②**	**CW4L-A2E11Q2②**	
			2NO	**CW1L-A2E20Q2②**	**CW4L-A2E20Q2②**	
			2NC	**CW1L-A2E02Q2②**	**CW4L-A2E02Q2②**	
			2NO-2NC	**CW1L-A2E22Q2②**	**CW4L-A2E22Q2②**	
		12V AC/DC	1NO	**CW1L-A2E10Q3②**	**CW4L-A2E10Q3②**	
			1NC	**CW1L-A2E01Q3②**	**CW4L-A2E01Q3②**	
			1NO-1NC	**CW1L-A2E11Q3②**	**CW4L-A2E11Q3②**	
			2NO	**CW1L-A2E20Q3②**	**CW4L-A2E20Q3②**	
			2NC	**CW1L-A2E02Q3②**	**CW4L-A2E02Q3②**	
			2NO-2NC	**CW1L-A2E22Q3②**	**CW4L-A2E22Q3②**	
		24V AC/DC	1NO	**CW1L-A2E10Q4②**	**CW4L-A2E10Q4②**	
			1NC	**CW1L-A2E01Q4②**	**CW4L-A2E01Q4②**	
			1NO-1NC	**CW1L-A2E11Q4②**	**CW4L-A2E11Q4②**	
			2NO	**CW1L-A2E20Q4②**	**CW4L-A2E20Q4②**	
			2NC	**CW1L-A2E02Q4②**	**CW4L-A2E02Q4②**	
			2NO-2NC	**CW1L-A2E22Q4②**	**CW4L-A2E22Q4②**	
		100/120V AC	1NO	**CW1L-A2E10QH②**	**CW4L-A2E10QH②**	
			1NC	**CW1L-A2E01QH②**	**CW4L-A2E01QH②**	
			1NO-1NC	**CW1L-A2E11QH②**	**CW4L-A2E11QH②**	
			2NO	**CW1L-A2E20QH②**	**CW4L-A2E20QH②**	
			2NC	**CW1L-A2E02QH②**	**CW4L-A2E02QH②**	
			2NO-2NC	**CW1L-A2E22QH②**	**CW4L-A2E22QH②**	
		200/220V AC	1NO	**CW1L-A2E10QM②**	**CW4L-A2E10QM②**	
			1NC	**CW1L-A2E01QM②**	**CW4L-A2E01QM②**	
			1NO-1NC	**CW1L-A2E11QM②**	**CW4L-A2E11QM②**	
			2NO	**CW1L-A2E20QM②**	**CW4L-A2E20QM②**	
			2NC	**CW1L-A2E02QM②**	**CW4L-A2E02QM②**	
			2NO-2NC	**CW1L-A2E22QM②**	**CW4L-A2E22QM②**	
		230/240V AC	1NO	**CW1L-A2E10QM4②**	**CW4L-A2E10QM4②**	
			1NC	**CW1L-A2E01QM4②**	**CW4L-A2E01QM4②**	
			1NO-1NC	**CW1L-A2E11QM4②**	**CW4L-A2E11QM4②**	
			2NO	**CW1L-A2E20QM4②**	**CW4L-A2E20QM4②**	
			2NC	**CW1L-A2E02QM4②**	**CW4L-A2E02QM4②**	
			2NO-2NC	**CW1L-A2E22QM4②**	**CW4L-A2E22QM4②**	



(black bezel)



(metallic bezel)

- See page 21 for replacement LED modules.
- Marking film can be inserted to indicate legends. See page 23.
- See page 16 for dimensions.
- White lens type (when light is off) are available. Clear lens is used instead of colored lens for amber, green, red, and blue illuminated pushbuttons. Amber, green, red, or blue LED units are used. To specify, add W before the color code in Part Number.
  Example:
  CW1L-M2E10Q2WR
- A dummy block is installed when one contact block is used.

chanhvinh.com

ø22 Flush Silhouette Switches CW Series Pilot Lights

Pilot Lights

Package quantity: 1

Shape	Operating Voltage	Part No.		Illumination Color Code ②
		Black Bezel	Metallic Bezel	
Round Flush CW□P-1  (black bezel)  (metallic bezel) c UL us LISTED CE	6V AC/DC	**CW1P-1EQ2②**	**CW4P-1EQ2②**	A: amber G: green PW: pure white R: red S: blue Y: yellow
	12V AC/DC	**CW1P-1EQ3②**	**CW4P-1EQ3②**	
	24V AC/DC	**CW1P-1EQ4②**	**CW4P-1EQ4②**	
	100/120V AC	**CW1P-1EQH②**	**CW4P-1EQH②**	
	200/220V AC	**CW1P-1EQM②**	**CW4P-1EQM②**	
	230/240V AC	**CW1P-1EQM4②**	**CW4P-1EQM4②**	
Round Extended CW□P-2  (black bezel)  (metallic bezel) c UL us LISTED CE	6V AC/DC	**CW1P-2EQ2②**	**CW4P-2EQ2②**	A: amber G: green PW: pure white R: red S: blue Y: yellow
	12V AC/DC	**CW1P-2EQ3②**	**CW4P-2EQ3②**	
	24V AC/DC	**CW1P-2EQ4②**	**CW4P-2EQ4②**	
	100/120V AC	**CW1P-2EQH②**	**CW4P-2EQH②**	
	200/220V AC	**CW1P-2EQM②**	**CW4P-2EQM②**	
	230/240V AC	**CW1P-2EQM4②**	**CW4P-2EQM4②**	

- Specify an illumination color code in place of ② in the Part No.
- See page 16 for dimensions.
- See page 21 for replacement LED modules.
- Two dummy blocks are installed.

chanhvinh.com

Pushbuttons

Package quantity: 1

Shape	Operation	Contact Configuration	Part No.		Button Color Code ①
			Black Bezel	Metallic Bezel	
Round Flush CW□B-M1 CW□B-A1  (black bezel)  (metallic bezel) cULus LISTED CE	Momentary	1NO	**CW1B-M1E10①**	**CW4B-M1E10①**	B: black G: green R: red S: blue W: white Y: yellow
		1NC	**CW1B-M1E01①**	**CW4B-M1E01①**	
		1NO-1NC	**CW1B-M1E11①**	**CW4B-M1E11①**	
		2NO	**CW1B-M1E20①**	**CW4B-M1E20①**	
		2NC	**CW1B-M1E02①**	**CW4B-M1E02①**	
		2NO-1NC	**CW1B-M1E21①**	**CW4B-M1E21①**	
		1NO-2NC	**CW1B-M1E12①**	**CW4B-M1E12①**	
		3NO	**CW1B-M1E30①**	**CW4B-M1E30①**	
		3NC	**CW1B-M1E03①**	**CW4B-M1E03①**	
		2NO-2NC	**CW1B-M1E22①**	**CW4B-M1E22①**	
	Maintained	1NO	**CW1B-A1E10①**	**CW4B-A1E10①**	B: black G: green R: red S: blue W: white Y: yellow
		1NC	**CW1B-A1E01①**	**CW4B-A1E01①**	
		1NO-1NC	**CW1B-A1E11①**	**CW4B-A1E11①**	
		2NO	**CW1B-A1E20①**	**CW4B-A1E20①**	
		2NC	**CW1B-A1E02①**	**CW4B-A1E02①**	
		2NO-1NC	**CW1B-A1E21①**	**CW4B-A1E21①**	
		1NO-2NC	**CW1B-A1E12①**	**CW4B-A1E12①**	
		3NO	**CW1B-A1E30①**	**CW4B-A1E30①**	
		3NC	**CW1B-A1E03①**	**CW4B-A1E03①**	
		2NO-2NC	**CW1B-A1E22①**	**CW4B-A1E22①**	
Round Extended CW□B-M2 CW□B-A2  (black bezel)  (metallic bezel) cULus LISTED CE	Momentary	1NO	**CW1B-M2E10①**	**CW4B-M2E10①**	B: black G: green R: red S: blue W: white Y: yellow
		1NC	**CW1B-M2E01①**	**CW4B-M2E01①**	
		1NO-1NC	**CW1B-M2E11①**	**CW4B-M2E11①**	
		2NO	**CW1B-M2E20①**	**CW4B-M2E20①**	
		2NC	**CW1B-M2E02①**	**CW4B-M2E02①**	
		2NO-1NC	**CW1B-M2E21①**	**CW4B-M2E21①**	
		1NO-2NC	**CW1B-M2E12①**	**CW4B-M2E12①**	
		3NO	**CW1B-M2E30①**	**CW4B-M2E30①**	
		3NC	**CW1B-M2E03①**	**CW4B-M2E03①**	
		2NO-2NC	**CW1B-M2E22①**	**CW4B-M2E22①**	
	Maintained	1NO	**CW1B-A2E10①**	**CW4B-A2E10①**	B: black G: green R: red S: blue W: white Y: yellow
		1NC	**CW1B-A2E01①**	**CW4B-A2E01①**	
		1NO-1NC	**CW1B-A2E11①**	**CW4B-A2E11①**	
		2NO	**CW1B-A2E20①**	**CW4B-A2E20①**	
		2NC	**CW1B-A2E02①**	**CW4B-A2E02①**	
		2NO-1NC	**CW1B-A2E21①**	**CW4B-A2E21①**	
		1NO-2NC	**CW1B-A2E12①**	**CW4B-A2E12①**	
		3NO	**CW1B-A2E30①**	**CW4B-A2E30①**	
		3NC	**CW1B-A2E03①**	**CW4B-A2E03①**	
		2NO-2NC	**CW1B-A2E22①**	**CW4B-A2E22①**	

- Specify a button color code in place of ① in the Part No.
- See page 17 for dimensions.
- Two or one dummy block is installed when one or two contact blocks are used, respectively.

chanhvinh.com

ø22 Flush Silhouette Switches CW Series Selector Switches

Selector Switches

Package quantity: 1

Shape	CW□S (Knob Operator)  (black bezel)  (metallic bezel)						
No. of Positions	Contact Configuration (Code)	Contact Block		Operator Position		L R Maintained	L R Spring return from right
		Mounting Position	Contact	L	R		
90° 2-position	1NO (10)	1	NO		●	CW□S-2E10	CW□S-21E10
		2	—	Dummy			
		3	—	Dummy			
	1NC (01)	1	—	Dummy		CW□S-2E01	CW□S-21E01
		2	—	Dummy			
		3	NC	●			
	1NO-1NC (11)	1	NO		●	CW□S-2E11	CW□S-21E11
		2	—	Dummy			
		3	NC	●			
	2NO (20)	1	NO		●	CW□S-2E20	CW□S-21E20
		2	—	Dummy			
		3	NO		●		
	2NC (02)	1	NC	●		CW□S-2E02	CW□S-21E02
		2	—	Dummy			
		3	NC	●			
	2NO-1NC (21)	1	NO		●	CW□S-2E21	CW□S-21E21
		2	NO		●		
		3	NC	●			
	1NO-2NC (12)	1	NO		●	CW□S-2E12	CW□S-21E12
		2	NC	●			
		3	NC	●			
	3NO (30)	1	NO		●	CW□S-2E30	CW□S-21E30
		2	NO		●		
		3	NO		●		
	3NC (03)	1	NC	●		CW□S-2E03	CW□S-21E03
		2	NC	●			
		3	NC	●			
	2NO-2NC (22)	1	NO/NC NO		●	CW□S-2E22	CW□S-21E22
			NO/NC NC	●			
		2	—	Dummy			
		3	NO/NC NO		●		
			NO/NC NC	●			
	4NO (40)	1	2NO NO		●	CW□S-21E40	CW□S-21E40
			2NO NO		●		
		2	—	Dummy			
		3	2NO NO		●		
			2NO NO		●		

- Specify a bezel color code in place of □ in the Part No.: 1 (black bezel), 4 (metallic bezel)
- Lever operator is also available. For dimensions, see page 18.
- When ordering a lever operator selector switch, designate **L** before **E** in the Part No. of knob operator selector switches.

[Example] **CW1S-2E10** → **CW1S-2LE10**

Knob Operator Lever Operator

Lever Operator



CW1S-∗LE (black bezel)



CW4S-∗LE (metallic bezel)

Contact Block Mounting Position

1 2 3



chanhvinh.com

Flush Silhouette Switches CW Series Selector Switches ø22

Package quantity: 1

No. of Positions	Contact Configuration (Code)	Contact Block: Mounting Position	Contact Block: Contact	Operator Position: L	C	R	Maintained	Spring return from right	Spring return from left	Spring return two-way
45° 3-position	1NO-1NC (11)	1	NO	●			CW□S-3E11	CW□S-31E11	CW□S-32E11	CW□S-33E11
		2	—	Dummy						
		3	NC	▬						
	1NO-1NC (11N1)	1	NC		▬		CW□S-3E11N1	CW□S-31E11N1	CW□S-32E11N1	CW□S-33E11N1
		2	—	Dummy						
		3	NO			●				
	1NO-1NC (11N2)	1	NO	●			CW□S-3E11N2	CW□S-31E11N2	CW□S-32E11N2	CW□S-33E11N2
		2	NC		●					
		3	—	Dummy						
	1NO-1NC (11N3)	1	—	Dummy			CW□S-3E11N3	CW□S-31E11N3	CW□S-32E11N3	CW□S-33E11N3
		2	NC		●					
		3	NO			●				
	1NO-1NC (11N4)	1	—	Dummy			CW□S-3E11N4	CW□S-31E11N4	CW□S-32E11N4	CW□S-33E11N4
		2	NO	●		●				
		3	NC	▬						
	2NO (20)	1	NO	●			CW□S-3E20	CW□S-31E20	CW□S-32E20	CW□S-33E20
		2	—	Dummy						
		3	NO			●				
	2NO (20N1)	1	—	Dummy			CW□S-3E20N1	CW□S-31E20N1	CW□S-32E20N1	CW□S-33E20N1
		2	NO	●		●				
		3	NO			●				
	2NC (02)	1	NC		▬		CW□S-3E02	CW□S-31E02	CW□S-32E02	CW□S-33E02
		2	—	Dummy						
		3	NC	▬						
	2NC (02N1)	1	—	Dummy			CW□S-3E02N1	CW□S-31E02N1	CW□S-32E02N1	CW□S-33E02N1
		2	NC		●					
		3	NC	▬						
	2NO-1NC (21)	1	NO	●			CW□S-3E21	CW□S-31E21	CW□S-32E21	CW□S-33E21
		2	NO	●		●				
		3	NC	▬						
	2NO-1NC (21N1)	1	NO	●			CW□S-3E21N1	CW□S-31E21N1	CW□S-32E21N1	CW□S-33E21N1
		2	NC		●					
		3	NO			●				
	1NO-2NC (12)	1	NO	●			CW□S-3E12	CW□S-31E12	CW□S-32E12	CW□S-33E12
		2	NC		●					
		3	NC	▬						
	1NO-2NC (12N1)	1	NC		▬		CW□S-3E12N1	CW□S-31E12N1	CW□S-32E12N1	CW□S-33E12N1
		2	NO	●		●				
		3	NC	▬						
	3NO (30)	1	NO	●			CW□S-3E30	CW□S-31E30	CW□S-32E30	CW□S-33E30
		2	NO	●		●				
		3	NO			●				
	3NC (03)	1	NC		▬		CW□S-3E03	CW□S-31E03	CW□S-32E03	CW□S-33E03
		2	NC		●					
		3	NC	▬						
	2NO-2NC (22)	1	NO/NC: NO	●			CW□S-3E22	CW□S-31E22	CW□S-32E22	CW□S-33E22
			NC		▬					
		2	—	Dummy						
		3	NO/NC: NO			●				
			NC	▬						
	4NO (40)	1	2NO: NO	●			CW□S-3E40	CW□S-31E40	CW□S-32E40	CW□S-33E40
			NO	●						
		2	—	Dummy						
		3	2NO: NO			●				
			NO			●				
	2NO-2NC (22N2)	1	2NC: NC		▬		CW□S-3E22N2	CW□S-31E22N2	CW□S-32E22N2	CW□S-33E22N2
			NC		▬					
		2	—	Dummy						
		3	2NO: NC			●				
			NC			●				

• Specify a bezel color code in place of □ in the Part No.: 1 (black bezel), 4 (metallic bezel) • For the contact block mounting position, see page 12.
• Lever operator is also available. For dimensions, see page 18.
• When ordering a lever operator selector switch, designate **L** before **E** in the Part No. of knob operator selector switches.
[Example] **CW1S-3E11** → **CW1S-3LE11**
Knob Operator Lever Operator

ø22 Flush Silhouette Switches CW Series Key Selector Switches

Key Selector Switches

Package quantity: 1

Shape	CW□K  (black bezel)  (metallic bezel)						
No. of Positions	Contact Configuration (Code)	Contact Block		Operator Position		L R Maintained	L R Spring return from right
		Mounting Position	Contact	L	R		
90° 2-position	1NO (10)	1	NO		I	CW□K-2AE10	CW□K-21BE10
		2	—	Dummy			
		3	—	Dummy			
	1NC (01)	1	—	Dummy		CW□K-2AE01	CW□K-21BE01
		2	—	Dummy			
		3	NC	●			
	1NO-1NC (11)	1	NO		●	CW□K-2AE11	CW□K-21BE11
		2	—	Dummy			
		3	NC	●			
	2NO (20)	1	NO		●	CW□K-2AE20	CW□K-21BE20
		2	—	Dummy			
		3	NO		●		
	2NC (02)	1	NC	●		CW□K-2AE02	CW□K-21BE02
		2	—	Dummy			
		3	NC	●			
	2NO-1NC (21)	1	NO		●	CW□K-2AE21	CW□K-21BE21
		2	NO		●		
		3	NC	●			
	1NO-2NC (12)	1	NO		●	CW□K-2AE12	CW□K-21BE12
		2	NC	●			
		3	NC	●			
	3NO (30)	1	NO		●	CW□K-2AE30	CW□K-21BE30
		2	NO		●		
		3	NO		●		
	3NC (03)	1	NC	●		CW□K-2AE03	CW□K-21BE03
		2	NC	●			
		3	NC	●			
	2NO-2NC (22)	1	NO/NC NO		●	CW□K-2AE22	CW□K-21BE22
			NC	●			
		2	—	Dummy			
		3	NO/NC NO		●		
			NC	●			
	4NO (40)	1	2NO NO		●	CW□K-2AE40	CW□K-21BE40
			NO		●		
		2	—	Dummy			
		3	2NO NO		●		
			NO		●		

- Specify a bezel color code in place of □ in the Part No.: 1 (black bezel), 4 (metallic bezel)
- On the spring-returned types, the key can be released only from the maintained position. On the maintained types, the key can be released from every position. Key retained positions are also available. See below.
- Two keys are supplied. • Key cylinder material: Metal
- Besides the standard key (key number 0H), six other keys are also available. See below.
- For the contact block mounting position, see page 12. • For dimensions, see page 19.
- When ordering an optional key or optional key retained positions, specify designation codes as shown below:

[Example] **CW1K-2AE10-1H**

(blank): Standard key (0H, reversible)
1H to 2H: Reversible key
3H to 6H: Non-reversible key

Note:
Key number is indicated on the key cylinder.
Standard keys do not have a key number indication.

Key removal position code

2-position
A: Removable in all positions
B: Removable in left only
C: Removable in right only

3-position
A: Removable in all positions
B: Removable in left and center
C: Removable in right and center
D: Removable in center only
E: Removable in right and left
G: Removable in left only
H: Removable in right only

Note: Key is retained in the spring-returned position.

chanhvinh.com

Flush Silhouette Switches CW Series Key Selector Switches ø22

Package quantity: 1

No. of Positions	Contact Configuration	Contact Block			Operator Position			Maintained	Spring return from right	Spring return from left	Spring return two-way
		Mounting Position	Contact		L	C	R				
45° 3-position	1NO-1NC (11)	1	NO		●			CW□K-3AE11	CW□K-31BE11	CW□K-32CE11	CW□K-33DE11
		2	—		Dummy						
		3	NC		▬						
	1NO-1NC (11N1)	1	NC			▬		CW□K-3AE11N1	CW□K-31BE11N1	CW□K-32CE11N1	CW□K-33DE11N1
		2	—		Dummy						
		3	NO				●				
	1NO-1NC (11N2)	1	NO		●			CW□K-3AE11N2	CW□K-31BE11N2	CW□K-32CE11N2	CW□K-33DE11N2
		2	NC			●					
		3	—		Dummy						
	1NO-1NC (11N3)	1	—		Dummy			CW□K-3AE11N3	CW□K-31BE11N3	CW□K-32CE11N3	CW□K-33DE11N3
		2	NC			●					
		3	NO				●				
	1NO-1NC (11N4)	1	—		Dummy			CW□K-3AE11N4	CW□K-31BE11N4	CW□K-32CE11N4	CW□K-33DE11N4
		2	NO		●		●				
		3	NC		▬						
	2NO (20)	1	NO		●			CW□K-3AE20	CW□K-31BE20	CW□K-32CE20	CW□K-33DE20
		2	—		Dummy						
		3	NO				●				
	2NO (20N1)	1	—		Dummy			CW□K-3AE20N1	CW□K-31BE20N1	CW□K-32CE20N1	CW□K-33DE20N1
		2	NO		●		●				
		3	NO				●				
	2NC (02)	1	NC			▬		CW□K-3AE02	CW□K-31BE02	CW□K-32CE02	CW□K-33DE02
		2	—		Dummy						
		3	NC		▬						
	2NC (02N1)	1	—		Dummy			CW□K-3AE02N1	CW□K-31BE02N1	CW□K-32CE02N1	CW□K-33DE02N1
		2	NC			●					
		3	NC		▬						
	2NO-1NC (21)	1	NO		●			CW□K-3AE21	CW□K-31BE21	CW□K-32CE21	CW□K-33DE21
		2	NO		●		●				
		3	NC		▬						
	2NO-1NC (21N1)	1	NO		●			CW□K-3AE21N1	CW□K-31BE21N1	CW□K-32CE21N1	CW□K-33DE21N1
		2	NC			●					
		3	NO				●				
	1NO-2NC (12)	1	NO		●			CW□K-3AE12	CW□K-31BE12	CW□K-32CE12	CW□K-33DE12
		2	NC			●					
		3	NC		▬						
	1NO-2NC (12N1)	1	NC			▬		CW□K-3AE12N1	CW□K-31BE12N1	CW□K-32CE12N1	CW□K-33DE12N1
		2	NO		●		●				
		3	NC		▬						
	3NO (30)	1	NO		●			CW□K-3AE30	CW□K-31BE30	CW□K-32CE30	CW□K-33DE30
		2	NO		●		●				
		3	NO				●				
	3NC (03)	1	NC			▬		CW□K-3AE03	CW□K-31BE03	CW□K-32CE03	CW□K-33DE03
		2	NC			●					
		3	NC		▬						
	2NO-2NC (22)	1	NO/NC	NO	●			CW□K-3AE22	CW□K-31BE22	CW□K-32CE22	CW□K-33DE22
				NC		▬					
		2	—		Dummy						
		3	NO/NC	NO			●				
				NC	▬						
	4NO (40)	1	2NO	NO	●			CW□K-3AE40	CW□K-31BE40	CW□K-32CE40	CW□K-33DE40
				NO	●						
		2	—		Dummy						
		3	2NO	NO			●				
				NO			●				
	2NO-2NC (22N2)	1	2NC	NC		▬		CW□K-3AE22N2	CW□K-31BE22N2	CW□K-32CE22N2	CW□K-33DE22N2
				NC		▬					
		2	—		Dummy						
		3	2NO	NO			●				
				NO			●				

- Specify a bezel color code in place of □ in the Part No.: 1 (black bezel), 4 (metallic bezel)
- On the spring-returned types, the key can be released only from the maintained position. On the maintained types, the key can be released from every position. Key retained positions are also available. See page 14.
- Two keys are supplied. • Key cylinder material: Metal
- Besides the standard key (key number 0H), six other keys are also available. See page 14.
- For the contact block mounting position, see right.
- For dimensions, see page 19.

Contact Block Mounting Position



chanhvinh.com

ø22 Flush Silhouette Switches CW Series Dimensions

Illuminated Pushbuttons

All dimensions in mm.

See page 5 for mounting hole layout.

1 to 2 contacts

Round Flush

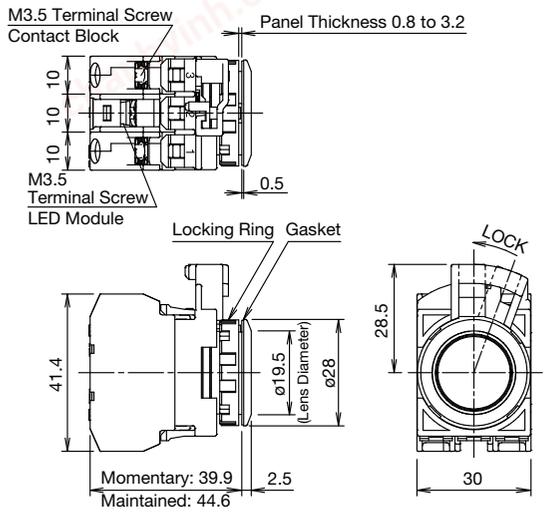

Round Extended

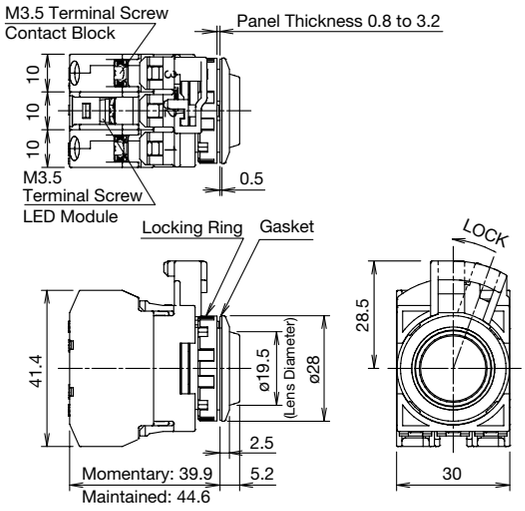

4 contacts

Round Flush

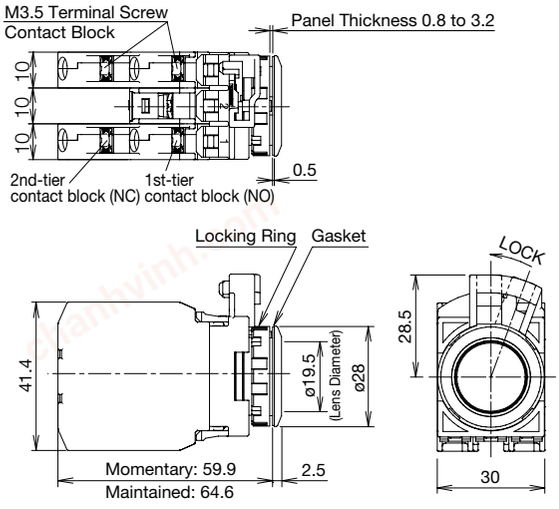

Round Extended

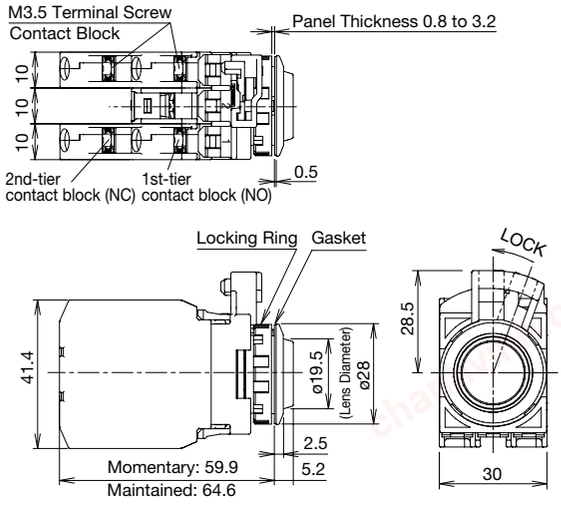

Pilot Lights

Round Flush

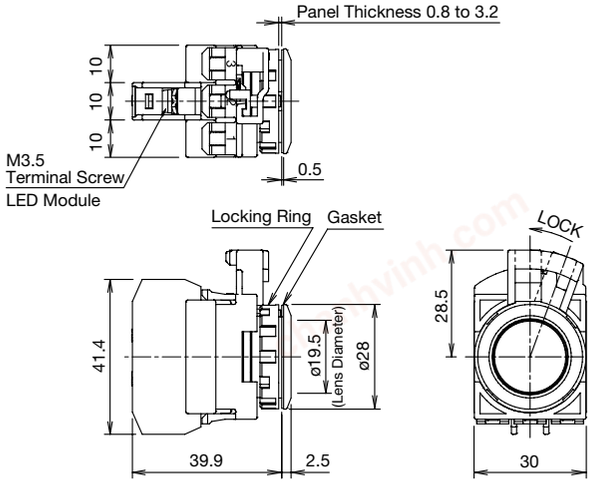

Round Extended

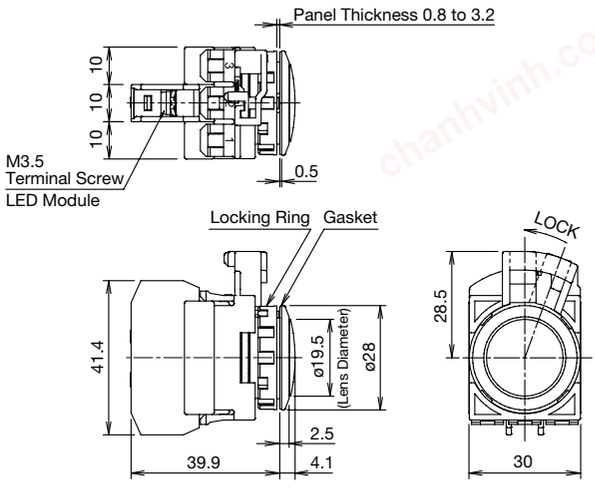

chanhvinh.com

Pushbuttons

All dimensions in mm.

See page 5 for mounting hole layout.

1 to 3 contacts

Round Flush

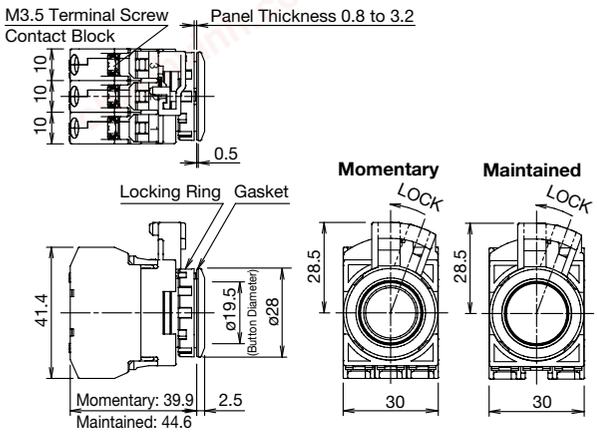

Round Extended

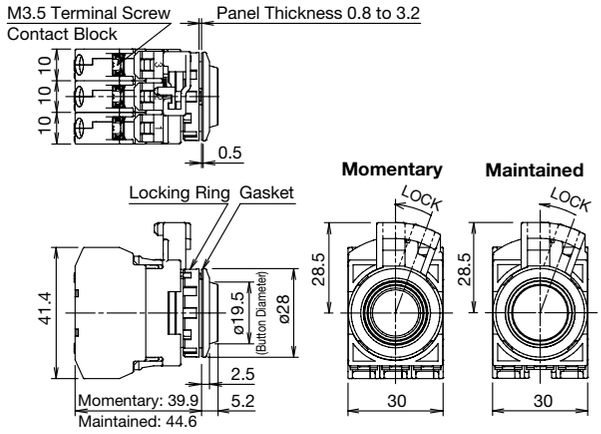

4 contacts

Round Flush

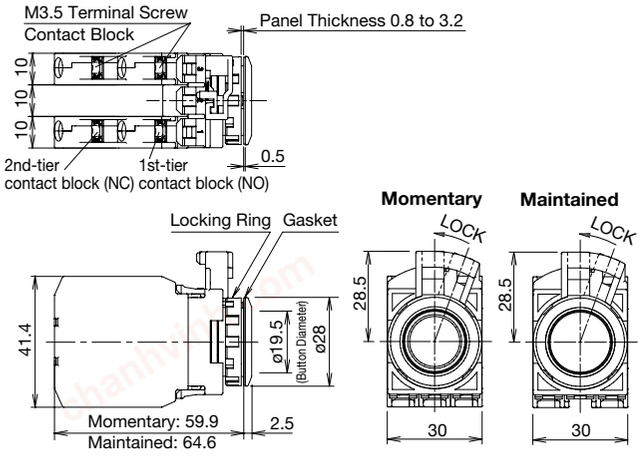

Round Extended

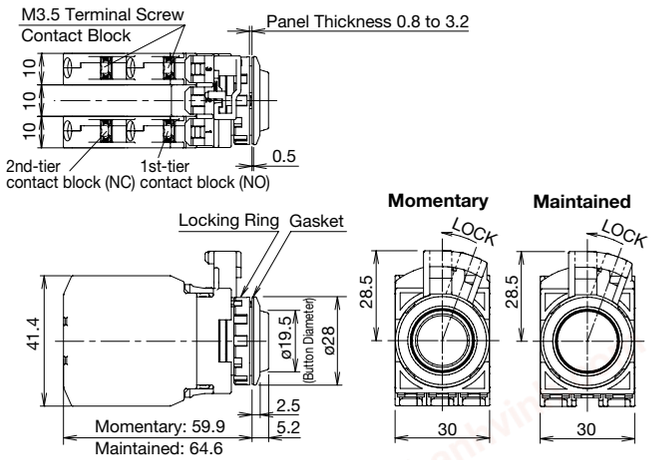

chanhvinh.com

ø22 Flush Silhouette Switches CW Series Dimensions

Selector Switches

All dimensions in mm.

See page 5 for mounting hole layout.

1 to 3 contacts

Knob Operator

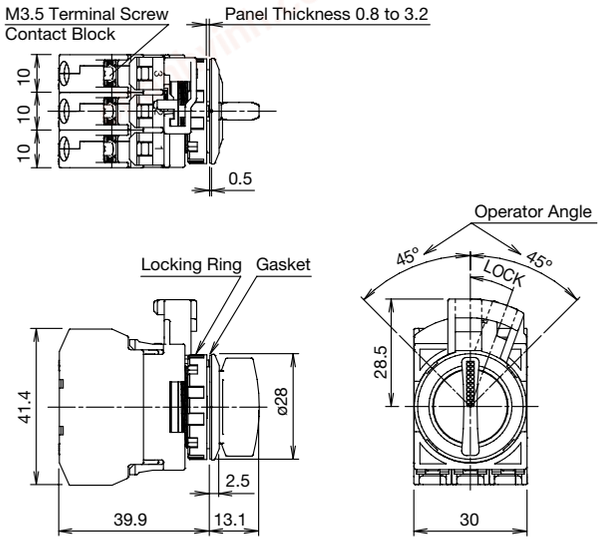

Lever Operator

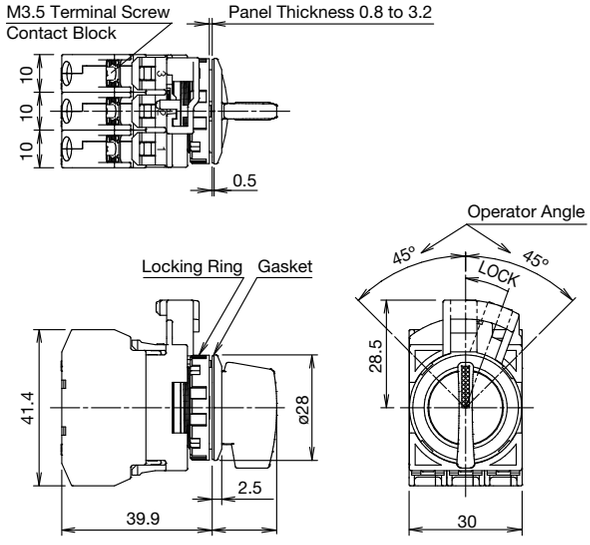

4 contacts

Knob Operator

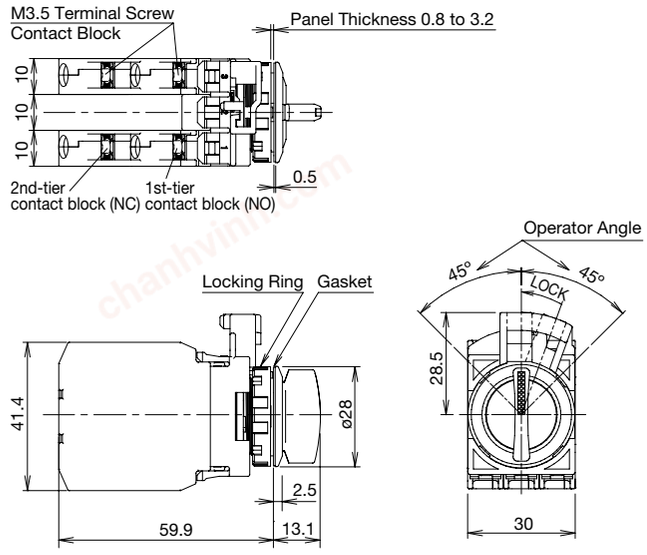

Lever Operator

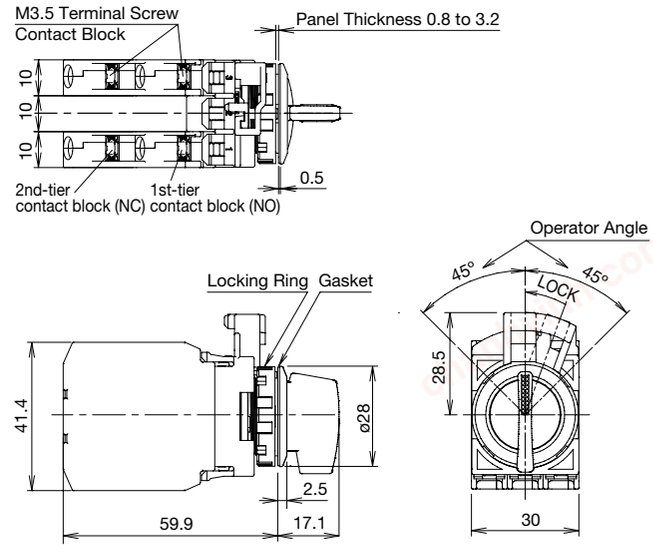

chanhvinh.com

All dimensions in mm.

Key Selector Switches

1 to 3 contacts

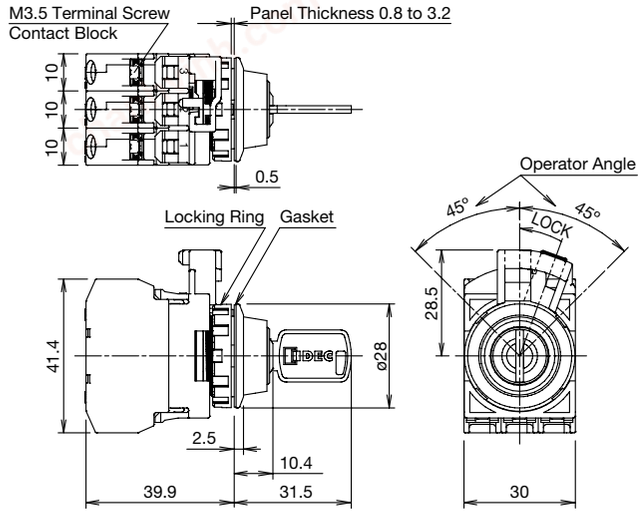

Key No: 0H to 2H (reversible key)

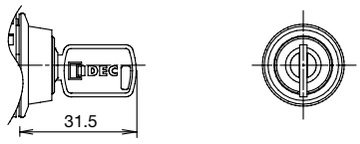

Key No: 3H to 6H (non-reversible key)

4 contacts

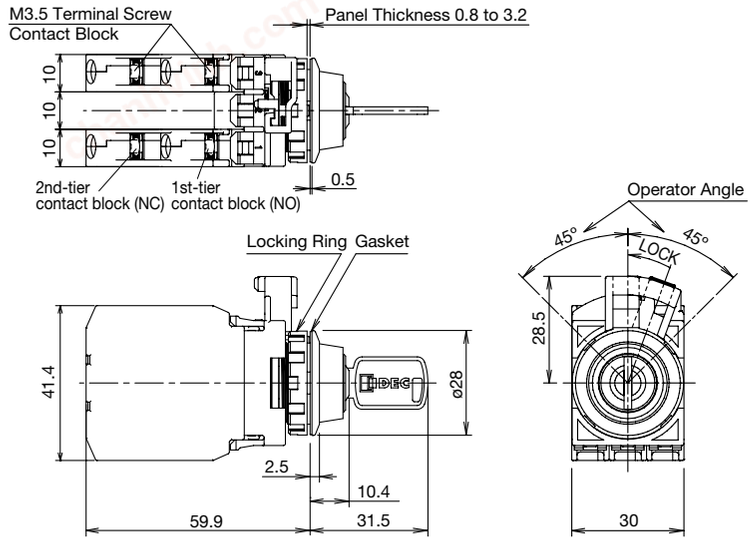

Key No: 0H to 2H (reversible key)

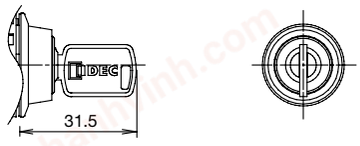

Key No: 3H to 6H (non-reversible key)

Keys

Reversible Key

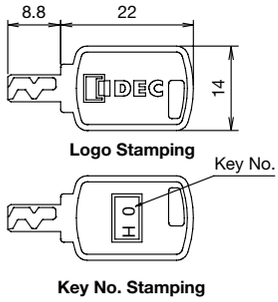

Non-reversible Key

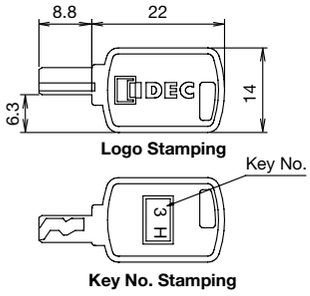

See page 5 for mounting hole layout.

chanhvinh.com

ø22 Flush Silhouette Switches CW Series Accessories / Maintenance Parts

Accessories

Shape	Material	Part No.	Package Quantity	Remarks
Locking Ring Wrench 	Brass	**MW9Z-T1**	1	• Used to tighten the locking ring when installing the CW series control unit in a panel cut-out. • Weight: Approx 150g 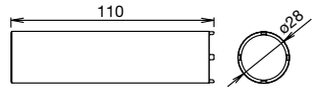
Mounting Hole Plug 	Polyamide (black)	**LW9Z-BP1**	1	• Used to plug an unnecessary ø22.3mm hole in the panel. • Degree of protection: IP65 • Panel thickness: 0.8 to 6.0 mm 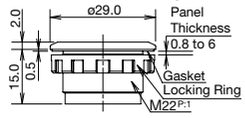
Rubber Boot 1  2 	1 For round flush	Rubber (Transparent silicon rubber)	**CW9Z-D1**	1	• Degree of protection: IP66/67 UL Type 4X • Panel thickness: 0.8 to 3.2 mm • Use with round extended illuminated pushbuttons/pushbuttons. 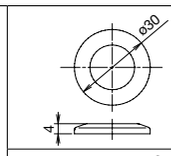
	2 For round extended		**CW9Z-D2**	1	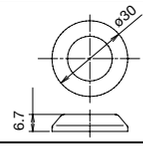

Nameplates

Description	Legend	Material	Part No.	Ordering No.	Package Quantity	Dimensions (mm)
CWAM 	Order marking plate (HWNP) separately.	Plastic (black)	**CWAM**	**CWAM**	1	• Marking plate HWNP is necessary. • Degree of protection: IP65 • Do not remove the gasket on the operator. 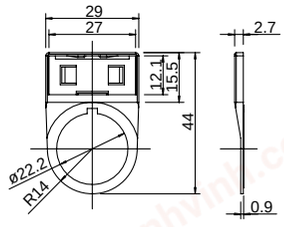 • Cannot be used with HW/FB series control box types.
				CWAMPN10	10	

Making Plate

Description	Material	Part No.	Ordering No.	Package Quantity	Dimensions (mm)
HWNP 	Aluminum (black) 1.0 mm thick	**HWNP-∗**	**HWNP∗**	1	• White legend on black background. 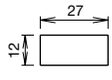
			HWNP-∗PN10	10	• Engraving area: W25, H7 • Thickness: 1.0 mm

• Specify a legend code in place of ∗ in the Ordering No.

Legends

Code	Legend
0	(blank)
1	ON
2	OFF
3	START

Code	Legend
4	STOP
31	OFF-ON
33	HAND-AUTO
53	HAND-OFF-AUTO

chanhvinh.com

Maintenance Parts

Used for replacement only. Do not use the maintenance parts to remodel or expand the CW series control units.

Shape		Material	Part No.	Ordering No.	Package Quantity	Remarks
Button 1 2 	1 For round flush	Polyarylate ø19.5 H3.5	**CW9Z-B11①**	**CW9Z-B11①PN05**	5	• For maintained pushbuttons. • Specify a button color code in place of ① in the Part No. B (black), G (green), R (red), S (blue), W (white), Y (yellow)
	2 For round extended	Polyarylate ø19.5 H6.2	**CW9Z-B12①**	**CW9Z-B12①PN05**	5	
Lens 2  1 3	1 Round Flush	Polyalylate	**CW9Z-L11②**	**CW9Z-L11②PN05**	5	Color code ②: A (amber), C (clear), G (green), R (red), S (blue), Y (yellow) Use a clear (C) lens for pure white (PW) illumination. 1: For illuminated pushbutton, pilot light 2: For illuminated pushbutton 3: For pilot light
	2 Round Extended	Polyalylate	**CW9Z-L12②**	**CW9Z-L12②PN05**	5	
	3 Round Extended	Polyalylate	**CW9Z-L15②**	**CW9Z-L15②PN05**	5	
Single Contact Block 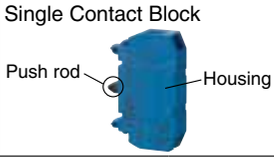		1NO	**YW-E10R**	**YW-E10R**	1	Push rod color: black Housing color: blue and black Terminal No.: 3-4
		1NC	**YW-E01**	**YW-E01**	1	Push rod color: red Housing color: reddish purple Terminal No.: 1-2
Double Contact Block  (photo: YW-EW1R1)		2NO	**YW-EW2R0**	**YW-EW2R0**	1	Push rod color: black Housing color: blue and black Terminal No. 1st tier: 13-14 2nd tier: 23-24
		2NC	**YW-EW02**	**YW-EW02**	1	Push rod color: red Housing color: reddish purple Terminal No. 1st tier: 11-12 2nd tier: 21-22
		1NO, 1NC	**YW-EW1R1**	**YW-EW1R1**	1	Push rod color: gray Housing color: reddish purple/blue Terminal No. 1st tier: 13-14 2nd tier: 21-22
Dummy Block 		Polyamide (black)	**CW-DB**	**CW-DBPN05**	5	
Locking Ring 		Polyamide (black)	**CW9Z-LN**	**CW9Z-LNPN05**	5	
Gasket 		Nitrile rubber	**CW9Z-WM**	**CW9Z-WMPN10**	10	Waterproof gasket between CW control unit bezel and the mounting panel. 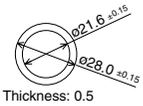 Thickness: 0.5
Spare Key Non-reversible  Reversible		Zinc (nickel-plated)	**LA9Z-SK-□**	**LA9Z-SK-□PN02**	2	Specify a key No. in place of □. 0H: Standard key (reversible) 1H to 2H: Reversible key 3H to 6H: Non-reversible key For dimensions, see page 19.

LED Module

Package quantity: 1

Shape	Operating Voltage Range	Current Draw	Part No.	Illumination Color Code ②
	6V AC/DC ±10%	15 mA	**CW-EAQ2②**	Specify an illumination color code in place of ② in the Part No. A: amber G: green PW: pure white R: red S: blue
	12V AC/DC ±10%	15 mA	**CW-EAQ3②**	
	24V AC/DC ±10%	16.5 mA	**CW-EAQ4②**	
	100/120V AC ±10%	18 mA	**CW-EAQH②**	
	200/220V AC ±10%	20 mA	**CW-EAQM②**	
	230/240V AC ±10%	18 mA	**CW-EAQM4②**	

• Use a pure white (PW) LED module for yellow (Y) illumination.

chanhvinh.com

ø22 Flush Silhouette Switches CW Series Instructions

Safety Precautions

- Turn off the power to the CW series control units before installation, removal, wiring, and maintenance. Failure to turn power off may cause electrical shocks or fire hazard.
- For wiring, use wires of a proper size to meet the voltage and current requirements. Tighten the M3.5 terminal screws to a tightening torque of 1.0 to 1.3 N·m. Failure to tighten the terminal screws may cause overheating and fire.

Operating Instructions

Notes for Operation

- When using the CW series control units in a safety-related circuit of a control system, observe safety rules and regulations of each country concerning particular applications of the actual machines and facilities. Perform risk assessment before operation to ensure safety.

Operating Conditions

- In corrosive gas or high-temperature, high-humidity atmosphere, contact failure due to corrosion or color change or breakage of the housing may occur.
- Main parts of the CW series control units are made of plastics. Do not scratch the surface with a sharp object or apply excessive shocks or load, otherwise the control units may be damaged. In particular, keep the button, lens, and bezel from such damage, otherwise appearance and function may be impaired.
- Do not apply detergents, cutting oils, or chemicals which may impair the function and appearance of the CW series control units.

Removing and Installing the Contact Unit

1. To remove the contact block from the operator, push the yellow locking lever and turn it to the left.



2. To install, align the TOP marking on the operator with the TOP marking on the contact block mounting adaptor, and turn the locking lever to the right.

Panel Mounting

Remove the contact block from the operator. Remove the locking ring from the operator. Insert the operator into the panel cut-out from the front, tighten the locking ring from the back, then install the contact block to the operator.

Installation in Panel Cut-out

Remove the locking ring from the operator. With the anti-rotation projection on the operator aligned with the recess in the mounting hole, insert the operator into the mounting hole. Tighten the locking ring from the rear of the panel.

Note for Panel Mounting

When installing the operator in a panel cut-out, use the optional locking ring wrench (MW9Z-T1) to tighten the locking ring to a recommended tightening torque of 1.2 N·m. Do not use pliers and do not tighten excessively, otherwise the operator may be damaged.

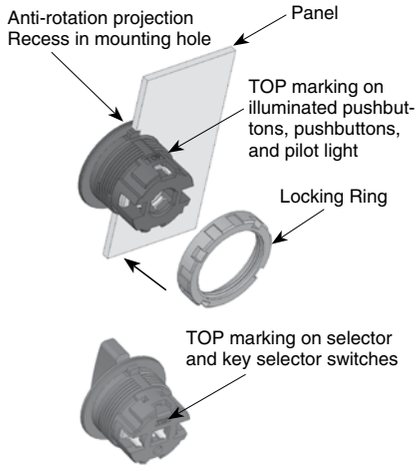

Mounting Hole

1. Mounting hole dimensions are in compliance with IEC 60947-5-1.
2. If the anti-rotation projection is removed from the bezel, CW series control units can be mounted in ø22.3 mm mounting holes. To remove the anti-rotation projection, remove the gasket and use cutting pliers to break the projection.

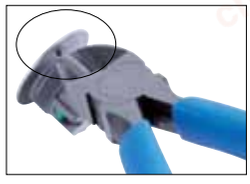

chanhvinh.com

Operating Instructions

Pushbuttons (momentary)

Momentary pushbutton caps cannot be removed. Do not tamper with the pushbutton caps using a screwdriver or pliers, otherwise the pushbutton caps may be damaged.

Pushbuttons (maintained) / Illuminated Pushbuttons / Pilot Lights

Removing the button/lens

To remove the button or lens from a pushbutton, illuminated pushbutton or pilot light, insert a flat screwdriver under the flange of the lens at 90° from the TOP marking and twist the screwdriver.

Do not insert the screwdriver too deeply and do not apply excessive force to the lens, otherwise the bezel surface may be damaged.

[Screwdriver Insertion Direction]

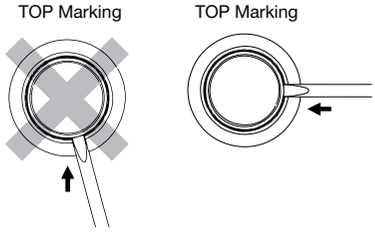

[Screwdriver Insertion Angle]

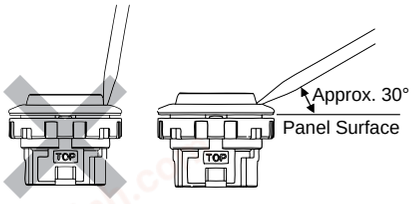

Installing the Lens

Turn the groove in the lens to the TOP marking on the operator housing. With the groove aligned with the ridge, press the lens in.

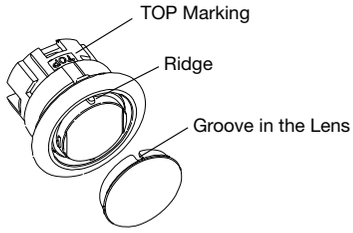

Marking

Marking plates are not available for CW series illuminated pushbuttons and pilot lights. Marking film can be inserted to indicate legends.

Applicable Marking Film Size

Illuminated Pushbutton (Round Flush) Pilot Light (Round Flush, Round Extended)	Illuminated Pushbutton (Round Extended)
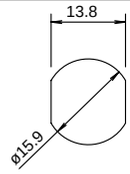	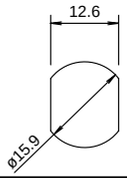

Thickness: 0.2 mm maximum
Film material: Polyester (recommended)
Note: Film is not supplied and must be prepared by the user.

Installing the Rubber Boot

When using in places where the switches are subjected to water splash or an excessive amount of dust, make sure to use the optional rubber boot. Mount the rubber boot so that the protrusion at the bottom surface of the operator fits with the recess on the operator, placing the rubber boot all around the operator sleeve. Make sure that the protrusion on the rubber boot and the recess on the operator is properly fitted, otherwise, the waterproof and dustproof characteristics are not ensured.

How to Install the Rubber Boot

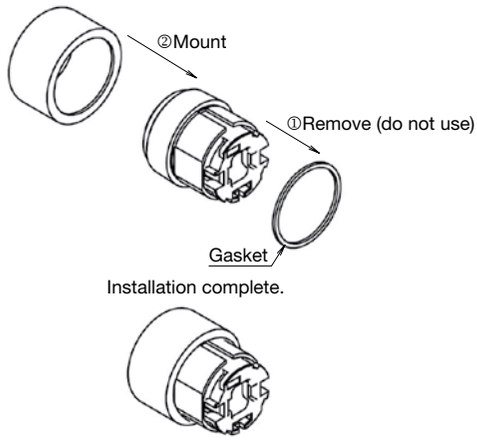

Note: Install the rubber boot before mounting the unit to the panel.

Maintained

Do not replace the button/lens while the operator is latched. Otherwise the internal structure will be damaged.

Selector Switches

Turn the selector operator or key to the detent positions.

Key Selector Switches

To prevent malfunctions and damage, take the following precautions.

- Insert the key to the bottom before turning.
- Do not remove the key while turning.
- Besides the standard key (0H), six other keys are available. Use a key with a key selector switch of a matching number indicated on the key cylinder. Standard key does not have a key number indication.
- Keys are available in two shapes.
  Key numbers 0H (standard), 1H, and 2H are reversible keys.
  Key numbers 3H, 4H, 5H, and 6H are non-reversible keys.
  Make sure of correct insertion direction.

chanhvinh.com

ø22 Flush Silhouette Switches CW Series Instructions

Contact Blocks and LED Modules

To remove the contact block from the operator, insert a flat screwdriver under the latch and push down the screwdriver as shown below. Before removing the LED module, first remove all contact blocks, and remove the LED module in the same manner.

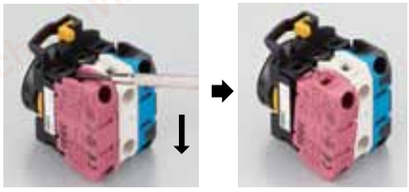

Nameplate / Marking Plate

- Installing the marking plate on a nameplate

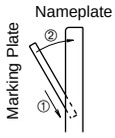

- To remove the marking plate, insert the flat screwdriver between the marking plate and nameplate.

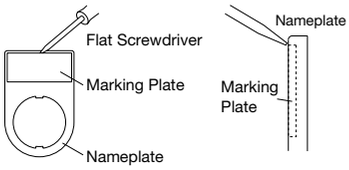

Note: When using a nameplate, the mounting panel thickness is 2.6 mm maximum.

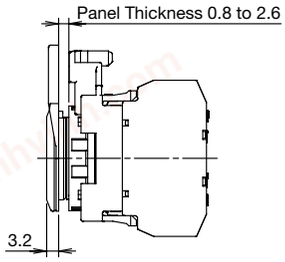

Wiring

Applicable Wires

Stranded wire: 2.0 mm^2 maximum (14AWG)
Solid wire: ø1.6 mm maximum (16 AWG)

One or two wires can be connected to the terminal.

Applicable Crimping Terminals

[Spade terminal]

When using crimping terminals, be sure to use insulating tubes or use insulated crimping terminals.

Note: Ring terminals cannot be used.

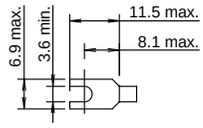

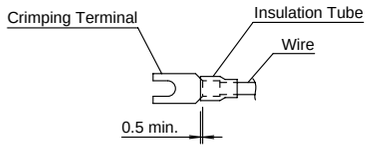

[Ferrule]

When connecting two ferrules to one terminal, use ferrules without insulation.

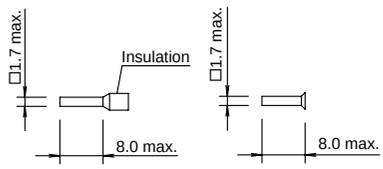

When using spade terminals or ferrules, insert them to the bottom.

[Solid Wire]

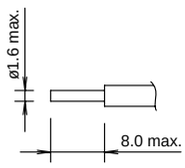

Specifications and other descriptions in this catalog are subject to change without notice.

IDEC CORPORATION
6-64, Nishi-Miyahara 2-Chome, Yodogawa-ku, Osaka 532-0004, Japan
Tel: +81-6-6398-2571, Fax: +81-6-6392-9731
E-mail: marketing@idec.co.jp

IDEC CORPORATION (USA)
1175 Elko Drive
Sunnyvale, CA 94089-2209, USA
Tel: +1-408-747-0550 / (800) 262-IDEC (4332)
Fax: +1-408-744-9055 / (800) 635-6246
E-mail: opencontact@idec.com

IDEC CANADA LIMITED
3155 Pepper Mill Court, Unit 4
Mississauga, Ontario, L5L 4X7, Canada
Tel: +1-905-890-8561
Toll Free: (800) 262-IDEC (4332)
Fax: +1-905-890-8562
E-mail: sales@ca.idec.com

IDEC AUSTRALIA PTY. LTD.
Unit 17, 104 Ferntree Gully Road,
Oakleigh, Victoria 3166, Australia
Tel: +61-3-8523-5900, Toll Free: 1800-68-4332
Fax: +61-3-8523-5999
E-mail: sales@au.idec.com

IDEC ELECTRONICS LIMITED
Unit 2, Beechwood, Chineham Business Park,
Basingstoke, Hampshire RG24 8WA, UK
Tel: +44-1256-321000, Fax: +44-1256-327755
E-mail: sales@uk.idec.com

IDEC ELEKTROTECHNIK GmbH
Wendenstrasse 331, 20537 Hamburg, Germany
Tel: +49-40-25 30 54 - 0, Fax: +49-40-25 30 54 - 24
E-mail: service@idec.de

IDEC (SHANGHAI) CORPORATION
Room 701-702 Chong Hing Finance Center,
No. 288 Nanjing Road West, Shanghai 200003, PRC
Tel: +86-21-6135-1515
Fax: +86-21-6135-6225 / +86-21-6135-6226
E-mail: idec@cn.idec.com

IDEC (BEIJING) CORPORATION
Room 211B, Tower B, The Grand Pacific Building,
8A Guanghua Road, Chaoyang District,
Beijing 100026, PRC
Tel: +86-10-6581-6131, Fax: +86-10-6581-5119

IDEC (SHENZHEN) CORPORATION
Unit AB-3B2, Tian Xiang Building, Tian'an Cyber Park,
Fu Tian District, Shenzhen, Guang Dong 518040, PRC
Tel: +86-755-8356-2977, Fax: +86-755-8356-2944

IDEC IZUMI (H.K.) CO., LTD.
Units G &H, 26/F., Tower No. 133 Hoi Bun Road,
Kwun Tong, Kowloon Hong Kong
Tel: +852-2803-8989, Fax: +852-2565-0171
E-mail: info@hk.idec.com

IDEC TAIWAN CORPORATION
8F-1, No. 79, Hsin Tai Wu Road, Sec. 1,
Hsi-Chih District, 22101 New Taipei City, Taiwan
Tel: +886-2-2698-3929, Fax: +886-2-2698-3931
E-mail: service@tw.idec.com

IDEC IZUMI ASIA PTE. LTD.
No. 31, Tannery Lane #05-01,
HB Centre 2, Singapore 347788
Tel: +65-6746-1155, Fax: +65-6844-5995
E-mail: info@sg.idec.com

www.idec.com

Cat. No. EP1473-0 JULY 2013 PDF
(13/07/23)