chanhvinh.com

DATA SHEET

SENCITY® Spot-S 2x2 Wi-Fi MIMO Antenna

1356.17.0076

Properties

- Compact Industrial antenna for Wi-Fi bands between 5150 MHz and 5935 MHz
- Gain of 9 dBi with dual slant +/-45° polarisation
- Rugged design, meets EN 50155 and EN 50125-3 railway standards
- Fire retardant acc. to EN 45545-2 and NFPA130
- For both indoor and outdoor mounting with IP rating IP66 & IP67
- Wall mounting material included



Electrical bands	
	Band 1
Frequency	5150 MHz ... 5935 MHz
VSWR	2
Impedance	50 Ω
Gain	9 dBi
HPBW vertical	60 °
HPBW horizontal	70 °
Isolation between Ports	20 dB
Vertical Electrical Tilt	0 °
Front to back ratio	20 dB
Ambient Temperature	25 °C
Composite Power max	30 W

Ports		
	Port 1	**Port 2**
Connector	N, jack (female)	N, jack (female)
Polarization	-45° slant	+45° slant
DC grounded	Yes	Yes

HUBER+SUHNER

chanhvinh.com

SENCITY® Spot-S 2x2 Wi-Fi MIMO Antenna

1356.17.0076

Connections		
Port number	Port 1	Port 2
Band 1	✓	✓

Mechanical data	
Weight	0.11 kg
Dimensions	101 mm x 81 mm x 36 mm (Heigth x Width x Depth)
Windload	front: 15 N at 160km/h, Wind Speed survival: 220 km/h

Interface and material data	
Radome material	PC (Polycarbonate)
Radome colour	RAL 7044 (grey)

Environmental data	
Operation temperature	-40 °C ... 85 °C
Storage temperature	-40 °C ... 85 °C
Transport temperature	-40 °C ... 85 °C
Environment (application)	Indoor/Outdoor
Flammability rating	EN 45545-2

Environmental remarks

FLAMMABILITY: EN 45545-2 (2013) HL3 and NFPA130 (2013), also BS 6853 and DIN 5510-2
ENVIRONMENT: EN 50155 (2016) and EN 50125-3 (2003), also EN 60068 related
IP RATING: IP 66 / IP 67 (IEC 60529)
SOLAR RADIATION: EN 50125-3:2004 §4.9, 1120 W/m² for 20h
AIR PRESSURE: EN 50125-3:2004 §4.2, Altitude Class A1 (up to 1400m)
AIR PULE PRESSURE: EN 50125-3:2004 §4.2, 1 kPa/s
RAIN: EN 50125-3:2004 §4.6, delivery rate: 6 mm/min
VIBRATION / SHOCK: EN 50125-3:2004 §4.13, position profile: "outside the track"
POLLUTION: EN 50125-3:2004 §4.11, pollution levels: 4B1, 4S1
CORROSION: MIL-F-14072 E Type 1 "exposed"
MECHANICAL IMPACT (HAMMER IMPACT): EN 60068-2-75 (IEC 62262/2002-02 IK06)

Additional Information

Following Declaration of Conformity for SENCITY Spot-S antennas are available on request: * Industrial standards EN 60068 / EN 60529 / IEC 61373: Ref. DOC-0000318049 * Railway rolling stock, environmental standards EN 50155 and fire behaviour EN 45545-2k, NFPA130: Ref. DOC-0000380375 * Railway trackside, environmental standards EN 50125-3 and fire behaviour EN 45545-2: Ref. DOC-0000411396

chanhvinh.com

SENCITY® Spot-S 2x2 Wi-Fi MIMO Antenna

1356.17.0076

Outline drawing

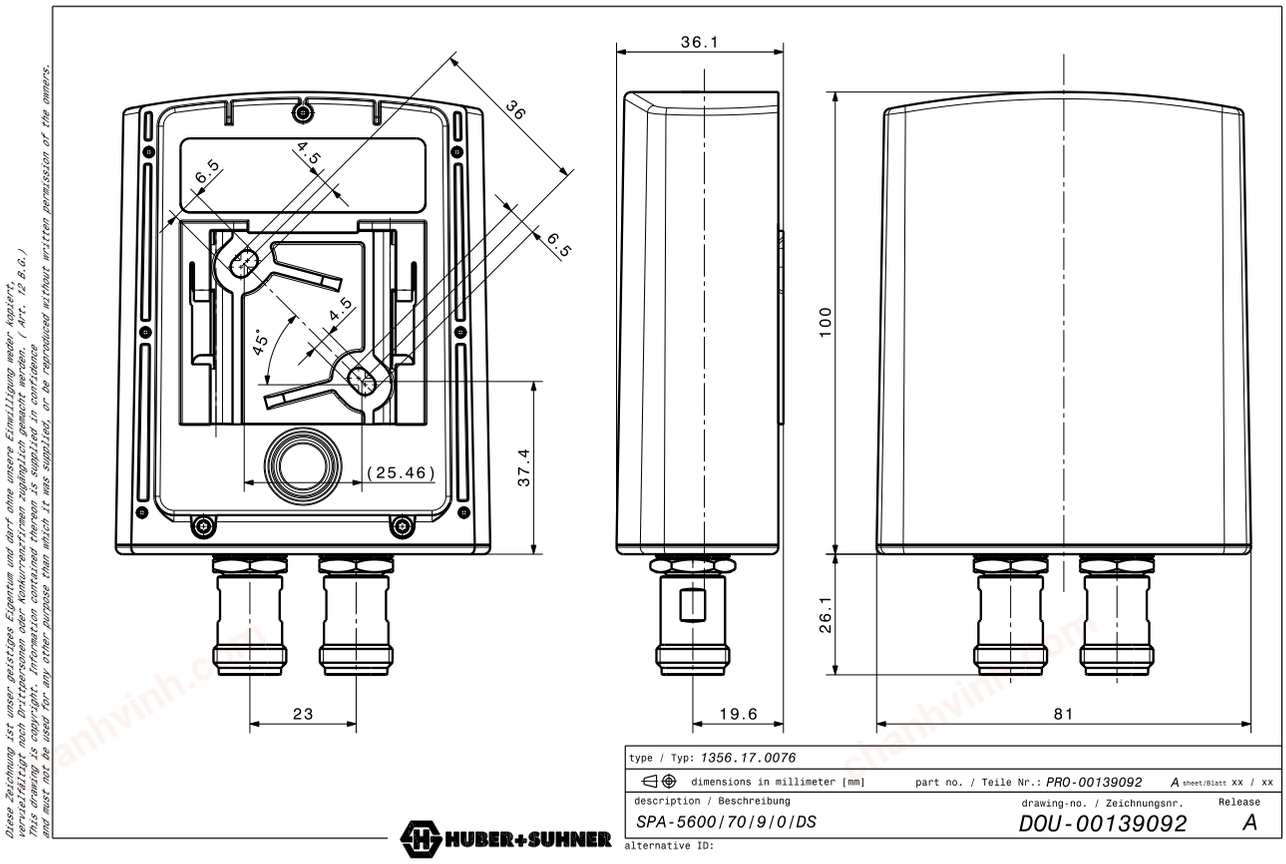

Diese Zeichnung ist unser geistiges Eigentum und darf ohne unsere Einwilligung weder Kunden, Konkurrenzfirmen oder Dritt-personen zugänglich gemacht werden. (Art. 12 B.G.)
This drawing is copyright. Information contained therein is supplied in confidence and must not be used for any other purpose than which it was supplied, or be reproduced without written permission of the owners.

HUBER+SUHNER is certified by ISO 9001, ISO 14001, ISO 45001, IATF 16949, AS/EN 9100 and ISO/TS 22163-IRIS. Waiver: Facts and figures herein are for information only and do not represent any warranty of any kind.
DOCUMENT PIM-P3286 / Date of publication: 20.06.2024 / uncontrolled copy