chanhvinh.com

Honeywell

SMART Position Sensor, 100° and 180° Arc Configurations

Superior **M**easurement.
Accurate. **R**eliable. **T**hinking.



DESCRIPTION

The Honeywell SMART Arc Position Sensor is one of the most durable, adaptable, lightweight, and non-contact position sensors available, enabling absolute position sensing with enhanced accuracy. This simple, robust, arc position sensor offers an IP69K sealed package, eliminating mechanical failure mechanisms, reducing wear and tear, improving reliability and durability, and minimizing downtime.

The SMART Arc Position Sensor is a non-contact sensing solution, providing highly accurate motion control and improving operation efficiency and safety. This Honeywell position sensor utilizes magnetoresistive technology to detect the position of a magnet relative to the sensor in one of two available sensing ranges:
0º to 100º
0º to 180º

Why is the SMART Position Sensor smart? SMART means that this is a sensor that can essentially think for itself. SMART Position Sensors provide a self-diagnostics feature and data gathering for enhanced reliability and closed-loop feedback control.

These devices use a patented combination of an ASIC (Application-Specific Integrated Circuit) and an array of MR (magnetoresistive) sensors to accurately and reliably determine the position of a magnet attached to a moving object so that the object's position can be determined or controlled.

The MR array measures the output of the MR sensors mounted along the magnet's direction of travel. The output and the MR sensor sequence determine the nearest pair of MR sensors to the center of the magnet location. The output of these two MR sensors is then used to determine the position of the magnet between them.

With this sensor, Honeywell has utilized MR technology through the ASIC at a level never before accomplished.

Other configurations are in development.

VALUE PROPOSITIONS (★ = competitive differentiator)

★ **Reliable, durable:** Non-contact design reduces wear and tear, improving reliability and durability, minimizing downtime
★ **Easy to install:** Installation takes four steps (1: position device; 2: drill holes; 3: mount sensor; 4: locate magnet/connect sensor) vs. up to 14 steps some competitive products require, simplifying installation and reducing set-up costs
- **Rugged:** Honeywell utilizes unique package materials with no moving parts within the sensor, making it resistant to vibration, shock, and extreme temperatures
★ **Flexible:** Air gap tolerance of 7,8 ±2,5 mm [0.307 ±0.098 in] or 9,2 ±2,5 mm [0.36 ±0.09 in] (100°) and 8,5 ±2,5 mm [0.338 ±0.098 in] (180°) between sensor and magnet expands application use
★ **Cost effective:** Adaptable, non-contacting design allows customers to eliminate unnecessary connections for installation, reducing installation steps/time and components
- **Accurate:** 100° configuration accurately measures values down to 0.06° while the 180° configuration accurately measures values down to 0.11°
★ **Adaptable:** Electronics on board allow for flexible packaging and component compatibility with existing systems
★ **Lightweight:** Lighter in weight than optical encoders
★ **Self-diagnostics feature** can reduce equipment downtime by providing predictive maintenance input
- **Combined patented MR sensor and ASIC technology** provide enhanced differentiation and performance
- **IP67, IP69K sealing** allow use in many harsh applications
- **RoHS-compliant** materials meet Directive 2002/95/EC

chanhvinh.com

SMART Position Sensor

POTENTIAL APPLICATIONS

Transportation

- Aerial work lift platform, front end loader and digger/excavator boom position
- Scissor lift position
- Refuse truck lift and automatic reach arm position
- Mobile crane steering
- Timber harvester/processor equipment cutter arm angle
- On-board loader weighing system position

Industrial

- Telescoping conveyor elevation
- Power generation contact angle
- Rail-road crossing arms position

Military

- Remote weapon systems elevation
- Chassis suspension systems position height
- Military vehicle door position

Aerospace:

- Ground-based solar panels elevation and azimuth
- Ground-based satellite dish elevation and azimuth

Medical:

- Robotically-assisted surgery equipment position
- Patient bed elevation

For more information on these potential applications, please see the application note "SMART Position Sensor, 100° and 180° Arc Configurations".

Table 1. Specifications

Characteristic	Component	Parameter					
		100° Arc				180° Arc	
		SPS-A100D-HAMS	SPS-A100D-VAMS	SPS-A100D-HAWS	SPS-A100X-LAAS0401	SPS-A180D-HAMS	SPS-A180D-VAMS
Sensing range	sensor only	0° to 100°				0° to 180°	
Sensing location on arc		inside			outside	inside	
Resolution		0.06°				0.11°	
Supply voltage		6 Vdc to 24 Vdc	18 Vdc to 40 Vdc	6 Vdc to 24 Vdc	5 Vdc	6 Vdc to 24 Vdc	18 Vdc to 40 Vdc
Output		0.5 Vdc to 4.5 Vdc (10% to 90% of 5 Vdc)					
Supply current		45 mA max.			30 mA max.	45 mA max.	
Linearity		±0.4% full scale output					
Reverse polarity		26.4 Vdc	40 Vdc	26.4 Vdc	N/A	26.4 Vdc	40 Vdc
Sensitivity		40 mV/° ±4% FS				22.22 mV/° ±4% FS	
Measurement frequency		312 Hz typ.					
Termination		4-pin M12 connector		18 AWG flying leads	Ampseal 16 connector (p/n 776536)	4-pin M12 connector	
Operating temperature	sensor and magnet actuator	-40 °C to 85 °C [-40 °F to 185 °F]					
Storage temperature		-40 °C to 150 °C [-40 °F to 302 °F]					
Air gap		7,8 ±2,5 mm [0.307 ±0.098 in]			9,2 ±2,5 mm [0.36 ±0.09 in]	8,58 ±2,5 mm [0.338 ±0.098 in]	
Sealing		IP67, IP69K					
Shock		50 G half sine wave with 11 ms duration					
Vibration		20 G from 10 Hz to 2000 Hz					
Housing material		thermoplastic					
Approvals		CE					
Mounting: screws recommended torque		M6 or 1/4-20 6 N m to 8 N m [53.1 in lb to 70.8 in lb]					
Material	magnet actuator only	neodymium					
Strength		10,000 Gauss					

Notes:

- Tolerance applies for full sense range.
- Device used to read analog output must have input impedance greater than 1 MOhm.
- The output voltage outside of the valid measurement range will be indeterminate.
- Percent linearity is the quotient of the measured output deviation from the best fit line at the measured temperature to the full scale output span.
- Mating connector: 776536-1.

NOTICE

Ferrous metal within a 100 mm [3.9 in] radius of the magnet may affect sensor performance.

chanhvinh.com

100° and 180° Arc Configurations

Figure 1. Dimensional Drawings (For reference only: mm/[in].)

SPS-A100D-HAMS, SPS-A100D-VAMS

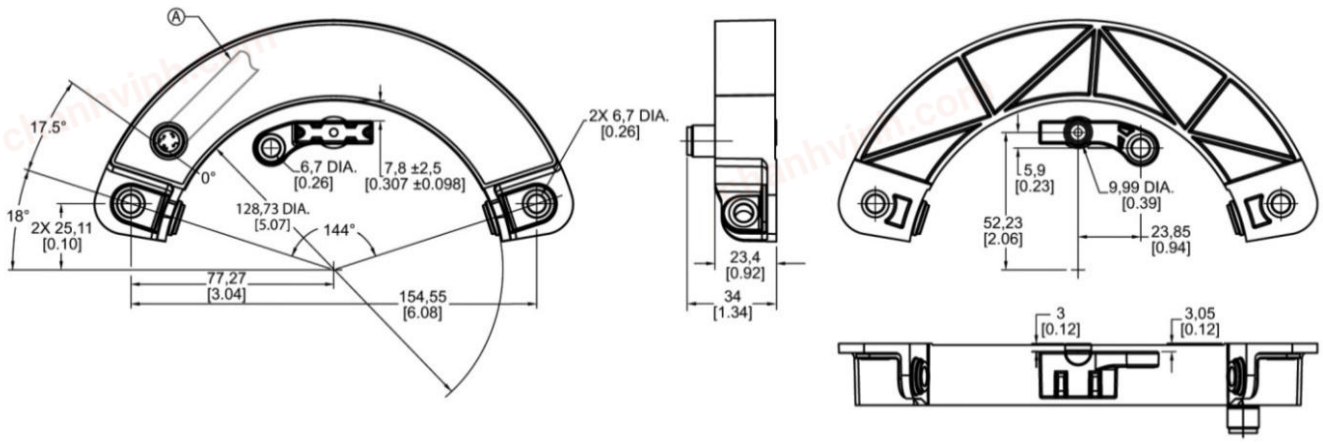

SPS-A100D-HAWS

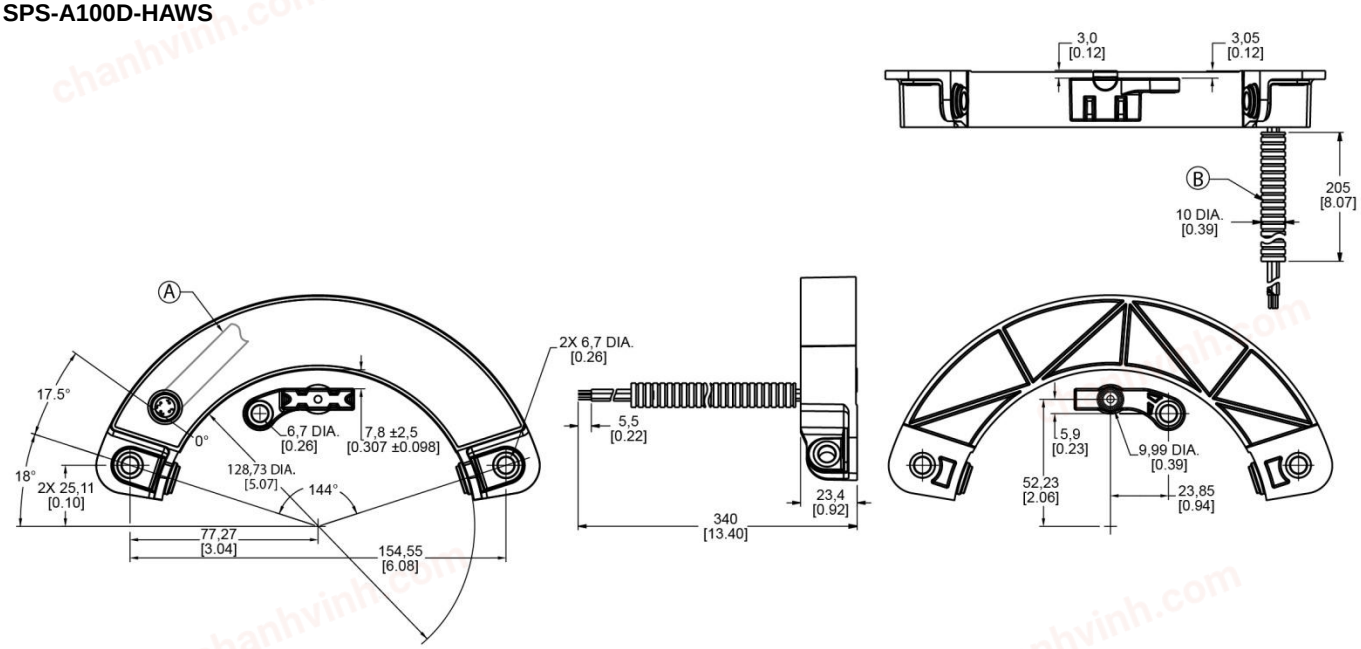

A = Cable direction for right angle connector

B = Polyethylene conduit

chanhvinh.com

SMART Position Sensor

Figure 1. Dimensional Drawings (For reference only: mm/[in], continued.)

SPS-A100X-LAAS0401

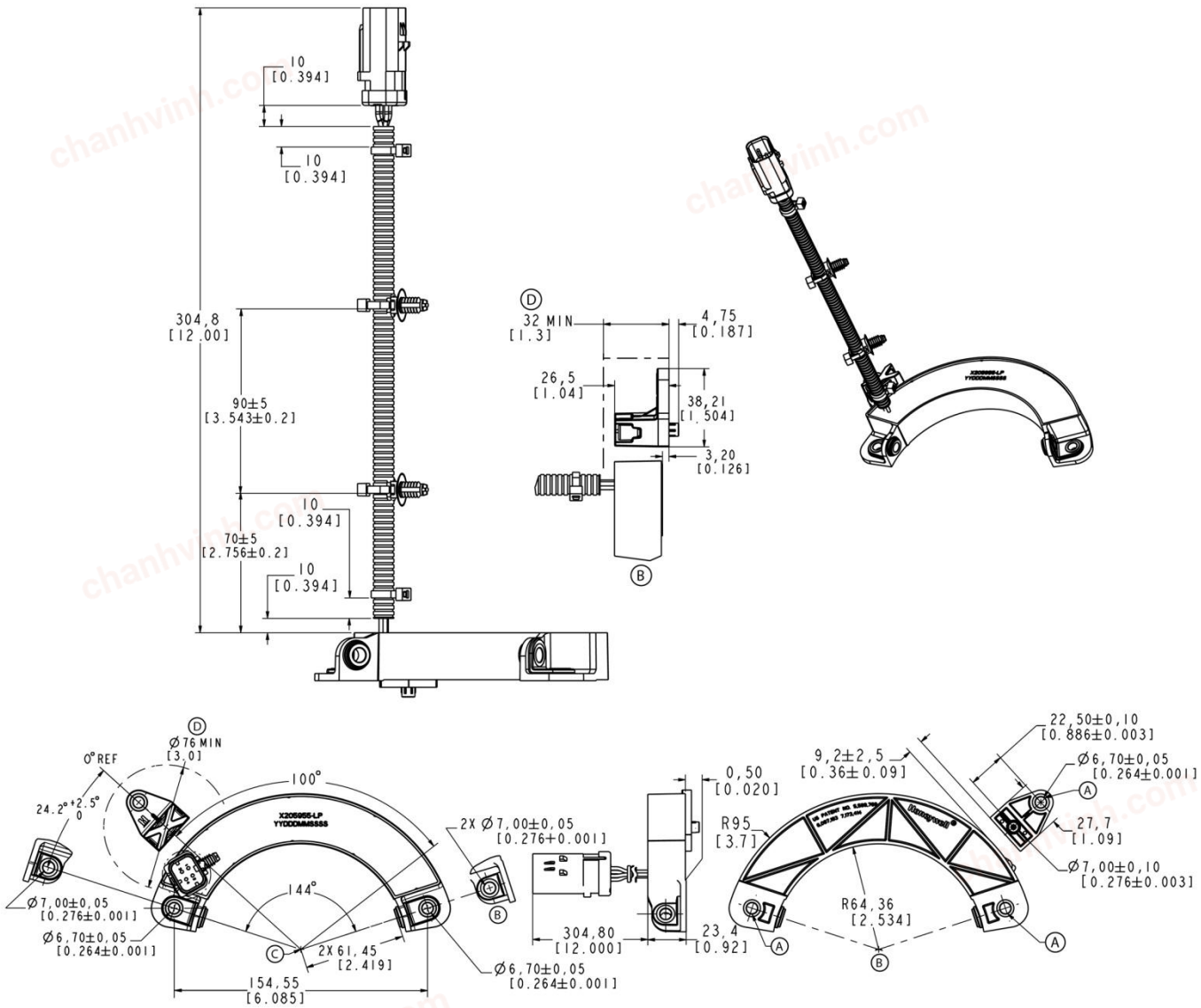

A = Magnet pin locating hole
B = Partial view
C = Rotating axis center
D = Magnetic sensitive zone: protect with a non-ferrous metal shield

chanhvinh.com

100° and 180° Arc Configurations

Figure 1. Dimensional Drawings (For reference only: mm/[in], continued.)

SPS-A180D-HAMS, SPS-A180D-VAMS

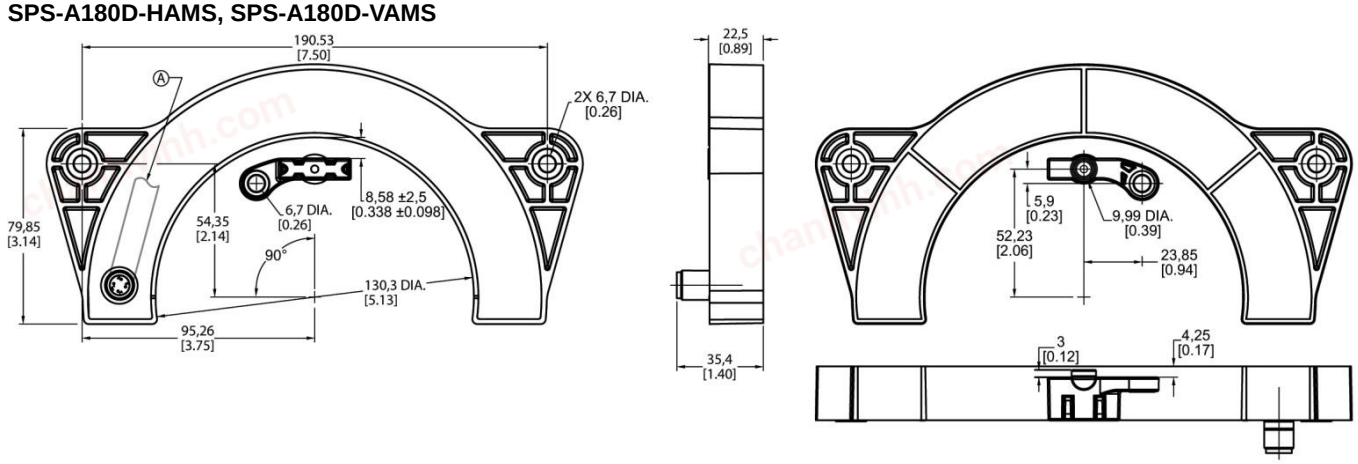

A = Cable direction for right angle connector

B = Polyethylene conduit

Figure 2. Connections

4 Pin M12 Connector SPS-A100D-HAMS, SPS-A100D-VAMS SPS-A180D-HAMS, SPS-A180D-VAMS	Ampseal 16 Connector (p/n 776536) SPS-A100X-LAAS0401	18 AWG Flying Leads SPS-A100D-HAWS
	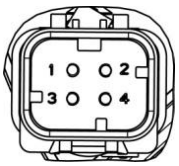	
Pin 1 = supply voltage (+) Pin 2 = output Pin 3 = ground (-) Pin 4 = inverted output	Pin 1 = supply voltage (+) Pin 2 = output Pin 3 = ground (-) Pin 4 = inverted output	Red wire = supply voltage (+) Green wire = output Black wire = ground (-) Blue wire = inverted output

chanhvinh.com

Figure 3. Sensor Output Performance Chart Showing Ideal Outputs (Applies to all catalog listings.)

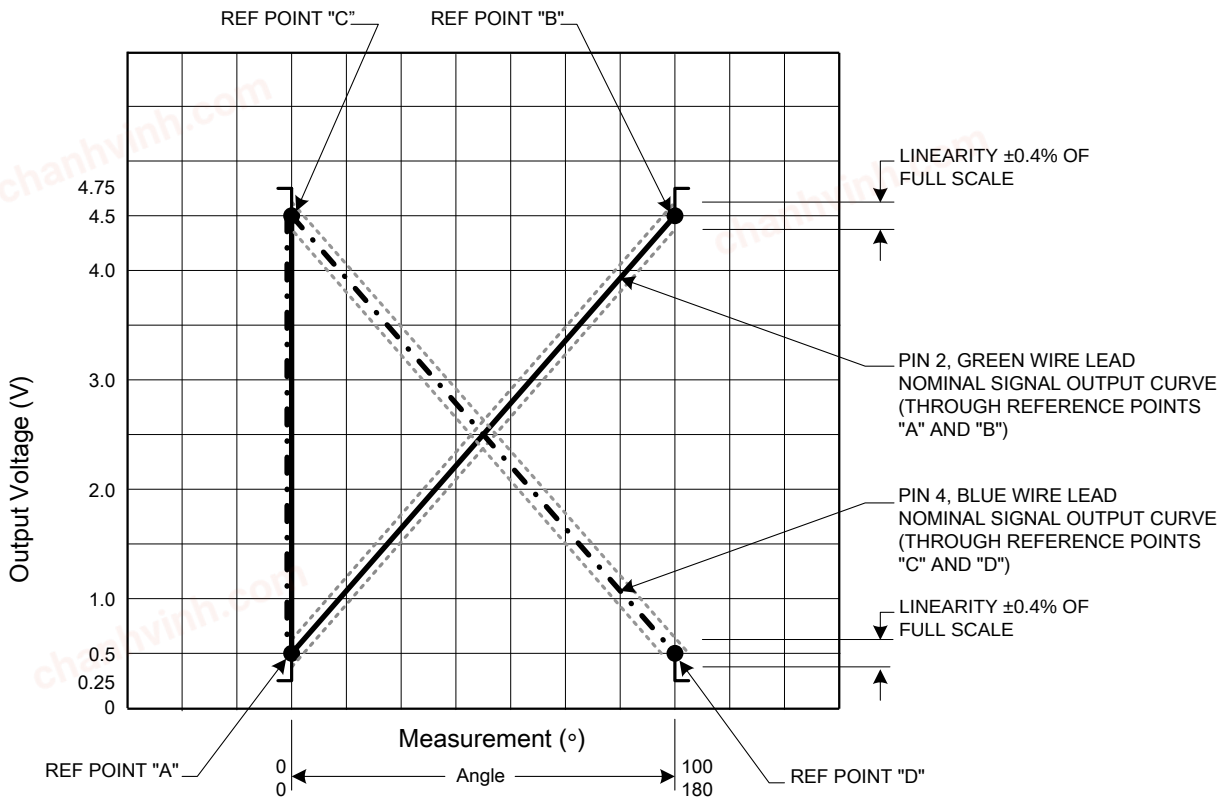

Note: Diagnostic for magnet out of range: green wire lead > 4.55 Vdc; blue wire lead < 0.45 Vdc.

chanhvinh.com

Order Guide

Catalog Listing	Description
SPS-A100D-HAMS	SMART Position Sensor, 100° arc configuration, 0° to 100° inside sensing range, 6 Vdc to 24 Vdc supply voltage, 0.5 Vdc to 4.5 Vdc analog output, 4-pin M12 connector, magnet actuator included
SPS-A100D-VAMS	SMART Position Sensor, 100° arc configuration, 0° to 100° inside sensing range, 18 Vdc to 40 Vdc supply voltage, 0.5 Vdc to 4.5 Vdc analog output, 4-pin M12 connector, magnet actuator included
SPS-A100D-HAWS	SMART Position Sensor, 100° arc configuration, 0° to 100° inside sensing range, 6 Vdc to 24 Vdc supply voltage, 0.5 Vdc to 4.5 Vdc analog output, 18 AWG flying leads, magnet actuator included
SPS-A100X-LAAS0401	SMART Position Sensor, 100° arc configuration, 0° to 100° outside sensing range, 5 Vdc supply voltage, 0.5 Vdc to 4.5 Vdc analog output, Ampseal 16 connector (p/n 776536), magnet actuator included
SPS-A180D-HAMS	SMART Position Sensor, 180° arc configuration, 0° to 180° inside sensing range, 6 Vdc to 24 Vdc supply voltage, 0.5 Vdc to 4.5 Vdc analog output, 4-pin M12 connector, magnet actuator included
SPS-A180D-VAMS	SMART Position Sensor, 180° arc configuration, 0° to 180° inside sensing range, 18 Vdc to 40 Vdc supply voltage, 0.5 Vdc to 4.5 Vdc analog output, 4-pin M12 connector, magnet actuator included

⚠ WARNING

PERSONAL INJURY

DO NOT USE these products as safety or emergency stop devices or in any other application where failure of the product could result in personal injury.

Failure to comply with these instructions could result in death or serious injury.

WARRANTY/REMEDY

Honeywell warrants goods of its manufacture as being free of defective materials and faulty workmanship. Honeywell's standard product warranty applies unless agreed to otherwise by Honeywell in writing; please refer to your order acknowledgement or consult your local sales office for specific warranty details. If warranted goods are returned to Honeywell during the period of coverage, Honeywell will repair or replace, at its option, without charge those items it finds defective. **The foregoing is buyer's sole remedy and is in lieu of all other warranties, expressed or implied, including those of merchantability and fitness for a particular purpose. In no event shall Honeywell be liable for consequential, special, or indirect damages.**

While we provide application assistance personally, through our literature and the Honeywell web site, it is up to the customer to determine the suitability of the product in the application.

Specifications may change without notice. The information we supply is believed to be accurate and reliable as of this printing. However, we assume no responsibility for its use.

⚠ WARNING

MISUSE OF DOCUMENTATION

- The information presented in this product sheet is for reference only. Do not use this document as a product installation guide.
- Complete installation, operation, and maintenance information is provided in the instructions supplied with each product.

Failure to comply with these instructions could result in death or serious injury.

SALES AND SERVICE

Honeywell serves its customers through a worldwide network of sales offices, representatives and distributors. For application assistance, current specifications, pricing or name of the nearest Authorized Distributor, contact your local sales office or:

E-mail: info.sc@honeywell.com

Internet: sensing.honeywell.com

Phone and Fax:

Asia Pacific	+65 6355-2828
	+65 6445-3033 Fax
Europe	+44 (0) 1698 481481
	+44 (0) 1698 481676 Fax
Latin America	+1-305-805-8188
	+1-305-883-8257 Fax
USA/Canada	+1-800-537-6945
	+1-815-235-6847
	+1-815-235-6545 Fax

Sensing and Control
Honeywell
1985 Douglas Drive North
Golden Valley, MN 55422
sensing.honeywell.com

000732-3-EN
February 2013
Copyright © 2013 Honeywell International Inc. All rights reserved.