chanhvinh.com

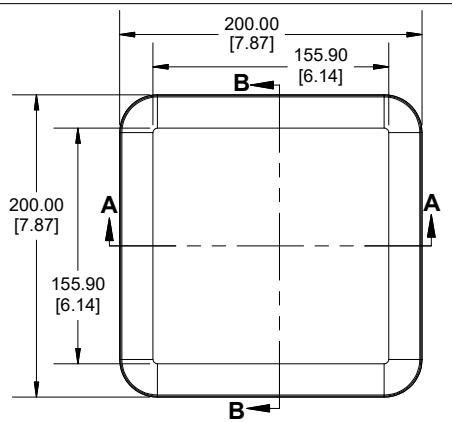

TOP VIEW

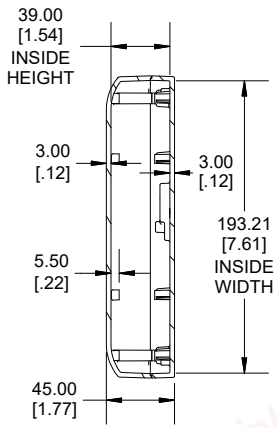

SECTION B-B
END VIEW

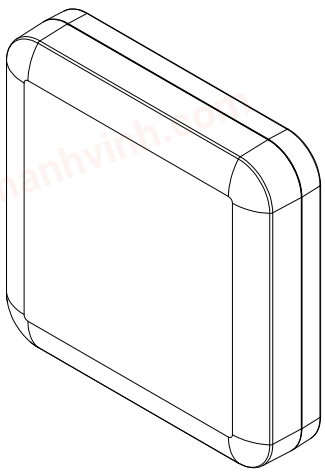

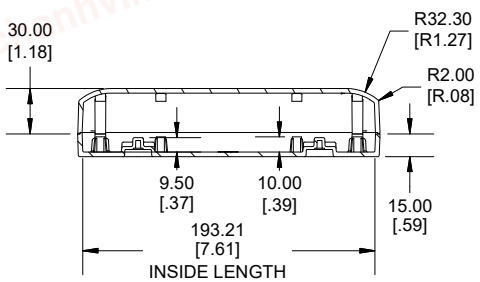

SECTION A-A
SIDE VIEW

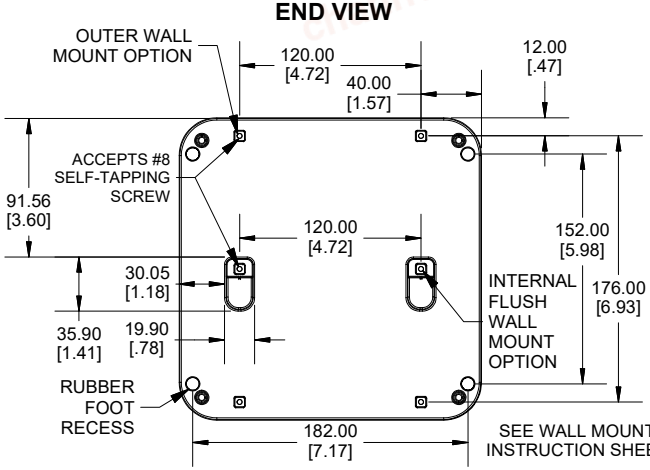

WALL MOUNT FOOT VIEW

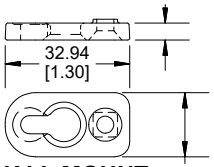

WALL MOUNT
FOOT

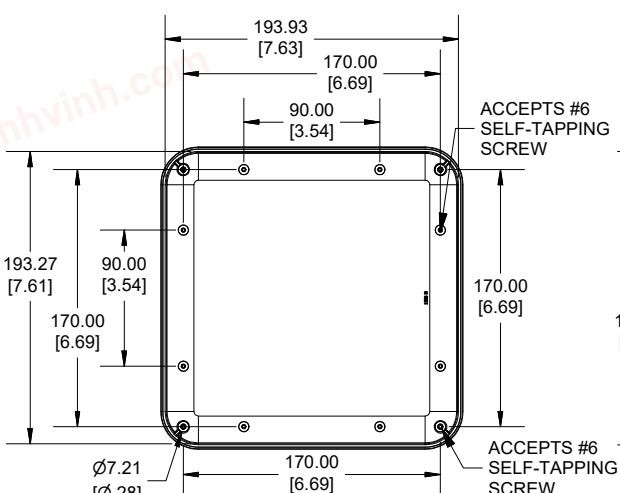

INSIDE LID

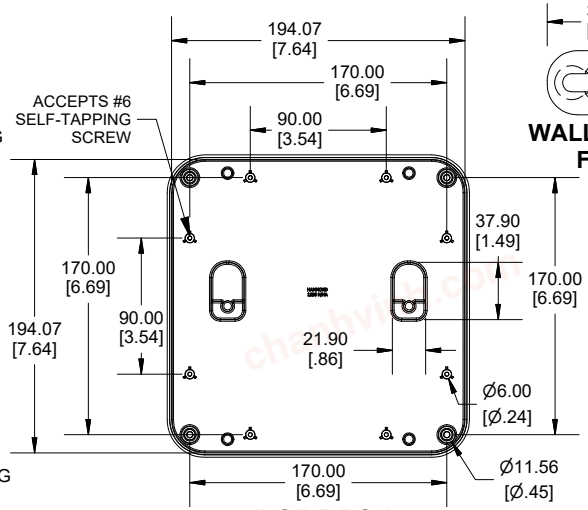

INSIDE BOX

Dimensions:
mm
[inches]

Enclosures can be Factory Modified (Milling, Drilling, Printing etc.)
Contact Factory (modshop@hammfg.com) for quotes
Solid models of this enclosure available in .stp or .x_t
(Part number and text placement/orientation on our products are subject to change, we do not recommend using them as a locating reference for modification purposes)

NOTE
Purchased assembly includes box, lid, 4 cover screws and 4 rubber feet. Molded from FRABS (UL94-V0) plastic
Recommended Cover Screw Torque - 71-85 ozf-in (50-60 cN-m)
Recommended PCB Screw Torque - 42-56 ozf-in (30-40 cN-m)

1556		
1556H Enclosure		
Flame Retardant ABS Black Enclosure		1556HBK
Flame Retardant ABS Grey Enclosure		1556HGY
Flame Retardant ABS White Enclosure		1556HWH
ACCESSORIES		
Clear Rubber Feet (Pkg 24)		1421T6CL
Steel Cover Screws [#6 X 1/2" Self Tapping] (Pkg 50)		SC527-50
Steel P.C.Board Screw [#6 X 1/4" Self Tapping] (Pkg 50)		SC526-50
Stainless Steel Wall Mount foot Screw [#8 X 3/8" Self Tapping] (Pkg 50)		SC556-50
Wall Mount Foot Kit [wall mount foot] (Pkg 4) [#8 X 3/8" Self Tapping] (Pkg 4)	FR ABS Grey	1556FOOTGY-4
	FR ABS Black	1556FOOTBK-4
	FR ABS White	1556FOOTWH-4

HAMMOND MANUFACTURING®
1556H
www.hammondmfg.com

REV: 20.01.2023