chanhvinh.com

HAMAMATSU
PHOTON IS OUR BUSINESS

Si PIN photodiodes



S5971 S5972 S5973 series

High-speed photodiodes (S5973 series: 1 GHz)

The S5971, S5972 and S5973 series are high-speed Si PIN photodiodes designed for visible to near infrared light detection. These photodiodes provide wideband characteristics at a low bias, making them suitable for optical communications and other high-speed photometry. The S5973 series includes a mini-lens type (S5973-01) that can be efficiently coupled to an optical fiber and a violet sensitivity enhanced type (S5973-02) ideal for violet laser detection.

Features

- **High-speed response**
  S5971 : 100 MHz (V_R=10 V)
  S5972 : 500 MHz (V_R=10 V)
  S5973 series: 1 GHz (V_R=3.3 V)
- **Low price**
- **High sensitivity**
  S5973-02: 0.3 A/W, QE=91 % (λ=410 nm)
- **High reliability**

Applications

- **Optical fiber communications**
- **High-speed photometry**
- **Violet laser detection (S5973-02)**

Structure / Absolute maximum ratings

Type no.	Dimensional outline/ Window material*1	Package (mm)	Photosensitive area size (mm)	Effective photosensitive area (mm²)	Absolute maximum ratings: Reverse voltage V_R Max. (V)	Power dissipation P (mW)	Operating temperature Topr (°C)	Storage temperature Tstg (°C)
S5971	①/K	TO-18	φ1.2	1.1	20	50	-40 to +100	-55 to +125
S5972			φ0.8	0.5				
S5973			φ0.4	0.12				
S5973-01	②/L							
S5973-02	③/K							

Note: Exceeding the absolute maximum ratings even momentarily may cause a drop in product quality. Always be sure to use the product within the absolute maximum ratings.

Electrical and optical characteristics

Type no.	Spectral response range λ (nm)	Peak sensitivity wavelength λp (nm)	Photosensitivity S (A/W): λp	660 nm	780 nm	830 nm	Short circuit current Isc 100 lx (μA)	Dark current ID: Typ. (nA)	Dark current ID: Max. (nA)	Temp. coefficient of ID ΔTID (times/°C)	Cutoff frequency fc (GHz)	Terminal capacitance Ct f=1 MHz (pF)	Noise equivalent power NEP V_R=10 V λ=λp (W/Hz$^{1/2}$)
S5971	320 to 1060	920	0.64	0.44	0.55	0.6	1.0	0.07*3	1*3	1.15	0.1*3	3*3	7.4×10^{-15}
S5972	320 to 1000	800	0.57			0.55	0.42	0.01*3	0.5*3		0.5*3		3.1×10^{-15}
S5973		760	0.52		0.51	0.47	0.09	0.001*4	0.1*4		1*4	1.6*4	1.1×10^{-15} *4
S5973-01							0.42						
S5973-02			0.4	0.3*2	0.42	0.37	0.07						1.9×10^{-15} *2 *4

*1: Window material K: borosilicate glass, L: lens type borosilicate glass
*2: λ=410 nm
*3: V_R=10 V
*4: V_R=3.3 V

chanhvinh.com

Spectral response

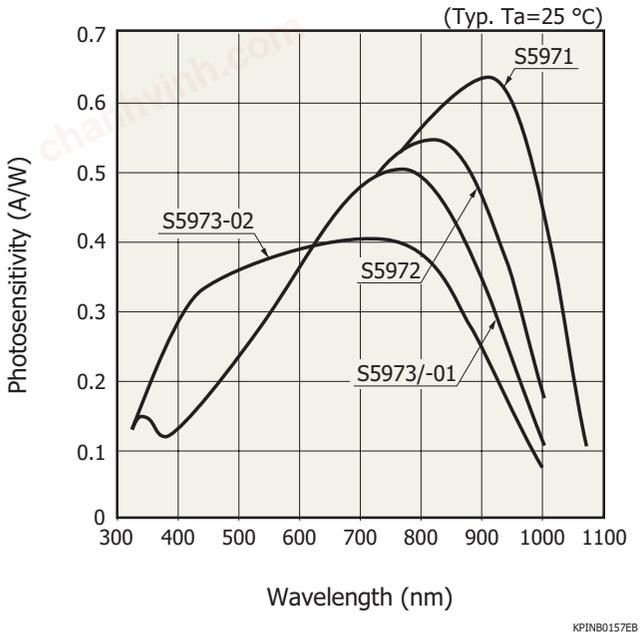

KPINB0157EB

Photosensitivity temperature characteristics

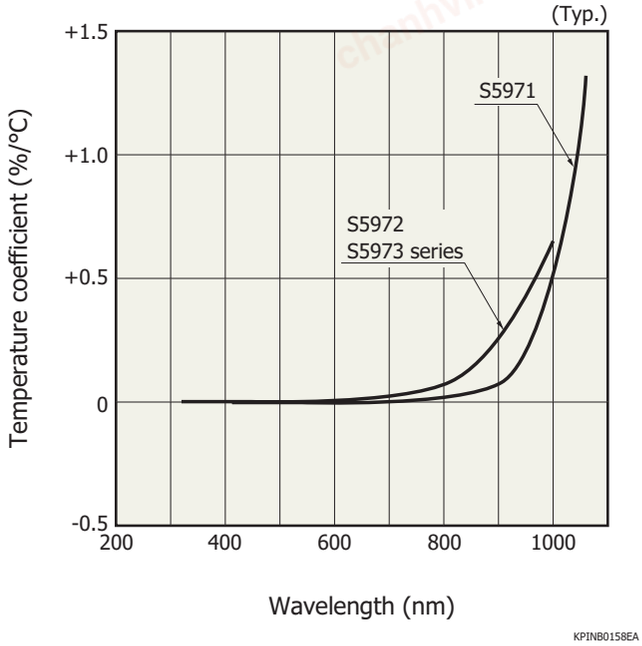

KPINB0158EA

Frequency response

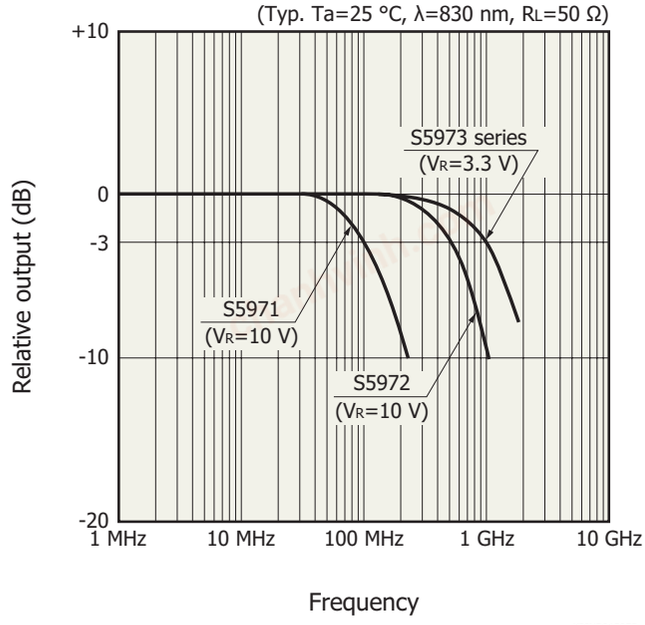

KPINB0159EB

Cutoff frequency vs. reverse voltage

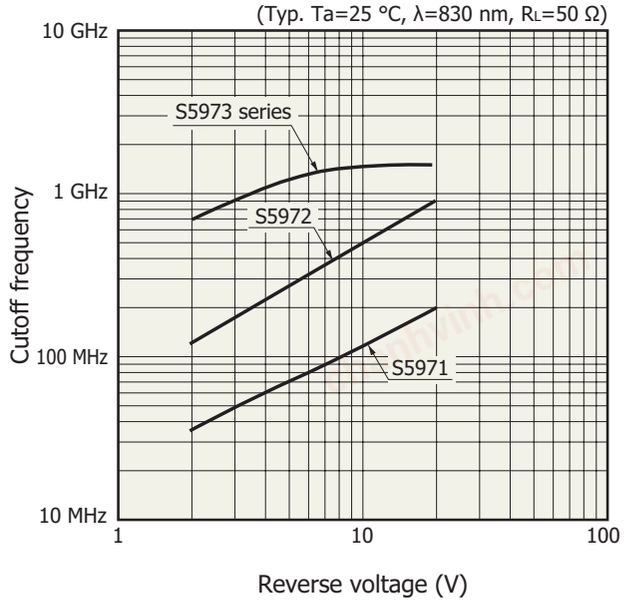

KPINB0160EC

chanhvinh.com

Dark current vs. reverse voltage

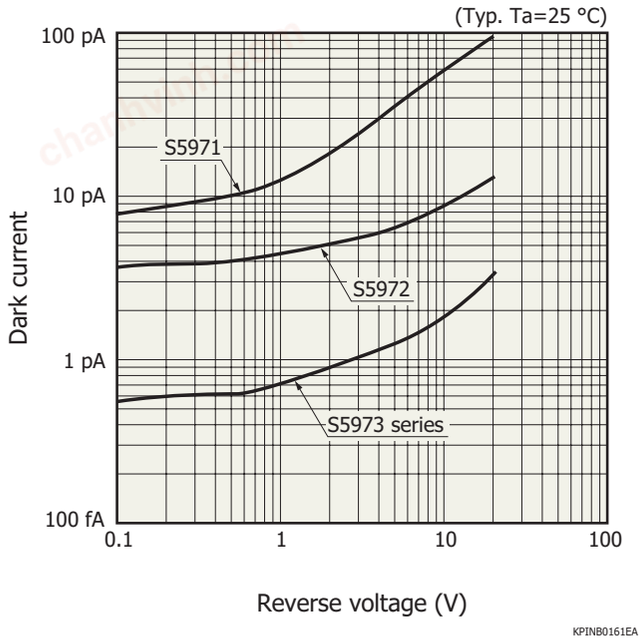

Terminal capacitance vs. reverse voltage

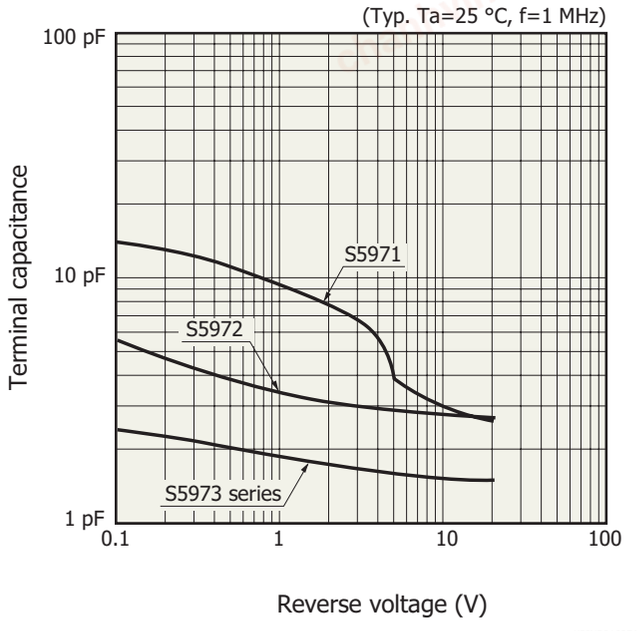

Fiber coupling characteristics (S5973-01)

X, Y direction

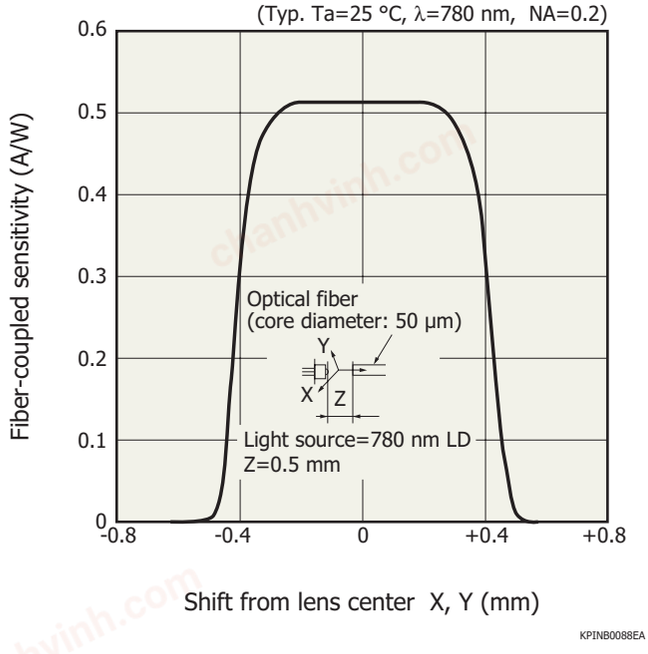

Z direction

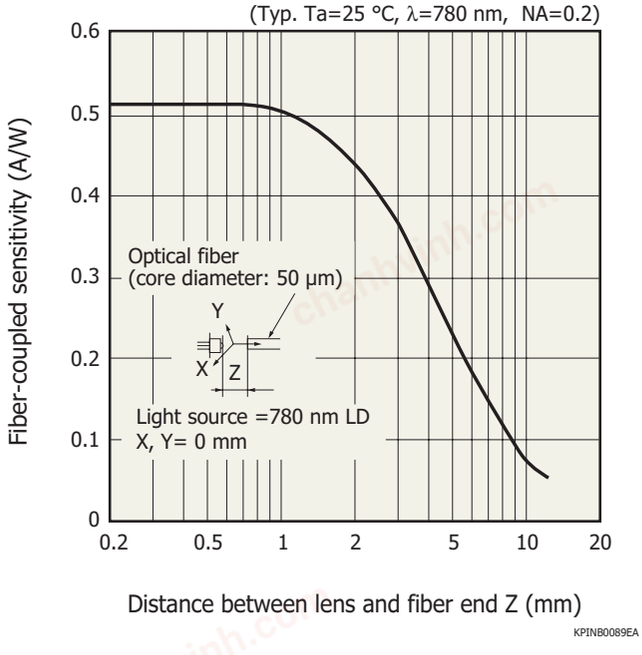

chanhvinh.com

Dimensional outlines (unit: mm)

① S5971, S5972, S5973

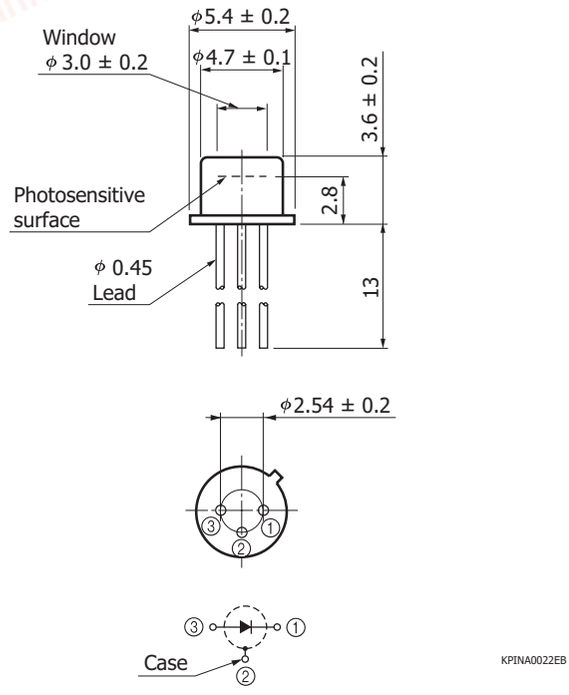

KPINA0022EB

② S5973-01

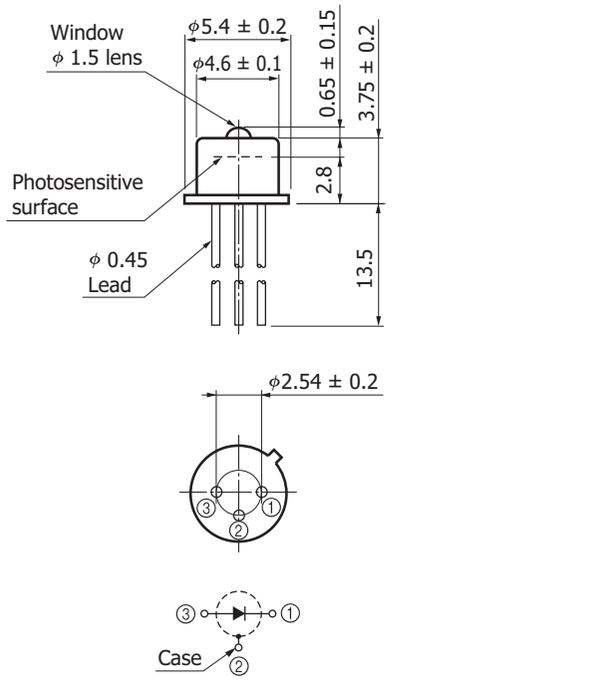

KPINA0023EA

③ S5973-02

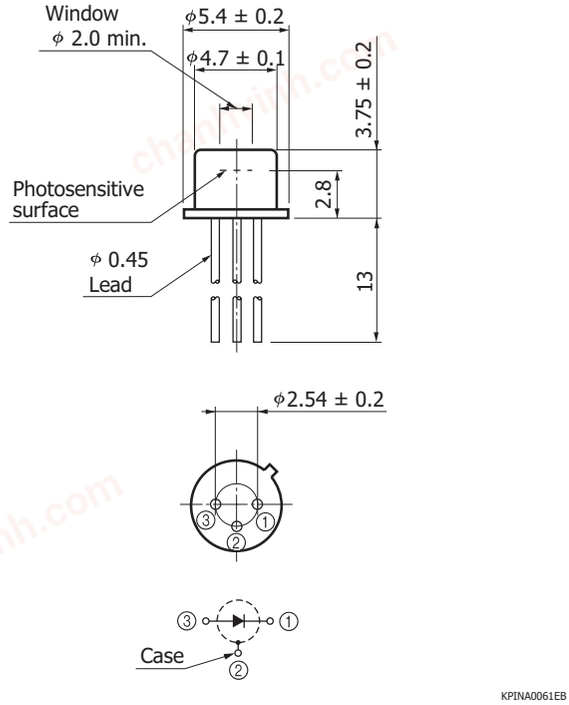

KPINA0061EB

chanhvinh.com

Related information

www.hamamatsu.com/sp/ssd/doc_en.html

■ Precautions
· Disclaimer
· Metal, ceramic, plastic package products

■ Technical information
· Si photodiode / Application circuit example

Information described in this material is current as of November, 2019.
Product specifications are subject to change without prior notice due to improvements or other reasons. This document has been carefully prepared and the information contained is believed to be accurate. In rare cases, however, there may be inaccuracies such as text errors. Before using these products, always contact us for the delivery specification sheet to check the latest specifications.
The product warranty is valid for one year after delivery and is limited to product repair or replacement for defects discovered and reported to us within that one year period. However, even if within the warranty period we accept absolutely no liability for any loss caused by natural disasters or improper product use.
Copying or reprinting the contents described in this material in whole or in part is prohibited without our prior permission.

HAMAMATSU www.hamamatsu.com

HAMAMATSU PHOTONICS K.K., Solid State Division
1126-1 Ichino-cho, Higashi-ku, Hamamatsu City, 435-8558 Japan, Telephone: (81)53-434-3311, Fax: (81)53-434-5184
U.S.A.: Hamamatsu Corporation: 360 Foothill Road, Bridgewater, N.J. 08807, U.S.A., Telephone: (1)908-231-0960, Fax: (1)908-231-1218, E-mail: usa@hamamatsu.com
Germany: Hamamatsu Photonics Deutschland GmbH: Arzbergerstr. 10, D-82211 Herrsching am Ammersee, Germany, Telephone: (49)8152-375-0, Fax: (49)8152-265-8, E-mail: info@hamamatsu.de
France: Hamamatsu Photonics France S.A.R.L.: 19, Rue du Saule Trapu, Parc du Moulin de Massy, 91882 Massy Cedex, France, Telephone: (33)1 69 53 71 00, Fax: (33)1 69 53 71 10, E-mail: infos@hamamatsu.fr
United Kingdom: Hamamatsu Photonics UK Limited: 2 Howard Court, 10 Tewin Road, Welwyn Garden City, Hertfordshire AL7 1BW, United Kingdom, Telephone: (44)1707-294888, Fax: (44)1707-325777, E-mail: info@hamamatsu.co.uk
North Europe: Hamamatsu Photonics Norden AB: Torshamnsgatan 35 16440 Kista, Sweden, Telephone: (46)8-509 031 00, Fax: (46)8-509 031 01, E-mail: info@hamamatsu.se
Italy: Hamamatsu Photonics Italia S.r.l.: Strada della Moia, 1 int. 6, 20020 Arese (Milano), Italy, Telephone: (39)02-93 58 17 33, Fax: (39)02-93 58 17 41, E-mail: info@hamamatsu.it
China: Hamamatsu Photonics (China) Co., Ltd.: B1201, Jiaming Center, No.27 Dongsanhuan Beilu, Chaoyang District, 100020 Beijing, P.R.China, Telephone: (86)10-6586-6006, Fax: (86)10-6586-2866, E-mail: hpc@hamamatsu.com.cn
Taiwan: Hamamatsu Photonics Taiwan Co., Ltd.: 8F-3, No. 158, Section2, Gongdao 5th Road, East District, Hsinchu, 300, Taiwan R.O.C. Telephone: (886)3-659-0080, Fax: (886)3-659-0081, E-mail: info@hamamatsu.com.tw

Cat. No. KPIN1025E10 Nov. 2019 DN