chanhvinh.com

HAMAMATSU
PHOTON IS OUR BUSINESS

Si photodiodes

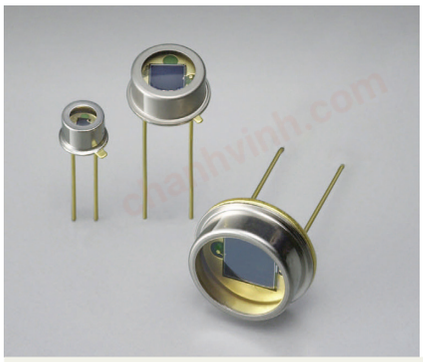

S1336 series

UV to near IR for precision photometry

These Si photodiodes have sensitivity in the UV to near IR range. They are suitable for low-light-level detection in analysis and the like.

Features

- **High sensitivity in UV range**
- **Low capacitance**
- **High reliability**

Applications

- **Analytical instruments**
- **Optical measurement equipment**

Structure / Absolute maximum ratings

Type no.	Dimensional outline/ Window material*1	Package	Photosensitive area size (mm)	Absolute maximum ratings		
				Reverse voltage VR max (V)	Operating temperature*2 Topr (°C)	Storage temperature*2 Tstg (°C)
S1336-18BQ*3	(1)/Q	TO-18	1.1 × 1.1	5	-20 to +60	-55 to +80
S1336-18BK	(2)/K				-40 to +100	-55 to +125
S1336-5BQ*3	(3)/Q	TO-5	2.4 × 2.4		-20 to +60	-55 to +80
S1336-5BK	(4)/K				-40 to +100	-55 to +125
S1336-44BQ*3	(5)/Q		3.6 × 3.6		-20 to +60	-55 to +80
S1336-44BK	(6)/K				-40 to +100	-55 to +125
S1336-8BQ*3	(7)/Q	TO-8	5.8 × 5.8		-20 to +60	-55 to +80
S1336-8BK	(8)/K				-40 to +100	-55 to +125

*1: Window material K=borosilicate glass, Q=quartz glass
*2: No dew condensation
When there is a temperature difference between a product and the surrounding area in high humidity environments, dew condensation may occur on the product surface. Dew condensation may cause deterioration in characteristics and reliability.
*3: Refer to "Precautions against UV light exposure."
Note: Exceeding the absolute maximum ratings even momentarily may cause a drop in product quality. Always be sure to use the product within the absolute maximum ratings.

Electrical and optical characteristics (Typ. Ta=25 °C, unless otherwise noted)

Type no.	Spectral response range λ (nm)	Peak sensitivity wavelength λp (nm)	Photosensitivity S (A/W)				Short circuit current Isc 100 lx		Dark current ID VR=10 mV max. (pA)	Temp. coefficient of ID TCID (times/°C)	Rise time tr VR=0 V RL=1 kΩ (µs)	Terminal capacitance Ct VR=0 V f=10 kHz (pF)	Shunt resistance Rsh VR=10 mV		Noise equivalent power NEP (W/Hz$^{1/2}$)
			λp	200 nm		He-Ne laser 633 nm	Min. (µA)	Typ. (µA)					Min. (GΩ)	Typ. (GΩ)	
				Min.	Typ.										
S1336-18BQ	190 to 1100	960	0.5	0.10	0.12	0.33	1	1.2	20	1.15	0.1	20	0.5	2	5.7×10^{-15}
S1336-18BK	320 to 1100			-	-		0.9	1.0							
S1336-5BQ	190 to 1100			0.10	0.12		4	5	30		0.2	65	0.3	1	8.1×10^{-15}
S1336-5BK	320 to 1100			-	-										
S1336-44BQ	190 to 1100			0.10	0.12		8	10	50		0.5	150	0.2	0.6	1.0×10^{-14}
S1336-44BK	320 to 1100			-	-										
S1336-8BQ	190 to 1100			0.10	0.12		22	28	100		1	380	0.1	0.4	1.3×10^{-14}
S1336-8BK	320 to 1100			-	-										

chanhvinh.com

Spectral response

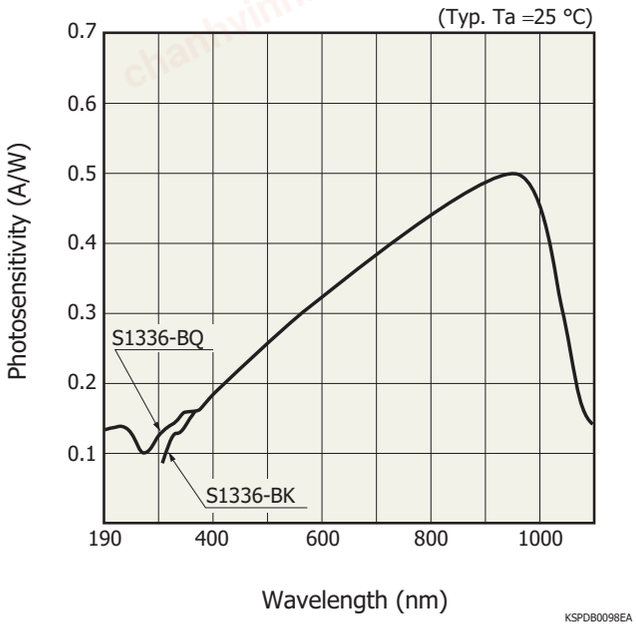

Photosensitivity temperature characteristics

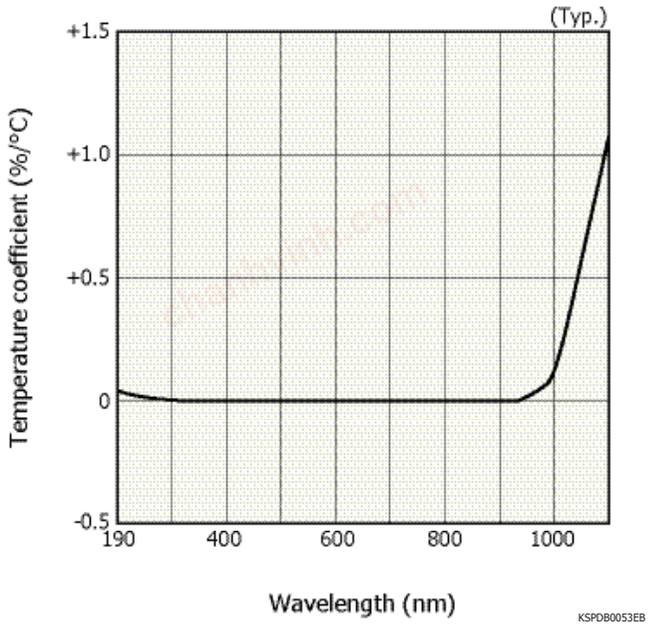

Dark current vs. reverse voltage

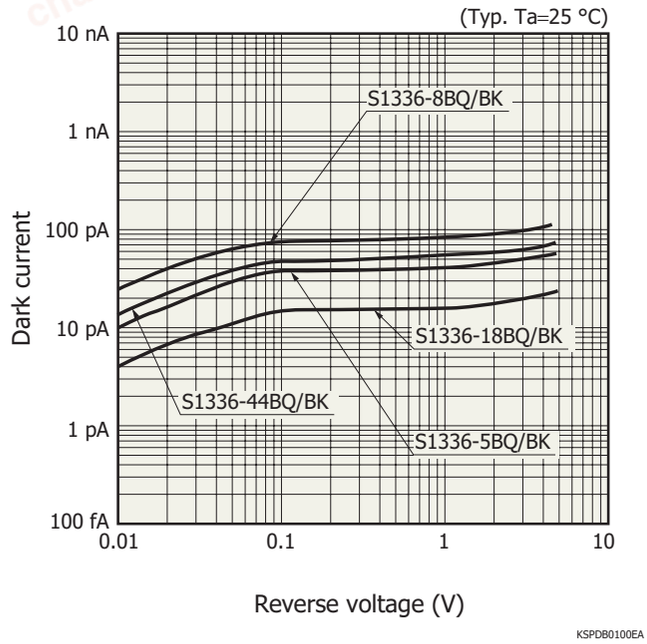

chanhvinh.com

Dimensional outlines (unit: mm)

(1) S1336-18BQ

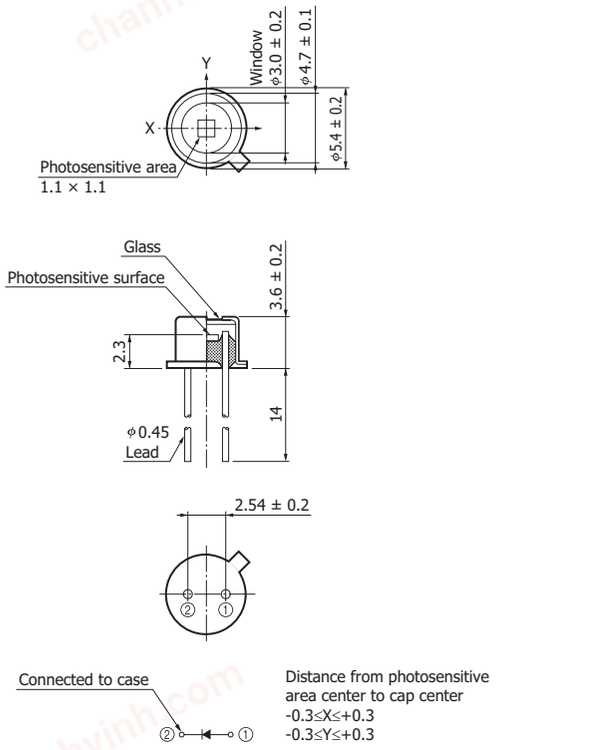

Distance from photosensitive area center to cap center
-0.3≤X≤+0.3
-0.3≤Y≤+0.3

KSPDA0197EC

(2) S1336-18BK

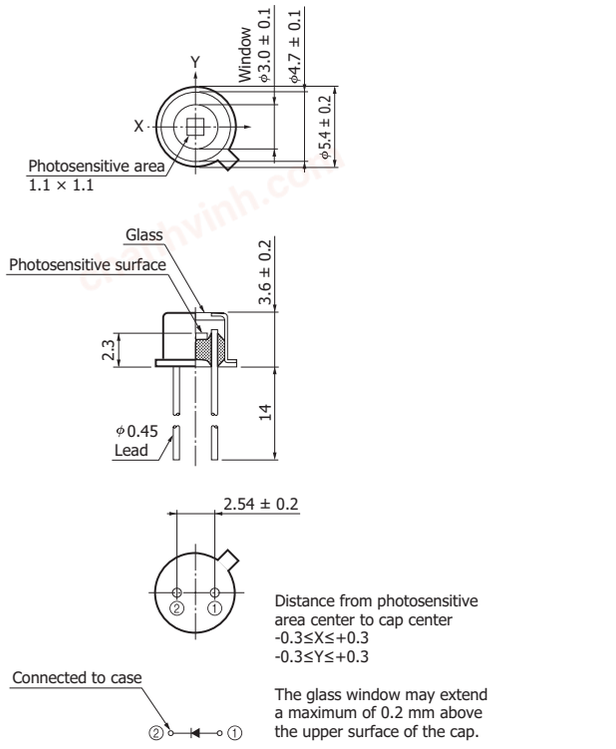

Distance from photosensitive area center to cap center
-0.3≤X≤+0.3
-0.3≤Y≤+0.3

The glass window may extend a maximum of 0.2 mm above the upper surface of the cap.

KSPDA0191EC

(3) S1336-5BQ

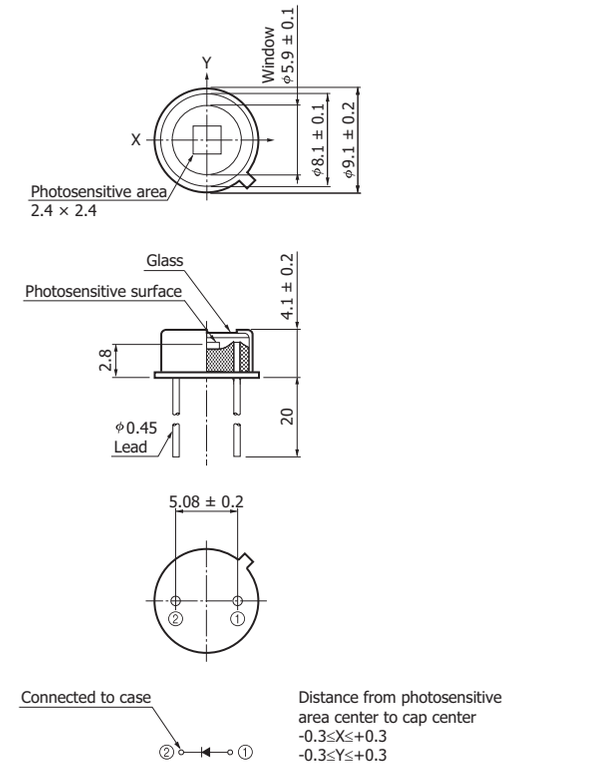

Distance from photosensitive area center to cap center
-0.3≤X≤+0.3
-0.3≤Y≤+0.3

KSPDA0198EB

(4) S1336-5BK

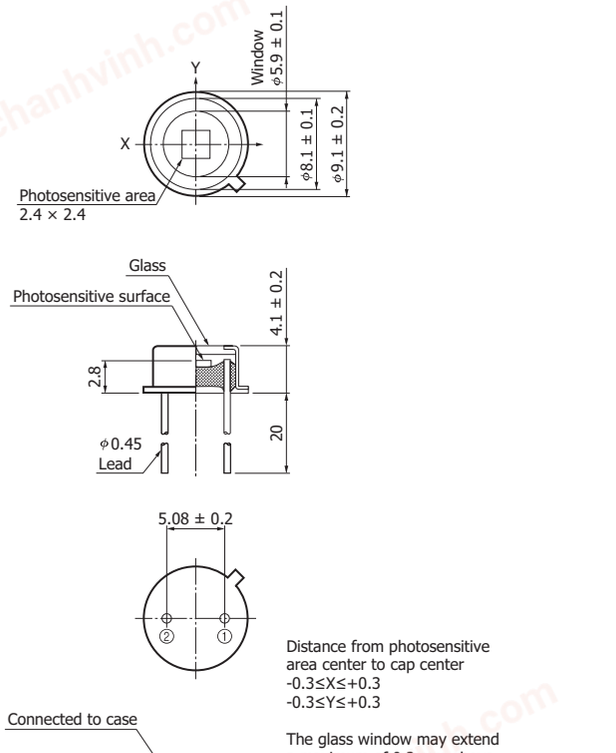

Distance from photosensitive area center to cap center
-0.3≤X≤+0.3
-0.3≤Y≤+0.3

The glass window may extend a maximum of 0.2 mm above the upper surface of the cap.

KSPDA0192EC

chanhvinh.com

(5) S1336-44BQ

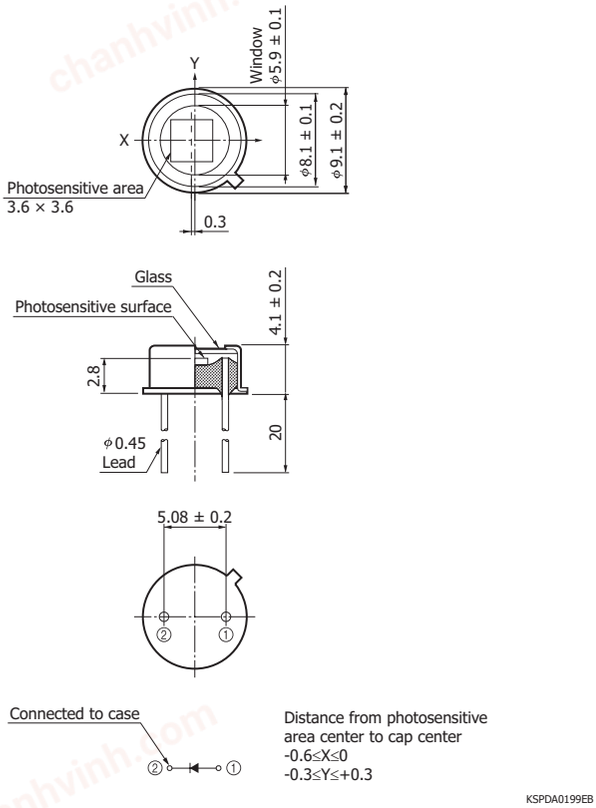

Distance from photosensitive area center to cap center
-0.6≤X≤0
-0.3≤Y≤+0.3

KSPDA0199EB

(6) S1336-44BK

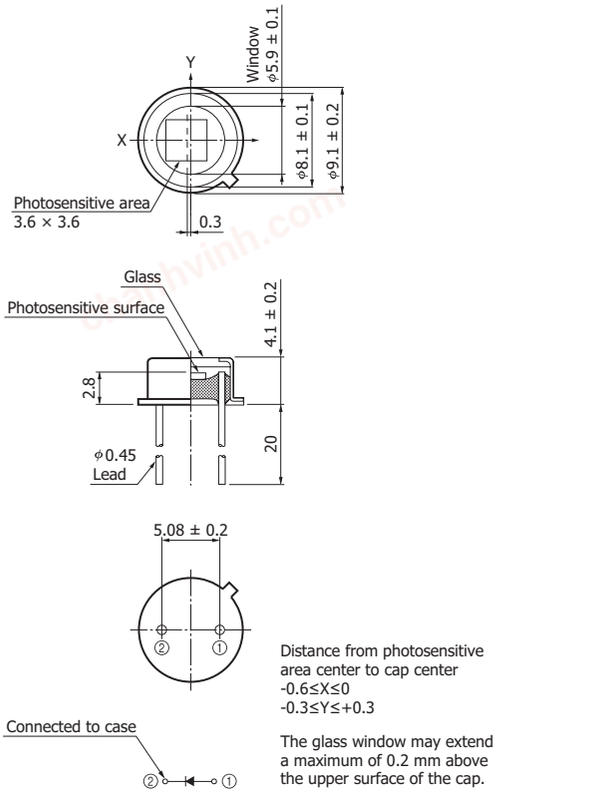

Distance from photosensitive area center to cap center
-0.6≤X≤0
-0.3≤Y≤+0.3

The glass window may extend a maximum of 0.2 mm above the upper surface of the cap.

KSPDA0194EC

chanhvinh.com

(7) S1336-8BQ

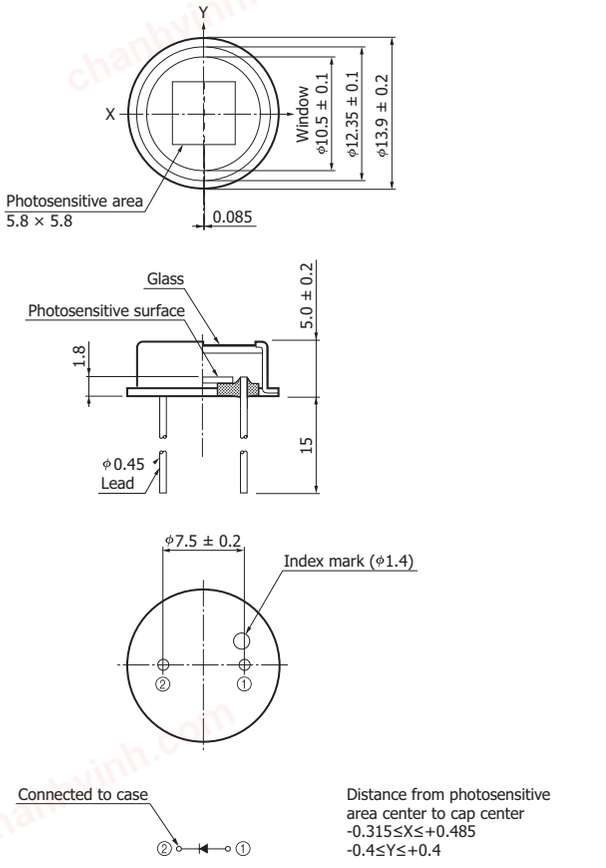

KSPDA0200EC

(8) S1336-8BK

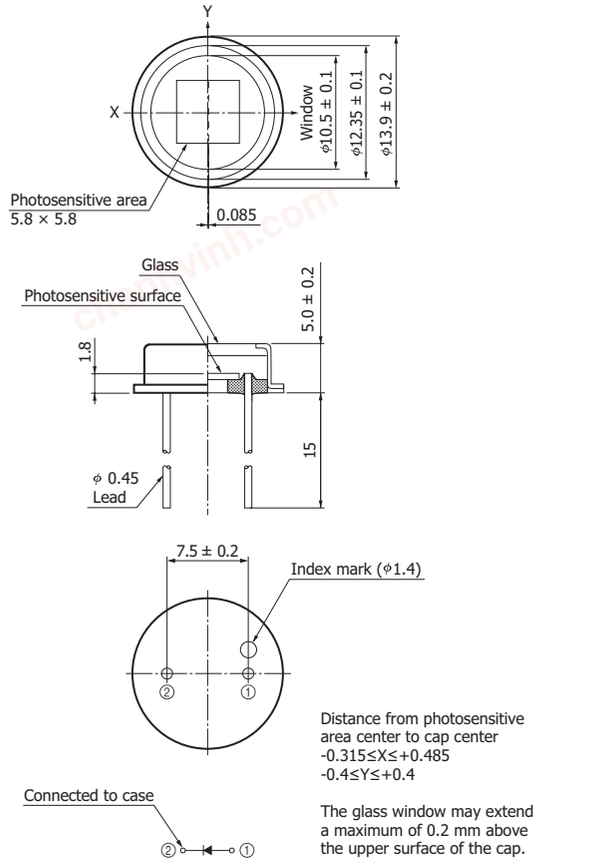

KSPDA0193EC

Precautions against UV light exposure

· When UV light irradiation is applied, the product characteristics may degrade. Such examples include degradation of the product's UV sensitivity and increase in dark current. This phenomenon varies depending on the irradiation level, irradiation intensity, usage time, and ambient environment and also varies depending on the product model. Before employing the product, we recommend that you check the tolerance under the ultraviolet light environment that the product will be used in.

· Exposure to UV light may cause the characteristics to degrade due to gas released from the resin bonding the product's component materials. As such, we recommend that you avoid applying UV light directly on the resin and apply it on only the inside of the photosensitive area by using an aperture or the like.

chanhvinh.com

Related information

www.hamamatsu.com/sp/ssd/doc_en.html

■ Precautions

· Disclaimer
· Metal, ceramic, plastic package products

■ Technical note

· Si photodiodes

Information described in this material is current as of July 2023.
Product specifications are subject to change without prior notice due to improvements or other reasons. This document has been carefully prepared and the information contained is believed to be accurate. In rare cases, however, there may be inaccuracies such as text errors. Before using these products, always contact us for the delivery specification sheet to check the latest specifications.
The product warranty is valid for one year after delivery and is limited to product repair or replacement for defects discovered and reported to us within that one year period. However, even if within the warranty period we accept absolutely no liability for any loss caused by natural disasters or improper product use.
Copying or reprinting the contents described in this material in whole or in part is prohibited without our prior permission.

HAMAMATSU

www.hamamatsu.com

HAMAMATSU PHOTONICS K.K., Solid State Division
1126-1 Ichino-cho, Higashi-ku, Hamamatsu City, 435-8558 Japan, Telephone: (81)53-434-3311, Fax: (81)53-434-5184
U.S.A.: HAMAMATSU CORPORATION: 360 Foothill Road, Bridgewater, NJ 08807, U.S.A., Telephone: (1)908-231-0960, Fax: (1)908-231-1218
Germany: HAMAMATSU PHOTONICS DEUTSCHLAND GMBH: Arzbergerstr. 10, 82211 Herrsching am Ammersee, Germany, Telephone: (49)8152-375-0, Fax: (49)8152-265-8 E-mail: info@hamamatsu.de
France: HAMAMATSU PHOTONICS FRANCE S.A.R.L.: 19 Rue du Saule Trapu, Parc du Moulin de Massy, 91882 Massy Cedex, France, Telephone: (33)1 69 53 71 00, Fax: (33)1 69 53 71 10 E-mail: infos@hamamatsu.fr
United Kingdom: HAMAMATSU PHOTONICS UK LIMITED: 2 Howard Court,10 Tewin Road, Welwyn Garden City, Hertfordshire, AL7 1BW, UK, Telephone: (44)1707-294888, Fax: (44)1707-325777 E-mail: info@hamamatsu.co.uk
North Europe: HAMAMATSU PHOTONICS NORDEN AB: Torshamnsgatan 35, 16440 Kista, Sweden, Telephone: (46)8-509-031-00, Fax: (46)8-509-031-01 E-mail: info@hamamatsu.se
Italy: HAMAMATSU PHOTONICS ITALIA S.R.L.: Strada della Moia, 1 int. 6 20044 Arese (Milano), Italy, Telephone: (39)02-93 58 17 33, Fax: (39)02-93 58 17 41 E-mail: info@hamamatsu.it
China: HAMAMATSU PHOTONICS (CHINA) CO., LTD.: 1201, Tower B, Jiaming Center, 27 Dongsanhuan Beilu, Chaoyang District, 100020 Beijing, P.R. China, Telephone: (86)10-6586-6006, Fax: (86)10-6586-2866 E-mail: hpc@hamamatsu.com.cn
Taiwan: HAMAMATSU PHOTONICS TAIWAN CO., LTD.: 13F-1, No.101, Section 2, Gongdao 5th Road, East Dist., Hsinchu City, 300046, Taiwan(R.O.C) Telephone: (886)3-659-0080, Fax: (886)3-659-0081 E-mail: info@hamamatsu.com.tw

Cat. No. KSPD1022E09 Jul. 2023 DN