chanhvinh.com

HAMAMATSU
PHOTON IS OUR BUSINESS

# InGaAs PIN photodiodes

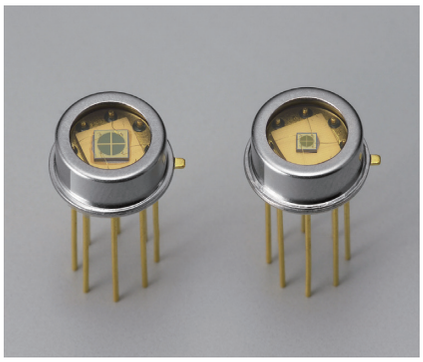

## G6849 series

## Quadrant type

### Features

- **Photosensitive area**
  **G6849 : ϕ2 mm quadrant element**
  **G6849-01: ϕ1 mm quadrant element**
- **Low noise**
- **High reliability**

### Applications

- **Light spot position detection**
- **Measurement equipment**

### Structure

| Parameter | G6849 | G6849-01 | Unit |
|---|---|---|---|
| Photosensitive area | ϕ2/quadrant | ϕ1/quadrant | mm |
| Number of elements | 4 | | - |
| Package | TO-5 | | - |
| Window material | Borosilicate glass | | - |

### Absolute maximum ratings (Ta=25 °C)

| Parameter | Symbol | Value | Unit |
|---|---|---|---|
| Reverse voltage | $V_R$ | 5 | V |
| Operating temperature*1 | Topr | -40 to +85 | °C |
| Storage temperature*1 | Tstg | -55 to +125 | °C |
| Soldering condition | - | 260 °C or less, within 10 s | - |

*1: No dew condensation
When there is a temperature difference between a product and the surrounding area in high humidity environments, dew condensation may occur on the product surface. Dew condensation on the product may cause deterioration in characteristics and reliability.

Note: Exceeding the absolute maximum ratings even momentarily may cause a drop in product quality. Always be sure to use the product within the absolute maximum ratings.

### Electrical and optical characteristics (Ta=25 °C, per 1 element)

| Parameter | Symbol | Condition | G6849 | | | G6849-01 | | | Unit |
|---|---|---|---|---|---|---|---|---|---|
| | | | Min. | Typ. | Max. | Min. | Typ. | Max. | |
| Spectral response range | λ | | - | 0.9 to 1.7 | - | - | 0.9 to 1.7 | - | μm |
| Peak sensitivity wavelength | λp | | - | 1.55 | - | - | 1.55 | - | μm |
| Photosensitivity | S | λ=1.3 μm | 0.8 | 0.9 | - | 0.8 | 0.9 | - | A/W |
| | | λ=1.55 μm | 0.85 | 0.95 | - | 0.85 | 0.95 | - | |
| Dark current | $I_D$ | $V_R$=1 V | - | 0.5 | 5 | - | 0.15 | 1.5 | nA |
| Temperature coefficient of $I_D$ | $\Delta T_{ID}$ | $V_R$=1 V | - | 1.09 | - | - | 1.09 | - | times/°C |
| Cutoff frequency | fc | $V_R$=1 V, $R_L$=50 Ω λ=1.3 μm, -3 dB | 15 | 30 | - | 80 | 120 | - | MHz |
| Terminal capacitance | Ct | $V_R$=1 V, f=1 MHz | - | 100 | 160 | - | 25 | 40 | pF |
| Shunt resistance | Rsh | $V_R$=10 mV | 10 | 50 | - | 80 | 200 | - | MΩ |
| Detectivity | D* | λ=λp | $1 \times 10^{12}$ | $5 \times 10^{12}$ | - | $1 \times 10^{12}$ | $5 \times 10^{12}$ | - | cm·Hz$^{1/2}$/W |
| Noise equivalent power | NEP | λ=λp | - | $2 \times 10^{-14}$ | $6 \times 10^{-14}$ | - | $1 \times 10^{-14}$ | $4 \times 10^{-14}$ | W/Hz$^{1/2}$ |

The G6849 series may be damaged by Electro Static Discharge. Be carefull when using the G6849 series.

chanhvinh.com



## Spectral response

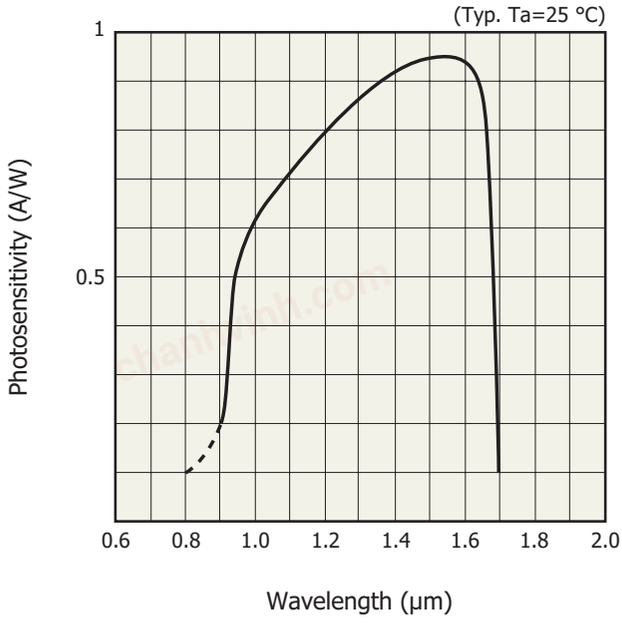


KKIRDB0002EB

## Photosensitivity temperature characteristics

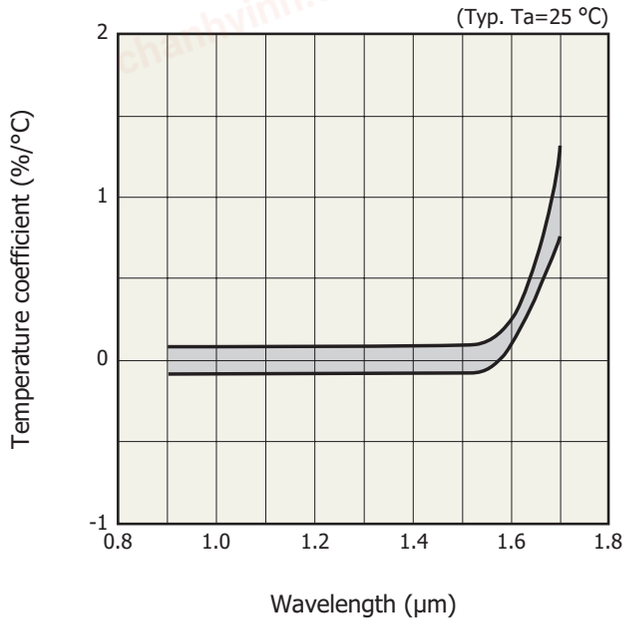


KIRDB0042EA

## Dark current vs. reverse voltage

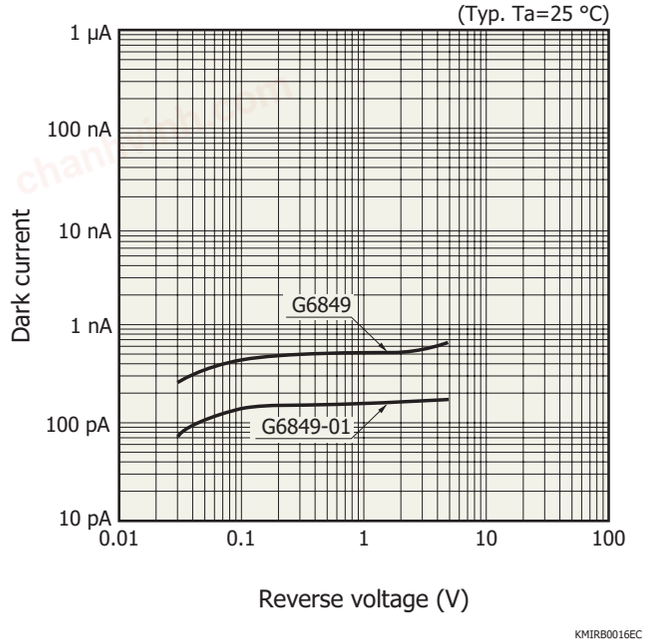


KMIRB0016EC

## Terminal capacitance vs. reverse voltage

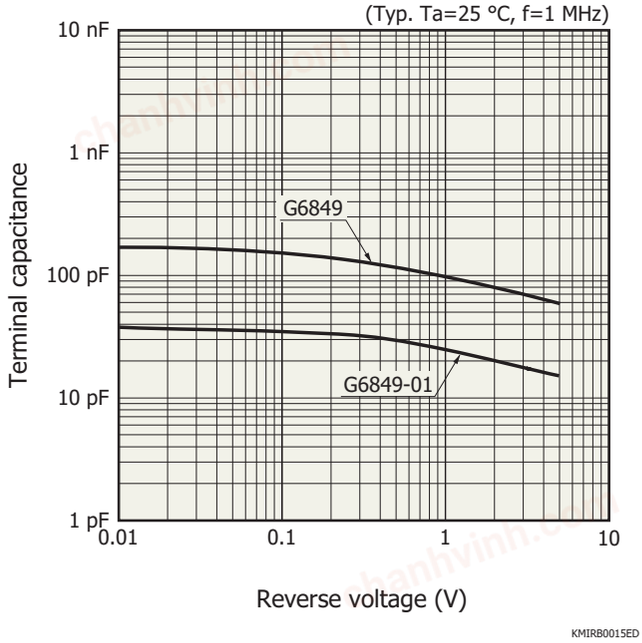


KMIRB0015ED

chanhvinh.com



## Shunt resistance vs. ambient temperature

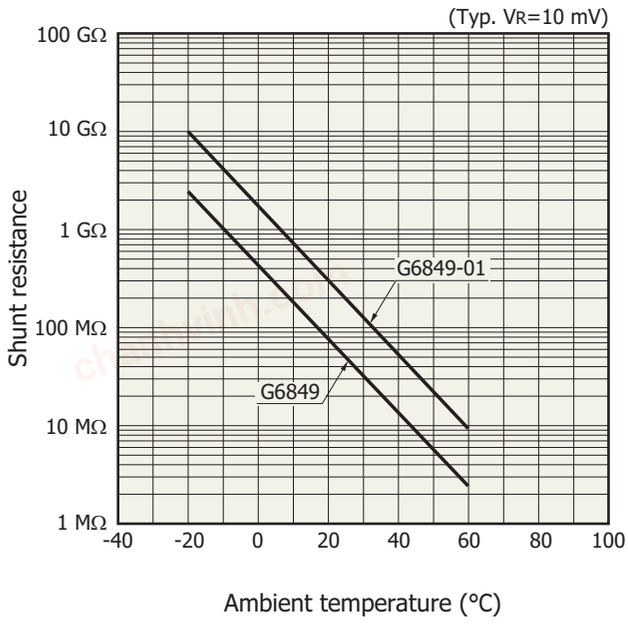


KMIRB0014EA

## Dimensional outlines (unit: mm)

### G6849

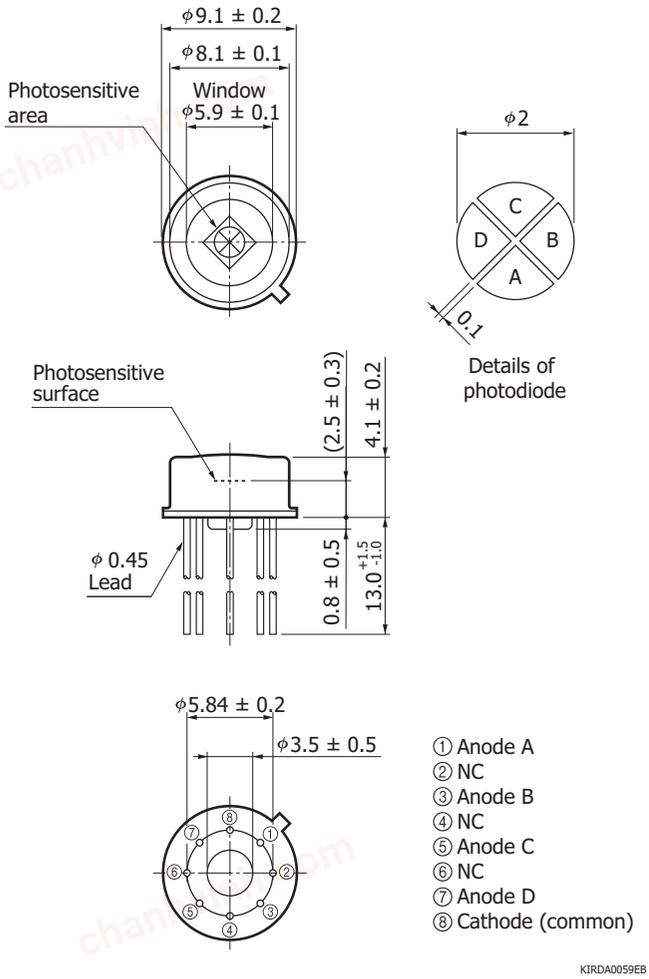


KIRDA0059EB

### G6849-01

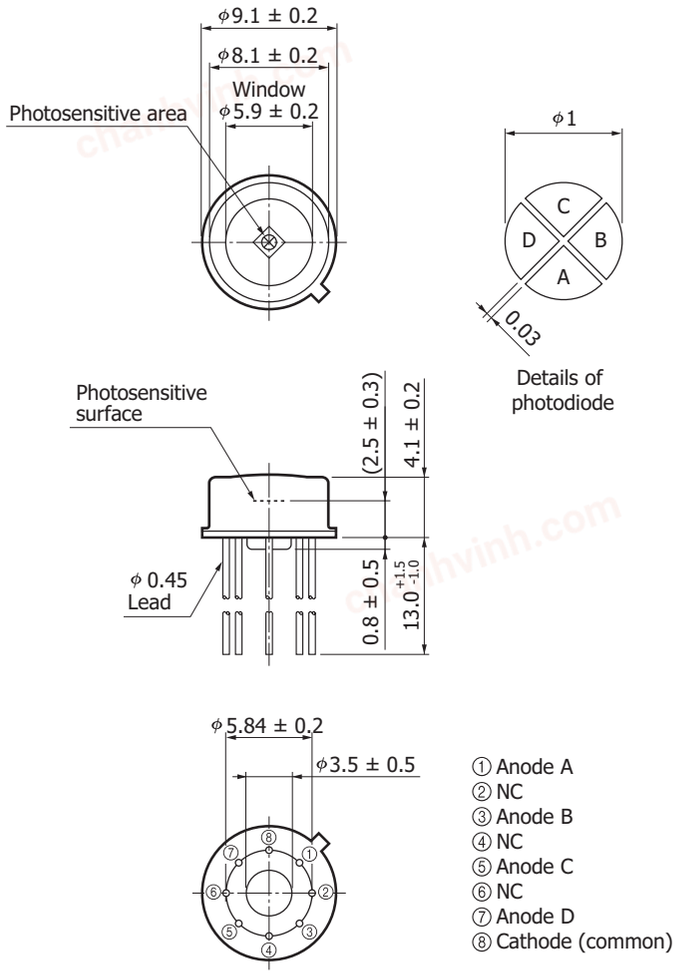


KIRDA0143EB

chanhvinh.com



## Related information

www.hamamatsu.com/sp/ssd/doc_en.html

■ Precautions
- Notice
- Metal, ceramic, plastic products

■ Technical information
- Compound semiconductor photosensors / Technical note

Information described in this material is current as of July, 2021.
Product specifications are subject to change without prior notice due to improvements or other reasons. This document has been carefully prepared and the information contained is believed to be accurate. In rare cases, however, there may be inaccuracies such as text errors. Before using these products, always contact us for the delivery specification sheet to check the latest specifications.
The product warranty is valid for one year after delivery and is limited to product repair or replacement for defects discovered and reported to us within that one year period. However, even if within the warranty period we accept absolutely no liability for any loss caused by natural disasters or improper product use.
Copying or reprinting the contents described in this material in whole or in part is prohibited without our prior permission.

HAMAMATSU

www.hamamatsu.com

HAMAMATSU PHOTONICS K.K., Solid State Division
1126-1 Ichino-cho, Higashi-ku, Hamamatsu City, 435-8558 Japan, Telephone: (81)53-434-3311, Fax: (81)53-434-5184
U.S.A.: Hamamatsu Corporation: 360 Foothill Road, Bridgewater, N.J. 08807, U.S.A., Telephone: (1)908-231-0960, Fax: (1)908-231-1218, E-mail: usa@hamamatsu.com
Germany: Hamamatsu Photonics Deutschland GmbH: Arzbergerstr. 10, D-82211 Herrsching am Ammersee, Germany, Telephone: (49)8152-375-0, Fax: (49)8152-265-8, E-mail: info@hamamatsu.de
France: Hamamatsu Photonics France S.A.R.L.: 19, Rue du Saule Trapu, Parc du Moulin de Massy, 91882 Massy Cedex, France, Telephone: (33)1 69 53 71 00, Fax: (33)1 69 53 71 10, E-mail: infos@hamamatsu.fr
United Kingdom: Hamamatsu Photonics UK Limited: 2 Howard Court, 10 Tewin Road, Welwyn Garden City, Hertfordshire AL7 1BW, UK, Telephone: (44)1707-294888, Fax: (44)1707-325777, E-mail: info@hamamatsu.co.uk
North Europe: Hamamatsu Photonics Norden AB: Torshamnsgatan 35 16440 Kista, Sweden, Telephone: (46)8-509 031 00, Fax: (46)8-509 031 01, E-mail: info@hamamatsu.se
Italy: Hamamatsu Photonics Italia S.r.l.: Strada della Moia, 1 int. 6, 20044 Arese (Milano), Italy, Telephone: (39)02-93 58 17 33, Fax: (39)02-93 58 17 41, E-mail: info@hamamatsu.it
China: Hamamatsu Photonics (China) Co., Ltd.: 1201 Tower B, Jiaming Center, 27 Dongsanhuan Beilu, Chaoyang District, 100020 Beijing, P.R.China, Telephone: (86)10-6586-6006, Fax: (86)10-6586-2866, E-mail: hpc@hamamatsu.com.cn
Taiwan: Hamamatsu Photonics Taiwan Co., Ltd.: 8F-3, No. 158, Section2, Gongdao 5th Road, East District, Hsinchu, 300, Taiwan R.O.C. Telephone: (886)3-659-0080, Fax: (886)3-659-0081, E-mail: info@hamamatsu.com.tw

Cat. No. KIRD1042E06 Jul. 2021 DN