chanhvinh.com

Warning Streamers • woven, embroidered with lettering "Remove Before Flight"

EH 4217.



Product Description

Key holder in the look of a warning flag with cult status. The red "Remove Before Flight" tag, popular with airline pilots, has a high-quality finish and is always an eye-catcher. It is embroidered with "Remove Before Flight" on the front and the Halder logo on the back.

Material

Flag
- Textile polyest, red RAL 3020

Eyelet
- Brass, nickel-plated

Key ring
- Alloy steel, nickel-plated

More information

Notes

Further information on request.

Further products

- Ball Lock Pins with Button Handle, single acting - comply with NAS / MS17984
- Ball Lock Pins with T-Handle, single acting - comply with NAS / MS17985
- Ball Lock Pins with L-handle, single acting - comply with NAS / MS17986
- Ball Lock Pins with Ring Handle, single acting - comply with NAS / MS17987
- Warning Streamers, according to NAS1756
- Warning Streamers, red, with "Remove Before Flight" lettering on one side and reflector on both sides
- Warning Streamers, red, with lettering "Remove Before Flight" on one side
- Warning Streamers, luminous orange, with "Remove Before Flight" lettering and reflector on both sides
- Warning Streamers, red, with "Remove Before Flight" lettering and reflector on both sides
- Warning Streamers, orange, with "Remove Before Flight" lettering and two reflective strips on both sides
- Warning Streamers, red, with reflective "Remove Before Flight" lettering and two reflective strips on both sides
- Warning Streamers, luminous green, reflective, with "Remove Before Flight" lettering on both sides
- Warning Streamers, luminous orange, reflective, with "Remove Before Flight" lettering on both sides
- Warning Streamers, red, with "Remove Before Flight" lettering and two reflective strips on both sides

chanhvinh.com

Drawing

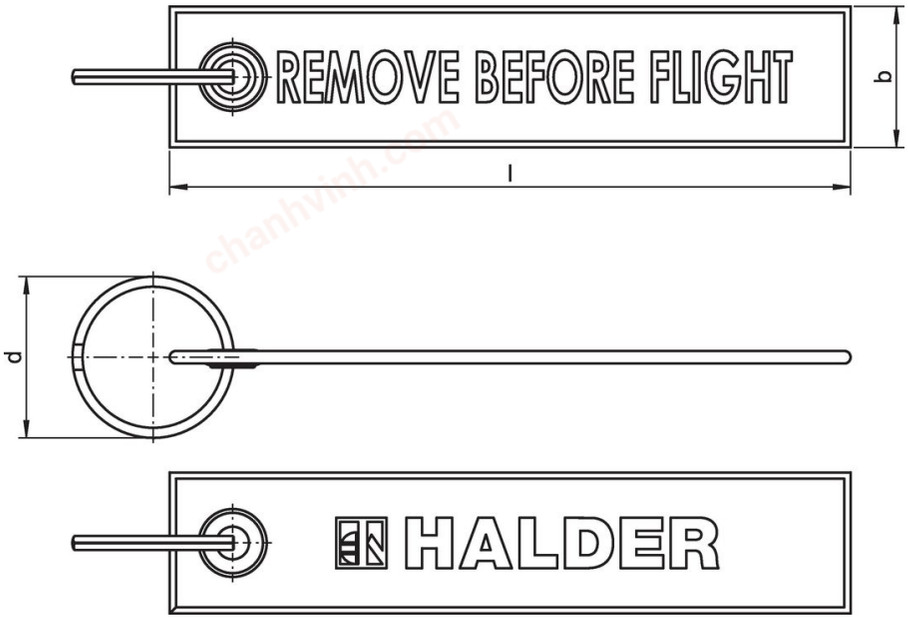

Order information

Dimensions				Art. No.
l ~	b ~	d ~		
[mm]			[g]	
135	28	30	8.6	4217.B004

Compliance

RoHS-compliant
Compliant with Directive 2011/65/EU [RoHS].

Does not contain SVHC substances
No SVHC substances with more than 0.1% w/w contained - SVHC list [REACH] as of 04.02.2026.

SCIP-code
N/A

Does not contain Proposition 65 substances
No Proposition 65 substances included.
https://www.P65Warnings.ca.gov/

Free from Conflict Minerals
This product does not contain any substances designated as "conflict minerals" such as tantalum, tin, gold or tungsten from the Democratic Republic of Congo or adjacent countries.

POP-compliant
Contains no persistent organic pollutants – Stockholm Convention [POP] as of September 2025.

PFAS-compliant
Contains no per- and polyfluoroalkyl substances (PFAS).

TSCA-compliant
Agent concentration in this product does not exceed the specified threshold.