chanhvinh.com

Ball Lock Pins • single acting - comply with NAS / MS17987

EH 4213.



Product Description

Ball Lock Pins according to MS17987 / NAS1333-1343 are used for quick fastening, locking, adjusting, changing and securing. Quickly and easily unlockable for frequently repeated connections.
Ball Lock Pins (Quick Release Pins) are produced according to Aviation Norm MS / NAS and tested according to NAS 1332.
Protective treatment:
- All CRES parts are passivated according AMS2700

Heat treatment:
- Body: Rc. 40 min. (AMS2759, Condition H900)
- Spindle: Rc. 40 min. (AMS2759, Condition H900)
- Ball: Rc. 58-62 min. (AMS2759)

Material

Body
- Stainless steel, precipitation-hardened, passivated - CRES 17-4PH (specification AMS5643)

Spindle
- Stainless steel, precipitation-hardened, passivated - CRES 17-4PH (specification AMS5643)

Spring
- Stainless steel, passivated - CRES 302 (specification ASTM-A-313)

Handle
- Stainless steel, passivated - CRES 17-4PH (specification AMS5643)

Attaching ring
- Stainless steel, passivated - CRES 302 (specification ASTM A-313/A313M)

Press button
- Stainless steel, passivated - CRES 303 (specification ASTM A484/484M)

Ball
- Stainless steel, precipitation-hardened, passivated - CRES 440C (specification AMS5630)

Operation

Ball lock pins single acting are self-locking and require a push of the button to release the balls.

More information

Notes

All further dimensions are available on request.
Other diameter / length combinations not listed which comply with the standard can be produced at short notice on customer request.
Customized design on request.
- This product is manufactured in INCH dimensions.

Drawing

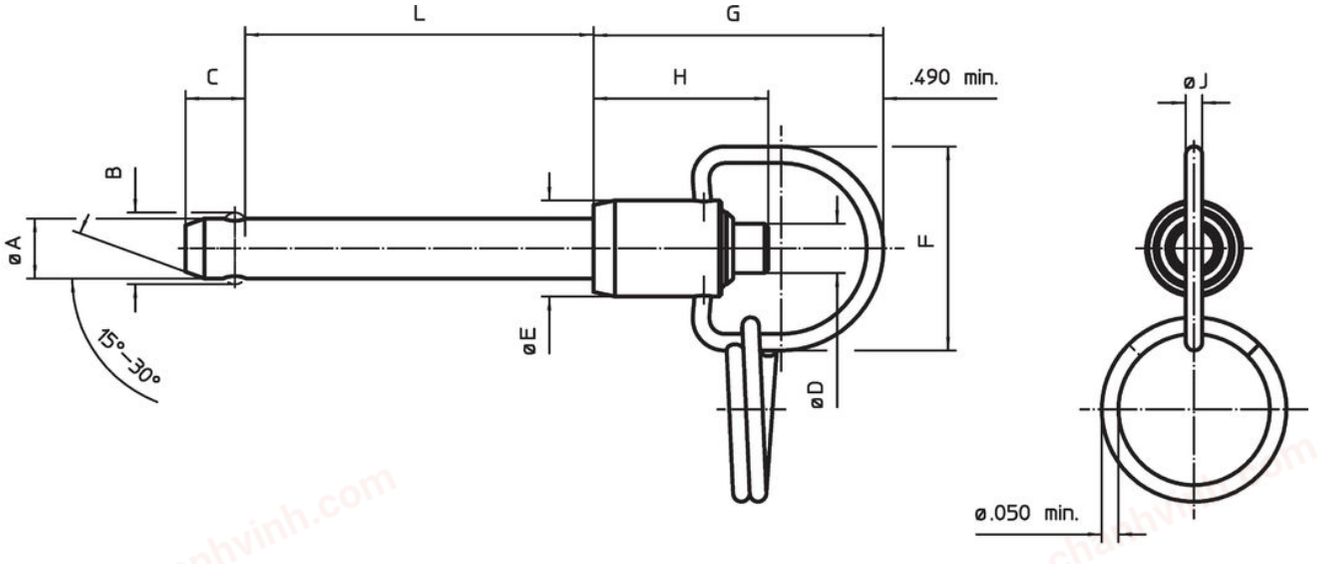

chanhvinh.com

Order information

Dimensions												Shearing resistance, two-shear				Standard	NSN (National Stock Number)	Art. No.
Nominal diameter A	A min.	A max.	Clamping length L +0.02 0	B ±0.005	C 0 -0.04	D max.	E max.	F min.	G max.	H min.	J min.	min.	min.	max.				
[in]												[lbf]	[°F]		[g]			
3/16	0.1870	0.1885	**0.3**	0.220	0.260	0.310	0.53	1.06	1.45	0.73	0.08	5,150	-65	200	20.0	MS17987C303 / NAS1333C6C03D	–	4213.A03
3/16	0.1870	0.1885	**0.4**	0.220	0.260	0.310	0.53	1.06	1.45	0.73	0.08	5,150	-65	200	20.5	MS17987C304 / NAS1333C6C04D	–	4213.A04
3/16	0.1870	0.1885	**0.5**	0.220	0.260	0.310	0.53	1.06	1.45	0.73	0.08	5,150	-65	200	21.0	MS17987C305 / NAS1333C6C05D	–	4213.A05
3/16	0.1870	0.1885	**0.6**	0.220	0.260	0.310	0.53	1.06	1.45	0.73	0.08	5,150	-65	200	21.1	MS17987C306 / NAS1333C6C06D	5315-00-051-1410	4213.A06
3/16	0.1870	0.1885	**0.7**	0.220	0.260	0.310	0.53	1.06	1.45	0.73	0.08	5,150	-65	200	21.4	MS17987C307 / NAS1333C6C07D	–	4213.A07
3/16	0.1870	0.1885	**0.8**	0.220	0.260	0.310	0.53	1.06	1.45	0.73	0.08	5,150	-65	200	24.0	MS17987C308 / NAS1333C6C08D	5315-01-586-0899	4213.A08
3/16	0.1870	0.1885	**0.9**	0.220	0.260	0.310	0.53	1.06	1.45	0.73	0.08	5,150	-65	200	24.0	MS17987C309 / NAS1333C6C09D	–	4213.A09
3/16	0.1870	0.1885	**1.0**	0.220	0.260	0.310	0.53	1.06	1.45	0.73	0.08	5,150	-65	200	22.0	MS17987C310 / NAS1333C6C10D	5315-01-558-8879	4213.A10
3/16	0.1870	0.1885	**1.1**	0.220	0.260	0.310	0.53	1.06	1.45	0.73	0.08	5,150	-65	200	25.0	MS17987C311 / NAS1333C6C11D	5315-00-498-0643	4213.A11
3/16	0.1870	0.1885	**1.2**	0.220	0.260	0.310	0.53	1.06	1.45	0.73	0.08	5,150	-65	200	23.0	MS17987C312 / NAS1333C6C12D	5315-01-057-0987	4213.A12
3/16	0.1870	0.1885	**1.3**	0.220	0.260	0.310	0.53	1.06	1.45	0.73	0.08	5,150	-65	200	23.0	MS17987C313 / NAS1333C6C13D	5315-00-461-5554	4213.A13
3/16	0.1870	0.1885	**1.4**	0.220	0.260	0.310	0.53	1.06	1.45	0.73	0.08	5,150	-65	200	24.0	MS17987C314 / NAS1333C6C14D	5315-00-596-7535	4213.A14
3/16	0.1870	0.1885	**1.5**	0.220	0.260	0.310	0.53	1.06	1.45	0.73	0.08	5,150	-65	200	24.0	MS17987C315 / NAS1333C6C15D	–	4213.A15
3/16	0.1870	0.1885	**1.6**	0.220	0.260	0.310	0.53	1.06	1.45	0.73	0.08	5,150	-65	200	26.0	MS17987C316 / NAS1333C6C16D	–	4213.A16
3/16	0.1870	0.1885	**1.7**	0.220	0.260	0.310	0.53	1.06	1.45	0.73	0.08	5,150	-65	200	27.0	MS17987C317 / NAS1333C6C17D	–	4213.A17
3/16	0.1870	0.1885	**1.8**	0.220	0.260	0.310	0.53	1.06	1.45	0.73	0.08	5,150	-65	200	25.2	MS17987C318 / NAS1333C6C18D	5340-99-199-2734 / 5315-00-915-2362	4213.A18
3/16	0.1870	0.1885	**2.0**	0.220	0.260	0.310	0.53	1.06	1.45	0.73	0.08	5,150	-65	200	26.0	MS17987C320 / NAS1333C6C20D	5315-01-291-0432	4213.A20
3/16	0.1870	0.1885	**2.2**	0.220	0.260	0.310	0.53	1.06	1.45	0.73	0.08	5,150	-65	200	26.5	MS17987C322 / NAS1333C6C22D	–	4213.A22
3/16	0.1870	0.1885	**2.3**	0.220	0.260	0.310	0.53	1.06	1.45	0.73	0.08	5,150	-65	200	26.9	MS17987C323 / NAS1333C6C23D	–	4213.A23
3/16	0.1870	0.1885	**2.5**	0.220	0.260	0.310	0.53	1.06	1.45	0.73	0.08	5,150	-65	200	27.0	MS17987C325 / NAS1333C6C25D	–	4213.A25
3/16	0.1870	0.1885	**2.6**	0.220	0.260	0.310	0.53	1.06	1.45	0.73	0.08	5,150	-65	200	27.9	MS17987C326 / NAS1333C6C26D	–	4213.A26
3/16	0.1870	0.1885	**3.0**	0.220	0.260	0.310	0.53	1.06	1.45	0.73	0.08	5,150	-65	200	29.0	MS17987C330 / NAS1333C6C30D	5315-01-367-4913	4213.A30
3/16	0.1870	0.1885	**3.1**	0.220	0.260	0.310	0.53	1.06	1.45	0.73	0.08	5,150	-65	200	33.0	MS17987C331 / NAS1333C6C31D	–	4213.A31
3/16	0.1870	0.1885	**3.4**	0.220	0.260	0.310	0.53	1.06	1.45	0.73	0.08	5,150	-65	200	30.0	MS17987C334 / NAS1333C6C34D	–	4213.A34
3/16	0.1870	0.1885	**4.0**	0.220	0.260	0.310	0.53	1.06	1.45	0.73	0.08	5,150	-65	200	33.0	MS17987C340 / NAS1333C6C40D	–	4213.A40
3/16	0.1870	0.1885	**4.3**	0.220	0.260	0.310	0.53	1.06	1.45	0.73	0.08	5,150	-65	200	36.0	MS17987C343 / NAS1333C6C43D	–	4213.A43
3/16	0.1870	0.1885	**4.5**	0.220	0.260	0.310	0.53	1.06	1.45	0.73	0.08	5,150	-65	200	34.4	MS17987C345 / NAS1333C6C45D	–	4213.A45
3/16	0.1870	0.1885	**4.6**	0.220	0.260	0.310	0.53	1.06	1.45	0.73	0.08	5,150	-65	200	34.7	MS17987C346 / NAS1333C6C46D	–	4213.A46
3/16	0.1870	0.1885	**5.0**	0.220	0.260	0.310	0.53	1.06	1.45	0.73	0.08	5,150	-65	200	35.6	MS17987C350 / NAS1333C6C50D	–	4213.A50

Dimensions												Shearing resistance, two-shear min.				Standard	NSN (National Stock Number)	Art. No.
Nominal diameter A	A min.	A max.	Clamping length L +0.020	B ±0.005	C 0 -0.04	D max.	E max.	F min.	G max.	H min.	J min.		min.	max.				
[in]												[lbf]	[°F]		[g]			
1/4	0.2470	0.2485	**0.3**	0.289	0.290	0.310	0.53	1.06	1.50	0.78	0.08	9,200	-65	200	22.0	MS17987C403 / NAS1334C6C03D	–	4213.B03
1/4	0.2470	0.2485	**0.4**	0.289	0.290	0.310	0.53	1.06	1.50	0.78	0.08	9,200	-65	200	24.0	MS17987C404 / NAS1334C6C04D	5315-00-917-4576 / 5315-00-051-1416	4213.B04
1/4	0.2470	0.2485	**0.5**	0.289	0.290	0.310	0.53	1.06	1.50	0.78	0.08	9,200	-65	200	25.0	MS17987C405 / NAS1334C6C05D	5315-00-934-0212	4213.B05
1/4	0.2470	0.2485	**0.6**	0.289	0.290	0.310	0.53	1.06	1.50	0.78	0.08	9,200	-65	200	25.0	MS17987C406 / NAS1334C6C06D	5315-01-017-8693 / 5315-00-179-9288	4213.B06
1/4	0.2470	0.2485	**0.7**	0.289	0.290	0.310	0.53	1.06	1.50	0.78	0.08	9,200	-65	200	26.0	MS17987C407 / NAS1334C6C07D	5315-00-051-2358	4213.B07
1/4	0.2470	0.2485	**0.8**	0.289	0.290	0.310	0.53	1.06	1.50	0.78	0.08	9,200	-65	200	25.0	MS17987C408 / NAS1334C6C08D	–	4213.B08
1/4	0.2470	0.2485	**0.9**	0.289	0.290	0.310	0.53	1.06	1.50	0.78	0.08	9,200	-65	200	25.0	MS17987C409 / NAS1334C6C09D	–	4213.B09
1/4	0.2470	0.2485	**1.0**	0.289	0.290	0.310	0.53	1.06	1.50	0.78	0.08	9,200	-65	200	26.0	MS17987C410 / NAS1334C6C10D	5315-01-210-0923 / 5315-01-659-5282	4213.B10
1/4	0.2470	0.2485	**1.1**	0.289	0.290	0.310	0.53	1.06	1.50	0.78	0.08	9,200	-65	200	27.0	MS17987C411 / NAS1334C6C11D	5315-00-004-7107	4213.B11
1/4	0.2470	0.2485	**1.2**	0.289	0.290	0.310	0.53	1.06	1.50	0.78	0.08	9,200	-65	200	27.0	MS17987C412 / NAS1334C6C12D	5315-00-051-1420	4213.B12
1/4	0.2470	0.2485	**1.3**	0.289	0.290	0.310	0.53	1.06	1.50	0.78	0.08	9,200	-65	200	30.0	MS17987C413 / NAS1334C6C13D	–	4213.B13
1/4	0.2470	0.2485	**1.4**	0.289	0.290	0.310	0.53	1.06	1.50	0.78	0.08	9,200	-65	200	30.0	MS17987C414 / NAS1334C6C14D	5315-00-886-6164	4213.B14
1/4	0.2470	0.2485	**1.5**	0.289	0.290	0.310	0.53	1.06	1.50	0.78	0.08	9,200	-65	200	29.0	MS17987C415 / NAS1334C6C15D	–	4213.B15
1/4	0.2470	0.2485	**1.6**	0.289	0.290	0.310	0.53	1.06	1.50	0.78	0.08	9,200	-65	200	31.0	MS17987C416 / NAS1334C6C16D	5315-00-413-2678	4213.B16
1/4	0.2470	0.2485	**1.7**	0.289	0.290	0.310	0.53	1.06	1.50	0.78	0.08	9,200	-65	200	30.0	MS17987C417 / NAS1334C6C17D	5315-00-969-4332	4213.B17
1/4	0.2470	0.2485	**1.8**	0.289	0.290	0.310	0.53	1.06	1.50	0.78	0.08	9,200	-65	200	32.0	MS17987C418 / NAS1334C6C18D	5315-99-406-2324 / 5315-00-915-4847	4213.B18
1/4	0.2470	0.2485	**1.9**	0.289	0.290	0.310	0.53	1.06	1.50	0.78	0.08	9,200	-65	200	31.0	MS17987C419 / NAS1334C6C19D	–	4213.B19
1/4	0.2470	0.2485	**2.0**	0.289	0.290	0.310	0.53	1.06	1.50	0.78	0.08	9,200	-65	200	32.0	MS17987C420 / NAS1334C6C20D	5315-00-068-2033 / 5315-00-952-0438	4213.B20
1/4	0.2470	0.2485	**2.1**	0.289	0.290	0.310	0.53	1.06	1.50	0.78	0.08	9,200	-65	200	32.0	MS17987C421 / NAS1334C6C21D	–	4213.B21
1/4	0.2470	0.2485	**2.2**	0.289	0.290	0.310	0.53	1.06	1.50	0.78	0.08	9,200	-65	200	35.0	MS17987C422 / NAS1334C6C22D	–	4213.B22
1/4	0.2470	0.2485	**2.3**	0.289	0.290	0.310	0.53	1.06	1.50	0.78	0.08	9,200	-65	200	34.1	MS17987C423 / NAS1334C6C23D	–	4213.B23
1/4	0.2470	0.2485	**2.4**	0.289	0.290	0.310	0.53	1.06	1.50	0.78	0.08	9,200	-65	200	36.0	MS17987C424 / NAS1334C6C24D	5315-00-519-7406	4213.B24
1/4	0.2470	0.2485	**2.5**	0.289	0.290	0.310	0.53	1.06	1.50	0.78	0.08	9,200	-65	200	35.0	MS17987C425 / NAS1334C6C25D	5315-00-757-3471	4213.B25
1/4	0.2470	0.2485	**2.6**	0.289	0.290	0.310	0.53	1.06	1.50	0.78	0.08	9,200	-65	200	35.0	MS17987C426 / NAS1334C6C26D	5315-99-406-2760	4213.B26
1/4	0.2470	0.2485	**2.7**	0.289	0.290	0.310	0.53	1.06	1.50	0.78	0.08	9,200	-65	200	36.0	MS17987C427 / NAS1334C6C27D	–	4213.B27
1/4	0.2470	0.2485	**2.8**	0.289	0.290	0.310	0.53	1.06	1.50	0.78	0.08	9,200	-65	200	37.2	MS17987C428 / NAS1334C6C28D	–	4213.B28
1/4	0.2470	0.2485	**2.9**	0.289	0.290	0.310	0.53	1.06	1.50	0.78	0.08	9,200	-65	200	40.0	MS17987C429 / NAS1334C6C29D	5315-00-804-2878	4213.B29
1/4	0.2470	0.2485	**3.0**	0.289	0.290	0.310	0.53	1.06	1.50	0.78	0.08	9,200	-65	200	39.0	MS17987C430 / NAS1334C6C30D	5315-00-454-0387	4213.B30
1/4	0.2470	0.2485	**3.1**	0.289	0.290	0.310	0.53	1.06	1.50	0.78	0.08	9,200	-65	200	38.6	MS17987C431 / NAS1334C6C31D	5315-00-728-8284	4213.B31
1/4	0.2470	0.2485	**3.2**	0.289	0.290	0.310	0.53	1.06	1.50	0.78	0.08	9,200	-65	200	39.0	MS17987C432 / NAS1334C6C32D	–	4213.B32

chanhvinh.com

Dimensions												Shearing resistance, two-shear				Standard	NSN (National Stock Number)	Art. No.
Nominal diameter A	A min.	A max.	Clamping length L +0.020	B ±0.005	C 0 -0.04	D max.	E max.	F min.	G max.	H min.	J min.	min.	min.	max.				
[in]												[lbf]	[°F]		[g]			
1/4	0.2470	0.2485	**3.3**	0.289	0.290	0.310	0.53	1.06	1.50	0.78	0.08	9,200	-65	200	40.0	MS17987C433 / NAS1334C6C33D	–	4213.B33
1/4	0.2470	0.2485	**3.5**	0.289	0.290	0.310	0.53	1.06	1.50	0.78	0.08	9,200	-65	200	39.0	MS17987C435 / NAS1334C6C35D	5315-00-187-5597	4213.B35
1/4	0.2470	0.2485	**3.6**	0.289	0.290	0.310	0.53	1.06	1.50	0.78	0.08	9,200	-65	200	39.0	MS17987C436 / NAS1334C6C36D	–	4213.B36
1/4	0.2470	0.2485	**4.0**	0.289	0.290	0.310	0.53	1.06	1.50	0.78	0.08	9,200	-65	200	46.0	MS17987C440 / NAS1334C6C40D	5315-00-053-8545	4213.B40
1/4	0.2470	0.2485	**4.2**	0.289	0.290	0.310	0.53	1.06	1.50	0.78	0.08	9,200	-65	200	45.8	MS17987C442 / NAS1334C6C42D	–	4213.B42
1/4	0.2470	0.2485	**4.3**	0.289	0.290	0.310	0.53	1.06	1.50	0.78	0.08	9,200	-65	200	46.4	MS17987C443 / NAS1334C6C43D	–	4213.B43
1/4	0.2470	0.2485	**4.5**	0.289	0.290	0.310	0.53	1.06	1.50	0.78	0.08	9,200	-65	200	47.0	MS17987C445 / NAS1334C6C45D	–	4213.B45
1/4	0.2470	0.2485	**4.7**	0.289	0.290	0.310	0.53	1.06	1.50	0.78	0.08	9,200	-65	200	50.0	MS17987C447 / NAS1334C6C47D	–	4213.B47
1/4	0.2470	0.2485	**5.4**	0.289	0.290	0.310	0.53	1.06	1.50	0.78	0.08	9,200	-65	200	52.0	MS17987C454 / NAS1334C6C54D	–	4213.B54
5/16	0.3095	0.3110	**0.5**	0.375	0.330	0.310	0.59	1.06	1.65	0.83	0.08	14,400	-65	200	30.0	MS17987C505 / NAS1335C6C05D	–	4213.C05
5/16	0.3095	0.3110	**0.6**	0.375	0.330	0.310	0.59	1.06	1.65	0.83	0.08	14,400	-65	200	30.0	MS17987C506 / NAS1335C6C06D	5315-00-150-3021	4213.C06
5/16	0.3095	0.3110	**0.7**	0.375	0.330	0.310	0.59	1.06	1.65	0.83	0.08	14,400	-65	200	31.0	MS17987C507 / NAS1335C6C07D	–	4213.C07
5/16	0.3095	0.3110	**0.8**	0.375	0.330	0.310	0.59	1.06	1.65	0.83	0.08	14,400	-65	200	33.0	MS17987C508 / NAS1335C6C08D	5315-01-232-5136	4213.C08
5/16	0.3095	0.3110	**0.9**	0.375	0.330	0.310	0.59	1.06	1.65	0.83	0.08	14,400	-65	200	31.0	MS17987C509 / NAS1335C6C09D	–	4213.C09
5/16	0.3095	0.3110	**1.0**	0.375	0.330	0.310	0.59	1.06	1.65	0.83	0.08	14,400	-65	200	32.0	MS17987C510 / NAS1335C6C10D	5315-21-814-9747	4213.C10
5/16	0.3095	0.3110	**1.1**	0.375	0.330	0.310	0.59	1.06	1.65	0.83	0.08	14,400	-65	200	33.0	MS17987C511 / NAS1335C6C11D	–	4213.C11
5/16	0.3095	0.3110	**1.2**	0.375	0.330	0.310	0.59	1.06	1.65	0.83	0.08	14,400	-65	200	33.0	MS17987C512 / NAS1335C6C12D	–	4213.C12
5/16	0.3095	0.3110	**1.3**	0.375	0.330	0.310	0.59	1.06	1.65	0.83	0.08	14,400	-65	200	35.0	MS17987C513 / NAS1335C6C13D	5315-01-110-1201	4213.C13
5/16	0.3095	0.3110	**1.4**	0.375	0.330	0.310	0.59	1.06	1.65	0.83	0.08	14,400	-65	200	36.0	MS17987C514 / NAS1335C6C14D	–	4213.C14
5/16	0.3095	0.3110	**1.5**	0.375	0.330	0.310	0.59	1.06	1.65	0.83	0.08	14,400	-65	200	39.0	MS17987C515 / NAS1335C6C15D	–	4213.C15
5/16	0.3095	0.3110	**1.6**	0.375	0.330	0.310	0.59	1.06	1.65	0.83	0.08	14,400	-65	200	40.0	MS17987C516 / NAS1335C6C16D	5315-01-474-0251 / 5315-00-177-4081	4213.C16
5/16	0.3095	0.3110	**1.7**	0.375	0.330	0.310	0.59	1.06	1.65	0.83	0.08	14,400	-65	200	38.0	MS17987C517 / NAS1335C6C17D	5315-00-051-2386	4213.C17
5/16	0.3095	0.3110	**1.8**	0.375	0.330	0.310	0.59	1.06	1.65	0.83	0.08	14,400	-65	200	39.0	MS17987C518 / NAS1335C6C18D	–	4213.C18
5/16	0.3095	0.3110	**1.9**	0.375	0.330	0.310	0.59	1.06	1.65	0.83	0.08	14,400	-65	200	43.0	MS17987C519 / NAS1335C6C19D	–	4213.C19
5/16	0.3095	0.3110	**2.0**	0.375	0.330	0.310	0.59	1.06	1.65	0.83	0.08	14,400	-65	200	41.0	MS17987C520 / NAS1335C6C20D	–	4213.C20
5/16	0.3095	0.3110	**2.1**	0.375	0.330	0.310	0.59	1.06	1.65	0.83	0.08	14,400	-65	200	42.2	MS17987C521 / NAS1335C6C21D	5315-99-407-0050	4213.C21
5/16	0.3095	0.3110	**2.2**	0.375	0.330	0.310	0.59	1.06	1.65	0.83	0.08	14,400	-65	200	43.1	MS17987C522 / NAS1335C6C22D	5315-00-051-2387	4213.C22
5/16	0.3095	0.3110	**2.3**	0.375	0.330	0.310	0.59	1.06	1.65	0.83	0.08	14,400	-65	200	46.0	MS17987C523 / NAS1335C6C23D	–	4213.C23
5/16	0.3095	0.3110	**2.4**	0.375	0.330	0.310	0.59	1.06	1.65	0.83	0.08	14,400	-65	200	45.0	MS17987C524 / NAS1335C6C24D	5315-01-046-0845 / 5315-00-899-4331	4213.C24
5/16	0.3095	0.3110	**2.5**	0.375	0.330	0.310	0.59	1.06	1.65	0.83	0.08	14,400	-65	200	46.0	MS17987C525 / NAS1335C6C25D	–	4213.C25

chanhvinh.com

Dimensions												Shearing resistance, two-shear				Standard	NSN (National Stock Number)	Art. No.
Nominal diameter A	A min.	A max.	Clamping length L +0.020	B ±0.005	C 0 -0.04	D max.	E max.	F min.	G max.	H min.	J min.	min.	min.	max.				
[in]												[lbf]	[°F]		[g]			
5/16	0.3095	0.3110	**2.6**	0.375	0.330	0.310	0.59	1.06	1.65	0.83	0.08	14,400	-65	200	48.0	MS17987C526 / NAS1335C6C26D	–	4213.C26
5/16	0.3095	0.3110	**2.8**	0.375	0.330	0.310	0.59	1.06	1.65	0.83	0.08	14,400	-65	200	49.0	MS17987C528 / NAS1335C6C28D	–	4213.C28
5/16	0.3095	0.3110	**2.9**	0.375	0.330	0.310	0.59	1.06	1.65	0.83	0.08	14,400	-65	200	49.0	MS17987C529 / NAS1335C6C29D	–	4213.C29
5/16	0.3095	0.3110	**3.0**	0.375	0.330	0.310	0.59	1.06	1.65	0.83	0.08	14,400	-65	200	51.0	MS17987C530 / NAS1335C6C30D	–	4213.C30
5/16	0.3095	0.3110	**3.2**	0.375	0.330	0.310	0.59	1.06	1.65	0.83	0.08	14,400	-65	200	52.6	MS17987C532 / NAS1335C6C32D	–	4213.C32
5/16	0.3095	0.3110	**3.3**	0.375	0.330	0.310	0.59	1.06	1.65	0.83	0.08	14,400	-65	200	57.0	MS17987C533 / NAS1335C6C33D	–	4213.C33
5/16	0.3095	0.3110	**3.4**	0.375	0.330	0.310	0.59	1.06	1.65	0.83	0.08	14,400	-65	200	56.0	MS17987C534 / NAS1335C6C34D	–	4213.C34
5/16	0.3095	0.3110	**3.5**	0.375	0.330	0.310	0.59	1.06	1.65	0.83	0.08	14,400	-65	200	58.0	MS17987C535 / NAS1335C6C35D	–	4213.C35
5/16	0.3095	0.3110	**3.6**	0.375	0.330	0.310	0.59	1.06	1.65	0.83	0.08	14,400	-65	200	56.3	MS17987C536 / NAS1335C6C36D	–	4213.C36
5/16	0.3095	0.3110	**3.8**	0.375	0.330	0.310	0.59	1.06	1.65	0.83	0.08	14,400	-65	200	58.2	MS17987C538 / NAS1335C6C38D	–	4213.C38
5/16	0.3095	0.3110	**3.9**	0.375	0.330	0.310	0.59	1.06	1.65	0.83	0.08	14,400	-65	200	59.2	MS17987C539 / NAS1335C6C39D	–	4213.C39
5/16	0.3095	0.3110	**4.0**	0.375	0.330	0.310	0.59	1.06	1.65	0.83	0.08	14,400	-65	200	60.1	MS17987C540 / NAS1335C6C40D	5315-01-160-7675	4213.C40
5/16	0.3095	0.3110	**4.9**	0.375	0.330	0.310	0.59	1.06	1.65	0.83	0.08	14,400	-65	200	68.0	MS17987C549 / NAS1335C6C49D	–	4213.C49
5/16	0.3095	0.3110	**6.0**	0.375	0.330	0.310	0.59	1.06	1.65	0.83	0.08	14,400	-65	200	78.0	MS17987C560 / NAS1335C6C60D	5315-01-563-5650	4213.C60
3/8	0.3720	0.3735	**0.5**	0.440	0.365	0.390	0.65	1.06	1.65	0.94	0.08	20,700	-65	200	41.0	MS17987C605 / NAS1336C6C05D	5315-00-628-3806	4213.D05
3/8	0.3720	0.3735	**0.6**	0.440	0.365	0.390	0.65	1.06	1.65	0.94	0.08	20,700	-65	200	42.0	MS17987C606 / NAS1336C6C06D	–	4213.D06
3/8	0.3720	0.3735	**0.7**	0.440	0.365	0.390	0.65	1.06	1.65	0.94	0.08	20,700	-65	200	44.0	MS17987C607 / NAS1336C6C07D	5315-01-247-5482	4213.D07
3/8	0.3720	0.3735	**0.8**	0.440	0.365	0.390	0.65	1.06	1.65	0.94	0.08	20,700	-65	200	49.0	MS17987C608 / NAS1336C6C08D	–	4213.D08
3/8	0.3720	0.3735	**0.9**	0.440	0.365	0.390	0.65	1.06	1.65	0.94	0.08	20,700	-65	200	46.0	MS17987C609 / NAS1336C6C09D	5315-01-076-6512	4213.D09
3/8	0.3720	0.3735	**1.0**	0.440	0.365	0.390	0.65	1.06	1.65	0.94	0.08	20,700	-65	200	48.0	MS17987C610 / NAS1336C6C10D	5315-00-891-8895	4213.D10
3/8	0.3720	0.3735	**1.1**	0.440	0.365	0.390	0.65	1.06	1.65	0.94	0.08	20,700	-65	200	49.0	MS17987C611 / NAS1336C6C11D	–	4213.D11
3/8	0.3720	0.3735	**1.2**	0.440	0.365	0.390	0.65	1.06	1.65	0.94	0.08	20,700	-65	200	50.0	MS17987C612 / NAS1336C6C12D	–	4213.D12
3/8	0.3720	0.3735	**1.3**	0.440	0.365	0.390	0.65	1.06	1.65	0.94	0.08	20,700	-65	200	52.0	MS17987C613 / NAS1336C6C13D	5315-00-936-2136	4213.D13
3/8	0.3720	0.3735	**1.4**	0.440	0.365	0.390	0.65	1.06	1.65	0.94	0.08	20,700	-65	200	49.0	MS17987C614 / NAS1336C6C14D	–	4213.D14
3/8	0.3720	0.3735	**1.5**	0.440	0.365	0.390	0.65	1.06	1.65	0.94	0.08	20,700	-65	200	58.0	MS17987C615 / NAS1336C6C15D	5315-00-571-9519	4213.D15
3/8	0.3720	0.3735	**1.6**	0.440	0.365	0.390	0.65	1.06	1.65	0.94	0.08	20,700	-65	200	56.0	MS17987C616 / NAS1336C6C16D	5315-00-182-9728	4213.D16
3/8	0.3720	0.3735	**1.7**	0.440	0.365	0.390	0.65	1.06	1.65	0.94	0.08	20,700	-65	200	57.5	MS17987C617 / NAS1336C6C17D	5315-01-576-4076	4213.D17
3/8	0.3720	0.3735	**1.8**	0.440	0.365	0.390	0.65	1.06	1.65	0.94	0.08	20,700	-65	200	62.0	MS17987C618 / NAS1336C6C18D	5315-00-051-2401 / 5315-00-150-2947	4213.D18
3/8	0.3720	0.3735	**1.9**	0.440	0.365	0.390	0.65	1.06	1.65	0.94	0.08	20,700	-65	200	60.2	MS17987C619 / NAS1336C6C19D	5315-01-050-8247	4213.D19
3/8	0.3720	0.3735	**2.0**	0.440	0.365	0.390	0.65	1.06	1.65	0.94	0.08	20,700	-65	200	63.0	MS17987C620 / NAS1336C6C20D	–	4213.D20

Dimensions												Shearing resistance, two-shear min.				Standard	NSN (National Stock Number)	Art. No.
Nominal diameter A	A min.	A max.	Clamping length L +0.020	B ±0.005	C 0 -0.04	D max.	E max.	F min.	G max.	H min.	J min.		min.	max.				
[in]												[lbf]	[°F]		[g]			
3/8	0.3720	0.3735	**2.2**	0.440	0.365	0.390	0.65	1.06	1.65	0.94	0.08	20,700	-65	200	64.4	MS17987C622 / NAS1336C6C22D	5315-00-157-5650	4213.D22
3/8	0.3720	0.3735	**2.3**	0.440	0.365	0.390	0.65	1.06	1.65	0.94	0.08	20,700	-65	200	65.0	MS17987C623 / NAS1336C6C23D	–	4213.D23
3/8	0.3720	0.3735	**2.4**	0.440	0.365	0.390	0.65	1.06	1.65	0.94	0.08	20,700	-65	200	66.0	MS17987C624 / NAS1336C6C24D	–	4213.D24
3/8	0.3720	0.3735	**2.5**	0.440	0.365	0.390	0.65	1.06	1.65	0.94	0.08	20,700	-65	200	68.4	MS17987C625 / NAS1336C6C25D	5315-20-002-8274 / 5315-00-182-9722	4213.D25
3/8	0.3720	0.3735	**2.6**	0.440	0.365	0.390	0.65	1.06	1.65	0.94	0.08	20,700	-65	200	71.0	MS17987C626 / NAS1336C6C26D	–	4213.D26
3/8	0.3720	0.3735	**2.8**	0.440	0.365	0.390	0.65	1.06	1.65	0.94	0.08	20,700	-65	200	72.0	MS17987C628 / NAS1336C6C28D	5315-00-949-3766	4213.D28
3/8	0.3720	0.3735	**2.9**	0.440	0.365	0.390	0.65	1.06	1.65	0.94	0.08	20,700	-65	200	73.9	MS17987C629 / NAS1336C6C29D	–	4213.D29
3/8	0.3720	0.3735	**3.0**	0.440	0.365	0.390	0.65	1.06	1.65	0.94	0.08	20,700	-65	200	80.0	MS17987C630 / NAS1336C6C30D	–	4213.D30
3/8	0.3720	0.3735	**3.1**	0.440	0.365	0.390	0.65	1.06	1.65	0.94	0.08	20,700	-65	200	82.0	MS17987C631 / NAS1336C6C31D	5315-01-021-9317	4213.D31
3/8	0.3720	0.3735	**3.3**	0.440	0.365	0.390	0.65	1.06	1.65	0.94	0.08	20,700	-65	200	79.0	MS17987C633 / NAS1336C6C33D	5315-00-985-3637	4213.D33
3/8	0.3720	0.3735	**3.4**	0.440	0.365	0.390	0.65	1.06	1.65	0.94	0.08	20,700	-65	200	80.7	MS17987C634 / NAS1336C6C34D	–	4213.D34
3/8	0.3720	0.3735	**3.5**	0.440	0.365	0.390	0.65	1.06	1.65	0.94	0.08	20,700	-65	200	81.0	MS17987C635 / NAS1336C6C35D	–	4213.D35
3/8	0.3720	0.3735	**3.6**	0.440	0.365	0.390	0.65	1.06	1.65	0.94	0.08	20,700	-65	200	83.4	MS17987C636 / NAS1336C6C36D	–	4213.D36
3/8	0.3720	0.3735	**3.9**	0.440	0.365	0.390	0.65	1.06	1.65	0.94	0.08	20,700	-65	200	87.4	MS17987C639 / NAS1336C6C39D	5315-00-182-9679	4213.D39
3/8	0.3720	0.3735	**4.0**	0.440	0.365	0.390	0.65	1.06	1.65	0.94	0.08	20,700	-65	200	91.0	MS17987C640 / NAS1336C6C40D	5315-00-008-7847	4213.D40
3/8	0.3720	0.3735	**4.1**	0.440	0.365	0.390	0.65	1.06	1.65	0.94	0.08	20,700	-65	200	89.0	MS17987C641 / NAS1336C6C41D	–	4213.D41
3/8	0.3720	0.3735	**4.3**	0.440	0.365	0.390	0.65	1.06	1.65	0.94	0.08	20,700	-65	200	97.0	MS17987C643 / NAS1336C6C43D	–	4213.D43
3/8	0.3720	0.3735	**4.4**	0.440	0.365	0.390	0.65	1.06	1.65	0.94	0.08	20,700	-65	200	94.6	MS17987C644 / NAS1336C6C44D	5315-00-500-0513	4213.D44
3/8	0.3720	0.3735	**5.0**	0.440	0.365	0.390	0.65	1.06	1.65	0.94	0.08	20,700	-65	200	101.0	MS17987C650 / NAS1336C6C50D	–	4213.D50
3/8	0.3720	0.3735	**5.5**	0.440	0.365	0.390	0.65	1.06	1.65	0.94	0.08	20,700	-65	200	102.0	MS17987C655 / NAS1336C6C55D	–	4213.D55
3/8	0.3720	0.3735	**5.7**	0.440	0.365	0.390	0.65	1.06	1.65	0.94	0.08	20,700	-65	200	112.0	MS17987C657 / NAS1336C6C57D	–	4213.D57
7/16	0.4345	0.4360	**0.5**	0.509	0.380	0.390	0.71	1.09	1.85	0.98	0.08	28,500	-65	200	46.4	MS17987C705 / NAS1337C6C05D	–	4213.E05
7/16	0.4345	0.4360	**0.6**	0.509	0.380	0.390	0.71	1.09	1.85	0.98	0.08	28,500	-65	200	48.3	MS17987C706 / NAS1337C6C06D	–	4213.E06
7/16	0.4345	0.4360	**0.8**	0.509	0.380	0.390	0.71	1.09	1.85	0.98	0.08	28,500	-65	200	58.0	MS17987C708 / NAS1337C6C08D	–	4213.E08
7/16	0.4345	0.4360	**1.0**	0.509	0.380	0.390	0.71	1.09	1.85	0.98	0.08	28,500	-65	200	55.7	MS17987C710 / NAS1337C6C10D	–	4213.E10
7/16	0.4345	0.4360	**1.2**	0.509	0.380	0.390	0.71	1.09	1.85	0.98	0.08	28,500	-65	200	65.0	MS17987C712 / NAS1337C6C12D	–	4213.E12
7/16	0.4345	0.4360	**1.3**	0.509	0.380	0.390	0.71	1.09	1.85	0.98	0.08	28,500	-65	200	61.0	MS17987C713 / NAS1337C6C13D	–	4213.E13
7/16	0.4345	0.4360	**1.4**	0.509	0.380	0.390	0.71	1.09	1.85	0.98	0.08	28,500	-65	200	68.0	MS17987C714 / NAS1337C6C14D	–	4213.E14
7/16	0.4345	0.4360	**1.5**	0.509	0.380	0.390	0.71	1.09	1.85	0.98	0.08	28,500	-65	200	70.0	MS17987C715 / NAS1337C6C15D	–	4213.E15
7/16	0.4345	0.4360	**1.6**	0.509	0.380	0.390	0.71	1.09	1.85	0.98	0.08	28,500	-65	200	66.8	MS17987C716 / NAS1337C6C16D	–	4213.E16

Dimensions												Shearing resistance, two-shear min.				Standard	NSN (National Stock Number)	Art. No.
Nominal diameter A	A min.	A max.	Clamping length L +0.020	B ±0.005	C 0 -0.04	D max.	E max.	F min.	G max.	H min.	J min.		min.	max.				
[in]												[lbf]	[°F]		[g]			
7/16	0.4345	0.4360	**1.7**	0.509	0.380	0.390	0.71	1.09	1.85	0.98	0.08	28,500	-65	200	69.0	MS17987C717 / NAS1337C6C17D	–	4213.E17
7/16	0.4345	0.4360	**1.9**	0.509	0.380	0.390	0.71	1.09	1.85	0.98	0.08	28,500	-65	200	78.0	MS17987C719 / NAS1337C6C19D	–	4213.E19
7/16	0.4345	0.4360	**2.0**	0.509	0.380	0.390	0.71	1.09	1.85	0.98	0.08	28,500	-65	200	81.0	MS17987C720 / NAS1337C6C20D	–	4213.E20
7/16	0.4345	0.4360	**2.1**	0.509	0.380	0.390	0.71	1.09	1.85	0.98	0.08	28,500	-65	200	76.1	MS17987C721 / NAS1337C6C21D	–	4213.E21
7/16	0.4345	0.4360	**2.2**	0.509	0.380	0.390	0.71	1.09	1.85	0.98	0.08	28,500	-65	200	77.0	MS17987C722 / NAS1337C6C22D	–	4213.E22
7/16	0.4345	0.4360	**2.4**	0.509	0.380	0.390	0.71	1.09	1.85	0.98	0.08	28,500	-65	200	81.0	MS17987C724 / NAS1337C6C24D	–	4213.E24
7/16	0.4345	0.4360	**2.5**	0.509	0.380	0.390	0.71	1.09	1.85	0.98	0.08	28,500	-65	200	83.6	MS17987C725 / NAS1337C6C25D	–	4213.E25
7/16	0.4345	0.4360	**2.6**	0.509	0.380	0.390	0.71	1.09	1.85	0.98	0.08	28,500	-65	200	84.0	MS17987C726 / NAS1337C6C26D	–	4213.E26
7/16	0.4345	0.4360	**2.8**	0.509	0.380	0.390	0.71	1.09	1.85	0.98	0.08	28,500	-65	200	89.2	MS17987C728 / NAS1337C6C28D	–	4213.E28
7/16	0.4345	0.4360	**3.0**	0.509	0.380	0.390	0.71	1.09	1.85	0.98	0.08	28,500	-65	200	92.8	MS17987C730 / NAS1337C6C30D	–	4213.E30
7/16	0.4345	0.4360	**3.2**	0.509	0.380	0.390	0.71	1.09	1.85	0.98	0.08	28,500	-65	200	96.6	MS17987C732 / NAS1337C6C32D	–	4213.E32
7/16	0.4345	0.4360	**3.8**	0.509	0.380	0.390	0.71	1.09	1.85	0.98	0.08	28,500	-65	200	108.0	MS17987C738 / NAS1337C6C38D	–	4213.E38
7/16	0.4345	0.4360	**4.0**	0.509	0.380	0.390	0.71	1.09	1.85	0.98	0.08	28,500	-65	200	115.0	MS17987C740 / NAS1337C6C40D	–	4213.E40
7/16	0.4345	0.4360	**5.5**	0.509	0.380	0.390	0.71	1.09	1.85	0.98	0.08	28,500	-65	200	139.0	MS17987C755 / NAS1337C6C55D	–	4213.E55
1/2	0.4970	0.4985	**0.8**	0.594	0.460	0.565	0.80	1.16	1.85	1.14	0.08	36,900	-65	200	73.0	MS17987C808 / NAS1338C6C08D	–	4213.F08
1/2	0.4970	0.4985	**0.9**	0.594	0.460	0.565	0.80	1.16	1.85	1.14	0.08	36,900	-65	200	75.8	MS17987C809 / NAS1338C6C09D	–	4213.F09
1/2	0.4970	0.4985	**1.0**	0.594	0.460	0.565	0.80	1.16	1.85	1.14	0.08	36,900	-65	200	78.0	MS17987C810 / NAS1338C6C10D	5315-00-051-1407	4213.F10
1/2	0.4970	0.4985	**1.1**	0.594	0.460	0.565	0.80	1.16	1.85	1.14	0.08	36,900	-65	200	80.0	MS17987C811 / NAS1338C6C11D	–	4213.F11
1/2	0.4970	0.4985	**1.2**	0.594	0.460	0.565	0.80	1.16	1.85	1.14	0.08	36,900	-65	200	89.0	MS17987C812 / NAS1338C6C12D	–	4213.F12
1/2	0.4970	0.4985	**1.3**	0.594	0.460	0.565	0.80	1.16	1.85	1.14	0.08	36,900	-65	200	93.0	MS17987C813 / NAS1338C6C13D	–	4213.F13
1/2	0.4970	0.4985	**1.4**	0.594	0.460	0.565	0.80	1.16	1.85	1.14	0.08	36,900	-65	200	94.0	MS17987C814 / NAS1338C6C14D	5315-00-186-3458	4213.F14
1/2	0.4970	0.4985	**1.5**	0.594	0.460	0.565	0.80	1.16	1.85	1.14	0.08	36,900	-65	200	95.0	MS17987C815 / NAS1338C6C15D	–	4213.F15
1/2	0.4970	0.4985	**1.6**	0.594	0.460	0.565	0.80	1.16	1.85	1.14	0.08	36,900	-65	200	92.0	MS17987C816 / NAS1338C6C16D	–	4213.F16
1/2	0.4970	0.4985	**1.7**	0.594	0.460	0.565	0.80	1.16	1.85	1.14	0.08	36,900	-65	200	95.5	MS17987C817 / NAS1338C6C17D	5315-00-051-1404	4213.F17
1/2	0.4970	0.4985	**1.8**	0.594	0.460	0.565	0.80	1.16	1.85	1.14	0.08	36,900	-65	200	97.0	MS17987C818 / NAS1338C6C18D	–	4213.F18
1/2	0.4970	0.4985	**1.9**	0.594	0.460	0.565	0.80	1.16	1.85	1.14	0.08	36,900	-65	200	100.0	MS17987C819 / NAS1338C6C19D	5315-99-970-3069	4213.F19
1/2	0.4970	0.4985	**2.0**	0.594	0.460	0.565	0.80	1.16	1.85	1.14	0.08	36,900	-65	200	109.0	MS17987C820 / NAS1338C6C20D	–	4213.F20
1/2	0.4970	0.4985	**2.1**	0.594	0.460	0.565	0.80	1.16	1.85	1.14	0.08	36,900	-65	200	105.0	MS17987C821 / NAS1338C6C21D	–	4213.F21
1/2	0.4970	0.4985	**2.2**	0.594	0.460	0.565	0.80	1.16	1.85	1.14	0.08	36,900	-65	200	107.0	MS17987C822 / NAS1338C6C22D	–	4213.F22
1/2	0.4970	0.4985	**2.3**	0.594	0.460	0.565	0.80	1.16	1.85	1.14	0.08	36,900	-65	200	117.0	MS17987C823 / NAS1338C6C23D	–	4213.F23

Dimensions												Shearing resistance, two-shear min.				Standard	NSN (National Stock Number)	Art. No.
Nominal diameter A	A min.	A max.	Clamping length L +0.020 0	B ±0.005	C 0 -0.04	D max.	E max.	F min.	G max.	H min.	J min.		min.	max.				
[in]												[lbf]	[°F]		[g]			
1/2	0.4970	0.4985	**2.5**	0.594	0.460	0.565	0.80	1.16	1.85	1.14	0.08	36,900	-65	200	119.0	MS17987C825 / NAS1338C6C25D	–	4213.F25
1/2	0.4970	0.4985	**2.8**	0.594	0.460	0.565	0.80	1.16	1.85	1.14	0.08	36,900	-65	200	126.0	MS17987C828 / NAS1338C6C28D	–	4213.F28
1/2	0.4970	0.4985	**2.9**	0.594	0.460	0.565	0.80	1.16	1.85	1.14	0.08	36,900	-65	200	123.0	MS17987C829 / NAS1338C6C29D	–	4213.F29
1/2	0.4970	0.4985	**3.0**	0.594	0.460	0.565	0.80	1.16	1.85	1.14	0.08	36,900	-65	200	125.0	MS17987C830 / NAS1338C6C30D	5315-01-510-4806	4213.F30
1/2	0.4970	0.4985	**3.1**	0.594	0.460	0.565	0.80	1.16	1.85	1.14	0.08	36,900	-65	200	129.0	MS17987C831 / NAS1338C6C31D	–	4213.F31
1/2	0.4970	0.4985	**3.2**	0.594	0.460	0.565	0.80	1.16	1.85	1.14	0.08	36,900	-65	200	132.1	MS17987C832 / NAS1338C6C32D	5315-01-304-6934	4213.F32
1/2	0.4970	0.4985	**3.3**	0.594	0.460	0.565	0.80	1.16	1.85	1.14	0.08	36,900	-65	200	141.0	MS17987C833 / NAS1338C6C33D	5315-01-112-0419	4213.F33
1/2	0.4970	0.4985	**3.4**	0.594	0.460	0.565	0.80	1.16	1.85	1.14	0.08	36,900	-65	200	135.0	MS17987C834 / NAS1338C6C34D	–	4213.F34
1/2	0.4970	0.4985	**3.5**	0.594	0.460	0.565	0.80	1.16	1.85	1.14	0.08	36,900	-65	200	146.0	MS17987C835 / NAS1338C6C35D	–	4213.F35
1/2	0.4970	0.4985	**3.6**	0.594	0.460	0.565	0.80	1.16	1.85	1.14	0.08	36,900	-65	200	141.9	MS17987C836 / NAS1338C6C36D	–	4213.F36
1/2	0.4970	0.4985	**3.7**	0.594	0.460	0.565	0.80	1.16	1.85	1.14	0.08	36,900	-65	200	142.0	MS17987C837 / NAS1338C6C37D	–	4213.F37
1/2	0.4970	0.4985	**3.8**	0.594	0.460	0.565	0.80	1.16	1.85	1.14	0.08	36,900	-65	200	146.8	MS17987C838 / NAS1338C6C38D	–	4213.F38
1/2	0.4970	0.4985	**3.9**	0.594	0.460	0.565	0.80	1.16	1.85	1.14	0.08	36,900	-65	200	160.0	MS17987C839 / NAS1338C6C39D	–	4213.F39
1/2	0.4970	0.4985	**4.0**	0.594	0.460	0.565	0.80	1.16	1.85	1.14	0.08	36,900	-65	200	157.0	MS17987C840 / NAS1338C6C40D	–	4213.F40
1/2	0.4970	0.4985	**4.1**	0.594	0.460	0.565	0.80	1.16	1.85	1.14	0.08	36,900	-65	200	154.1	MS17987C841 / NAS1338C6C41D	5315-01-095-8487	4213.F41
1/2	0.4970	0.4985	**4.2**	0.594	0.460	0.565	0.80	1.16	1.85	1.14	0.08	36,900	-65	200	156.0	MS17987C842 / NAS1338C6C42D	5315-01-021-9316	4213.F42
1/2	0.4970	0.4985	**4.4**	0.594	0.460	0.565	0.80	1.16	1.85	1.14	0.08	36,900	-65	200	161.0	MS17987C844 / NAS1338C6C44D	–	4213.F44
1/2	0.4970	0.4985	**4.5**	0.594	0.460	0.565	0.80	1.16	1.85	1.14	0.08	36,900	-65	200	160.0	MS17987C845 / NAS1338C6C45D	–	4213.F45
1/2	0.4970	0.4985	**4.6**	0.594	0.460	0.565	0.80	1.16	1.85	1.14	0.08	36,900	-65	200	166.0	MS17987C846 / NAS1338C6C46D	–	4213.F46
1/2	0.4970	0.4985	**4.8**	0.594	0.460	0.565	0.80	1.16	1.85	1.14	0.08	36,900	-65	200	171.0	MS17987C848 / NAS1338C6C48D	–	4213.F48
1/2	0.4970	0.4985	**5.0**	0.594	0.460	0.565	0.80	1.16	1.85	1.14	0.08	36,900	-65	200	186.0	MS17987C850 / NAS1338C6C50D	–	4213.F50
1/2	0.4970	0.4985	**5.1**	0.594	0.460	0.565	0.80	1.16	1.85	1.14	0.08	36,900	-65	200	176.0	MS17987C851 / NAS1338C6C51D	–	4213.F51
1/2	0.4970	0.4985	**5.3**	0.594	0.460	0.565	0.80	1.16	1.85	1.14	0.08	36,900	-65	200	193.0	MS17987C853 / NAS1338C6C53D	–	4213.F53
1/2	0.4970	0.4985	**5.5**	0.594	0.460	0.565	0.80	1.16	1.85	1.14	0.08	36,900	-65	200	185.0	MS17987C855 / NAS1338C6C55D	–	4213.F55
1/2	0.4970	0.4985	**5.6**	0.594	0.460	0.565	0.80	1.16	1.85	1.14	0.08	36,900	-65	200	190.4	MS17987C856 / NAS1338C6C56D	–	4213.F56
1/2	0.4970	0.4985	**5.7**	0.594	0.460	0.565	0.80	1.16	1.85	1.14	0.08	36,900	-65	200	193.1	MS17987C857 / NAS1338C6C57D	5315-99-466-3978 / 5315-01-367-6450	4213.F57
1/2	0.4970	0.4985	**5.8**	0.594	0.460	0.565	0.80	1.16	1.85	1.14	0.08	36,900	-65	200	193.0	MS17987C858 / NAS1338C6C58D	–	4213.F58
1/2	0.4970	0.4985	**6.0**	0.594	0.460	0.565	0.80	1.16	1.85	1.14	0.08	36,900	-65	200	198.0	MS17987C860 / NAS1338C6C60D	–	4213.F60
9/16	0.5595	0.5610	**1.0**	0.666	0.510	0.565	0.84	1.16	2.03	1.14	0.08	46,700	-65	200	94.2	MS17987C910 / NAS1339C6C10D	–	4213.G10
9/16	0.5595	0.5610	**1.2**	0.666	0.510	0.565	0.84	1.16	2.03	1.14	0.08	46,700	-65	200	110.0	MS17987C912 / NAS1339C6C12D	–	4213.G12

Dimensions												Shearing resistance, two-shear min.				Standard	NSN (National Stock Number)	Art. No.
Nominal diameter A	A min.	A max.	Clamping length L +0.020	B ±0.005	C 0 -0.04	D max.	E max.	F min.	G max.	H min.	J min.		min.	max.				
[in]												[lbf]	[°F]		[g]			
9/16	0.5595	0.5610	1.3	0.666	0.510	0.565	0.84	1.16	2.03	1.14	0.08	46,700	-65	200	103.0	MS17987C913 / NAS1339C6C13D	–	4213.G13
9/16	0.5595	0.5610	1.5	0.666	0.510	0.565	0.84	1.16	2.03	1.14	0.08	46,700	-65	200	110.0	MS17987C915 / NAS1339C6C15D	–	4213.G15
9/16	0.5595	0.5610	2.0	0.666	0.510	0.565	0.84	1.16	2.03	1.14	0.08	46,700	-65	200	125.0	MS17987C920 / NAS1339C6C20D	–	4213.G20
9/16	0.5595	0.5610	2.2	0.666	0.510	0.565	0.84	1.16	2.03	1.14	0.08	46,700	-65	200	132.0	MS17987C922 / NAS1339C6C22D	–	4213.G22
9/16	0.5595	0.5610	2.5	0.666	0.510	0.565	0.84	1.16	2.03	1.14	0.08	46,700	-65	200	150.0	MS17987C925 / NAS1339C6C25D	–	4213.G25
9/16	0.5595	0.5610	2.7	0.666	0.510	0.565	0.84	1.16	2.03	1.14	0.08	46,700	-65	200	147.0	MS17987C927 / NAS1339C6C27D	–	4213.G27
9/16	0.5595	0.5610	2.8	0.666	0.510	0.565	0.84	1.16	2.03	1.14	0.08	46,700	-65	200	149.0	MS17987C928 / NAS1339C6C28D	–	4213.G28
9/16	0.5595	0.5610	3.0	0.666	0.510	0.565	0.84	1.16	2.03	1.14	0.08	46,700	-65	200	166.0	MS17987C930 / NAS1339C6C30D	5315-01-677-9077	4213.G30
9/16	0.5595	0.5610	3.7	0.666	0.510	0.565	0.84	1.16	2.03	1.14	0.08	46,700	-65	200	187.0	MS17987C937 / NAS1339C6C37D	–	4213.G37
9/16	0.5595	0.5610	4.2	0.666	0.510	0.565	0.84	1.16	2.03	1.14	0.08	46,700	-65	200	194.0	MS17987C942 / NAS1339C6C42D	–	4213.G42
9/16	0.5595	0.5610	5.5	0.666	0.510	0.565	0.84	1.16	2.03	1.14	0.08	46,700	-65	200	245.0	MS17987C955 / NAS1339C6C55D	–	4213.G55
5/8	0.6220	0.6235	1.5	0.750	0.580	0.580	0.90	1.24	2.25	1.40	0.12	57,800	-65	200	160.0	MS17987C1015 / NAS1340C6C15D	–	4213.H15
5/8	0.6220	0.6235	1.7	0.750	0.580	0.580	0.90	1.24	2.25	1.40	0.12	57,800	-65	200	166.0	MS17987C1017 / NAS1340C6C17D	–	4213.H17
5/8	0.6220	0.6235	1.8	0.750	0.580	0.580	0.90	1.24	2.25	1.40	0.12	57,800	-65	200	171.0	MS17987C1018 / NAS1340C6C18D	5315-99-406-2351 / 5315-00-913-0607	4213.H18
5/8	0.6220	0.6235	2.0	0.750	0.580	0.580	0.90	1.24	2.25	1.40	0.12	57,800	-65	200	179.0	MS17987C1020 / NAS1340C6C20D	5315-00-338-1656	4213.H20
5/8	0.6220	0.6235	2.5	0.750	0.580	0.580	0.90	1.24	2.25	1.40	0.12	57,800	-65	200	198.0	MS17987C1025 / NAS1340C6C25D	–	4213.H25
5/8	0.6220	0.6235	2.7	0.750	0.580	0.580	0.90	1.24	2.25	1.40	0.12	57,800	-65	200	199.9	MS17987C1027 / NAS1340C6C27D	–	4213.H27
5/8	0.6220	0.6235	3.6	0.750	0.580	0.580	0.90	1.24	2.25	1.40	0.12	57,800	-65	200	240.0	MS17987C1036 / NAS1340C6C36D	–	4213.H36
5/8	0.6220	0.6235	3.9	0.750	0.580	0.580	0.90	1.24	2.25	1.40	0.12	57,800	-65	200	252.0	MS17987C1039 / NAS1340C6C39D	5315-00-008-3658	4213.H39
5/8	0.6220	0.6235	4.0	0.750	0.580	0.580	0.90	1.24	2.25	1.40	0.12	57,800	-65	200	256.0	MS17987C1040 / NAS1340C6C40D	–	4213.H40
5/8	0.6220	0.6235	4.3	0.750	0.580	0.580	0.90	1.24	2.25	1.40	0.12	57,800	-65	200	267.0	MS17987C1043 / NAS1340C6C43D	–	4213.H43
5/8	0.6220	0.6235	4.8	0.750	0.580	0.580	0.90	1.24	2.25	1.40	0.12	57,800	-65	200	286.0	MS17987C1048 / NAS1340C6C48D	–	4213.H48
5/8	0.6220	0.6235	5.0	0.750	0.580	0.580	0.90	1.24	2.25	1.40	0.12	57,800	-65	200	291.0	MS17987C1050 / NAS1340C6C50D	–	4213.H50
5/8	0.6220	0.6235	6.0	0.750	0.580	0.580	0.90	1.24	2.25	1.40	0.12	57,800	-65	200	333.0	MS17987C1060 / NAS1340C6C60D	5315-01-444-7384	4213.H60
3/4	0.7470	0.7485	1.5	0.887	0.670	0.700	1.04	1.64	2.65	1.63	0.12	83,200	-65	200	235.0	MS17987C1215 / NAS1341C6C15D	–	4213.K15
3/4	0.7470	0.7485	1.6	0.887	0.670	0.700	1.04	1.64	2.65	1.63	0.12	83,200	-65	200	240.0	MS17987C1216 / NAS1341C6C16D	–	4213.K16
3/4	0.7470	0.7485	1.7	0.887	0.670	0.700	1.04	1.64	2.65	1.63	0.12	83,200	-65	200	224.0	MS17987C1217 / NAS1341C6C17D	5315-00-969-4444	4213.K17
3/4	0.7470	0.7485	1.9	0.887	0.670	0.700	1.04	1.64	2.65	1.63	0.12	83,200	-65	200	257.0	MS17987C1219 / NAS1341C6C19D	–	4213.K19
3/4	0.7470	0.7485	2.0	0.887	0.670	0.700	1.04	1.64	2.65	1.63	0.12	83,200	-65	200	262.0	MS17987C1220 / NAS1341C6C20D	5340-99-956-4025	4213.K20
3/4	0.7470	0.7485	2.4	0.887	0.670	0.700	1.04	1.64	2.65	1.63	0.12	83,200	-65	200	285.0	MS17987C1224 / NAS1341C6C24D	–	4213.K24

chanhvinh.com

Dimensions												Shearing resistance, two-shear min.	Temperature		Weight	Standard	NSN (National Stock Number)	Art. No.
Nominal diameter A	A min.	A max.	Clamping length L +0.020	B ±0.005	C 0 -0.04	D max.	E max.	F min.	G max.	H min.	J min.		min.	max.				
[in]												[lbf]	[°F]		[g]			
3/4	0.7470	0.7485	2.5	0.887	0.670	0.700	1.04	1.64	2.65	1.63	0.12	83,200	-65	200	292.0	MS17987C1225 / NAS1341C6C25D	–	4213.K25
3/4	0.7470	0.7485	2.7	0.887	0.670	0.700	1.04	1.64	2.65	1.63	0.12	83,200	-65	200	303.0	MS17987C1227 / NAS1341C6C27D	–	4213.K27
3/4	0.7470	0.7485	3.0	0.887	0.670	0.700	1.04	1.64	2.65	1.63	0.12	83,200	-65	200	319.0	MS17987C1230 / NAS1341C6C30D	–	4213.K30
3/4	0.7470	0.7485	3.5	0.887	0.670	0.700	1.04	1.64	2.65	1.63	0.12	83,200	-65	200	346.0	MS17987C1235 / NAS1341C6C35D	–	4213.K35
3/4	0.7470	0.7485	3.6	0.887	0.670	0.700	1.04	1.64	2.65	1.63	0.12	83,200	-65	200	351.0	MS17987C1236 / NAS1341C6C36D	–	4213.K36
3/4	0.7470	0.7485	4.0	0.887	0.670	0.700	1.04	1.64	2.65	1.63	0.12	83,200	-65	200	374.0	MS17987C1240 / NAS1341C6C40D	–	4213.K40
3/4	0.7470	0.7485	4.1	0.887	0.670	0.700	1.04	1.64	2.65	1.63	0.12	83,200	-65	200	380.0	MS17987C1241 / NAS1341C6C41D	5315-01-367-4915	4213.K41
3/4	0.7470	0.7485	4.3	0.887	0.670	0.700	1.04	1.64	2.65	1.63	0.12	83,200	-65	200	390.0	MS17987C1243 / NAS1341C6C43D	–	4213.K43
7/8	0.8720	0.8735	2.3	0.890	0.760	0.840	1.23	1.64	3.00	1.86	0.12	112,500	-65	200	387.0	MS17987C1423 / NAS1342C6C23D	5315-99-406-2686	4213.L23
7/8	0.8720	0.8735	4.0	0.890	0.760	0.840	1.23	1.64	3.00	1.86	0.12	112,500	-65	200	516.0	MS17987C1440 / NAS1342C6C40D	–	4213.L40
1	0.9970	0.9985	2.5	1.219	0.890	0.950	1.33	1.64	3.10	2.00	0.12	147,200	-65	200	518.0	MS17987C1625 / NAS1343C6C25D	–	4213.M25
1	0.9970	0.9985	2.6	1.219	0.890	0.950	1.33	1.64	3.10	2.00	0.12	147,200	-65	200	527.0	MS17987C1626 / NAS1343C6C26D	5315-01-682-6002	4213.M26
1	0.9970	0.9985	4.0	1.219	0.890	0.950	1.33	1.64	3.10	2.00	0.12	147,200	-65	200	665.0	MS17987C1640 / NAS1343C6C40D	–	4213.M40
1	0.9970	0.9985	4.5	1.219	0.890	0.950	1.33	1.64	3.10	2.00	0.12	147,200	-65	200	716.0	MS17987C1645 / NAS1343C6C45D	–	4213.M45

Compliance

For detailed compliance information please select the desired article number.