chanhvinh.com

Ball Lock Pins • single acting - comply with NAS / MS17985

EH 4211.



Product Description

Ball Lock Pins according to MS17985 / NAS1333-1343 are used for quick fastening, locking, adjusting, changing and securing. Quickly and easily unlockable for frequently repeated connections.
Ball Lock Pins (Quick Release Pins) are produced according to Aviation Norm MS / NAS and tested according to NAS 1332.
Surface treatment:
- All stainless steel parts are passivated according AMS2700
- All alluminium parts alloy anodized according MIL-A-8625

Heat treatment:
- Body: Rc. 40 min. (AMS2759, Condition H900)
- Spindle: Rc. 40 min. (AMS2759, Condition H900)
- Ball: Rc. 58-62 min. (AMS2759)

Material

Body
- Stainless steel, precipitation-hardened, passivated - CRES 17-4PH (specification AMS5643)

Spindle
- Stainless steel, precipitation-hardened, passivated - CRES 17-4PH (specification AMS5643)

Spring
- Stainless steel, passivated - CRES 302 (specification ASTM-A-313)

Handle
- Aluminium, black anodised - Alum.Alloy A380 (specification ASTM B85/B85)

Attaching ring
- Stainless steel, passivated - CRES 302 (specification ASTM A-313/A313M)

Press button
- Stainless steel, passivated - CRES 303 (specification ASTM A484/484M)

Ball
- Stainless steel, precipitation-hardened, passivated - CRES 440C (specification AMS5630)

Operation

Ball lock pins single acting are self-locking and require a push of the button to release the balls.

More information

Notes

All further dimensions are available on request.
Other diameter / length combinations not listed which comply with the standard can be produced at short notice on customer request.
Customized design on request.
- This product is manufactured in INCH dimensions.

chanhvinh.com

Drawing

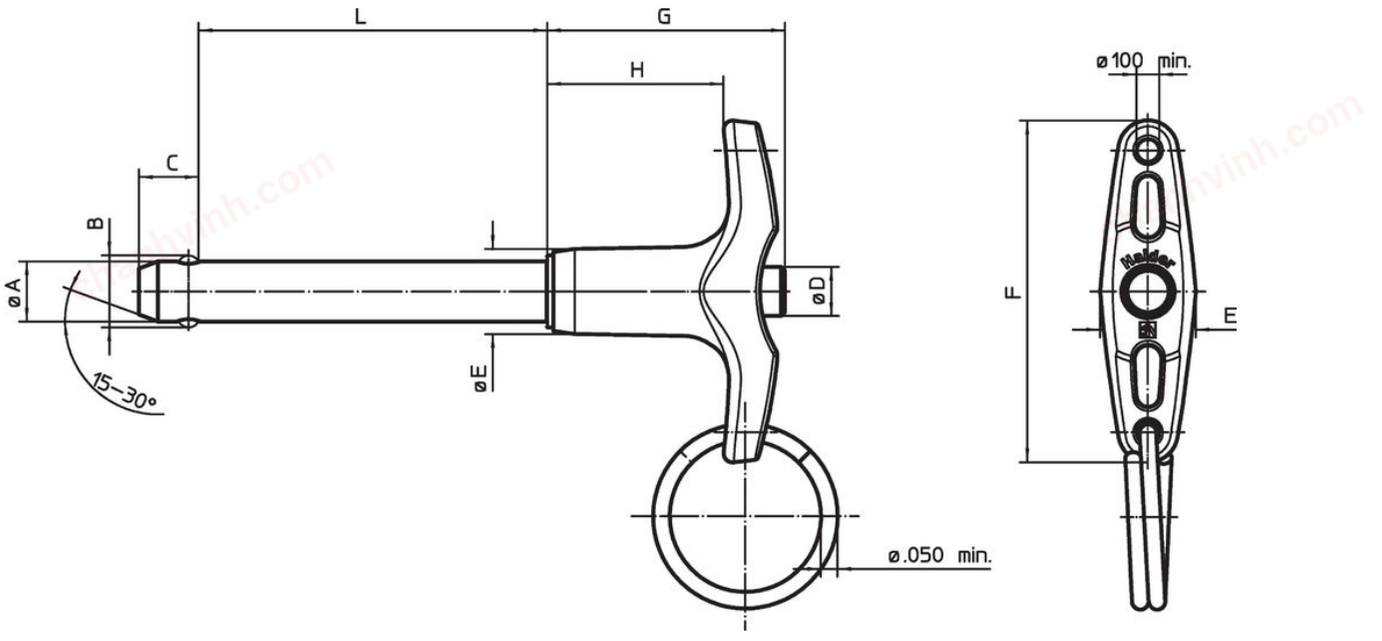

Order information

Nominal diameter A	A min.	A max.	Clamping length L +0.02 0	Dimensions							Shearing resistance, two-shear min.	min.	max.		Standard	NSN (National Stock Number)	Art. No.
				B ±0.005	C 0 -0.04	D max.	E max.	F max.	G max.	H min.							
[in]	[in]	[in]	[in]	[in]							[lbf]	[°F]		[g]			
3/16	0.1870	0.1885	**0.3**	0.220	0.260	0.310	0.500	1.815	1.27	0.800	5,150	-65	200	18.0	MS17985C303 / NAS1333A2C03D	5315-00-177-4041	4211.A03
3/16	0.1870	0.1885	**0.4**	0.220	0.260	0.310	0.500	1.815	1.27	0.800	5,150	-65	200	18.8	MS17985C304 / NAS1333A2C04D	–	4211.A04
3/16	0.1870	0.1885	**0.5**	0.220	0.260	0.310	0.500	1.815	1.27	0.800	5,150	-65	200	24.0	MS17985C305 / NAS1333A2C05D	–	4211.A05
3/16	0.1870	0.1885	**0.6**	0.220	0.260	0.310	0.500	1.815	1.27	0.800	5,150	-65	200	19.5	MS17985C306 / NAS1333A2C06D	–	4211.A06
3/16	0.1870	0.1885	**0.7**	0.220	0.260	0.310	0.500	1.815	1.27	0.800	5,150	-65	200	20.0	MS17985C307 / NAS1333A2C07D	–	4211.A07
3/16	0.1870	0.1885	**0.8**	0.220	0.260	0.310	0.500	1.815	1.27	0.800	5,150	-65	200	20.0	MS17985C308 / NAS1333A2C08D	–	4211.A08
3/16	0.1870	0.1885	**1.0**	0.220	0.260	0.310	0.500	1.815	1.27	0.800	5,150	-65	200	21.0	MS17985C310 / NAS1333A2C10D	–	4211.A10
3/16	0.1870	0.1885	**1.1**	0.220	0.260	0.310	0.500	1.815	1.27	0.800	5,150	-65	200	21.2	MS17985C310 / NAS1333A2C11D	–	4211.A11
3/16	0.1870	0.1885	**1.2**	0.220	0.260	0.310	0.500	1.815	1.27	0.800	5,150	-65	200	21.0	MS17985C312 / NAS1333A2C12D	5315-01-130-3355	4211.A12
3/16	0.1870	0.1885	**1.3**	0.220	0.260	0.310	0.500	1.815	1.27	0.800	5,150	-65	200	27.0	MS17985C313 / NAS1333A2C13D	5315-01-320-7293	4211.A13
3/16	0.1870	0.1885	**1.4**	0.220	0.260	0.310	0.500	1.815	1.27	0.800	5,150	-65	200	25.0	MS17985C314 / NAS1333A2C14D	–	4211.A14
3/16	0.1870	0.1885	**1.5**	0.220	0.260	0.310	0.500	1.815	1.27	0.800	5,150	-65	200	22.5	MS17985C315 / NAS1333A2C15D	–	4211.A15
3/16	0.1870	0.1885	**1.6**	0.220	0.260	0.310	0.500	1.815	1.27	0.800	5,150	-65	200	22.7	MS17985C316 / NAS1333A2C16D	–	4211.A16
3/16	0.1870	0.1885	**2.0**	0.220	0.260	0.310	0.500	1.815	1.27	0.800	5,150	-65	200	24.0	MS17985C320 / NAS1333A2C20D	5315-00-421-4771	4211.A20
3/16	0.1870	0.1885	**2.1**	0.220	0.260	0.310	0.500	1.815	1.27	0.800	5,150	-65	200	28.0	MS17985C321 / NAS1333A2C21D	–	4211.A21
3/16	0.1870	0.1885	**2.2**	0.220	0.260	0.310	0.500	1.815	1.27	0.800	5,150	-65	200	30.0	MS17985C322 / NAS1333A2C22D	–	4211.A22
3/16	0.1870	0.1885	**2.3**	0.220	0.260	0.310	0.500	1.815	1.27	0.800	5,150	-65	200	30.0	MS17985C323 / NAS1333A2C23D	–	4211.A23

chanhvinh.com

Nominal diameter A	A min.	A max.	Clamping length L +0.02 0	Dimensions							Shearing resistance, two-shear min.	min.	max.		Standard	NSN (National Stock Number)	Art. No.
				B ±0.005	C 0 -0.04	D max.	E max.	F max.	G max.	H min.							
[in]	[in]	[in]	[in]	[in]							[lbf]	[°F]		[g]			
3/16	0.1870	0.1885	**2.5**	0.220	0.260	0.310	0.500	1.815	1.27	0.800	5,150	-65	200	26.0	MS17985C325 / NAS1333A2C25D	–	4211.A25
3/16	0.1870	0.1885	**2.6**	0.220	0.260	0.310	0.500	1.815	1.27	0.800	5,150	-65	200	30.0	MS17985C326 / NAS1333A2C26D	–	4211.A26
3/16	0.1870	0.1885	**3.0**	0.220	0.260	0.310	0.500	1.815	1.27	0.800	5,150	-65	200	27.3	MS17985C330 / NAS1333A2C30D	–	4211.A30
3/16	0.1870	0.1885	**4.0**	0.220	0.260	0.310	0.500	1.815	1.27	0.800	5,150	-65	200	31.0	MS17985C340 / NAS1333A2C40D	–	4211.A40
3/16	0.1870	0.1885	**4.5**	0.220	0.260	0.310	0.500	1.815	1.27	0.800	5,150	-65	200	32.0	MS17985C345 / NAS1333A2C45D	–	4211.A45
3/16	0.1870	0.1885	**5.5**	0.220	0.260	0.310	0.500	1.815	1.27	0.800	5,150	-65	200	35.5	MS17985C355 / NAS1333A2C55D	–	4211.A55
3/16	0.1870	0.1885	**6.0**	0.220	0.260	0.310	0.500	1.815	1.27	0.800	5,150	-65	200	37.0	MS17985C360 / NAS1333A2C60D	–	4211.A60
1/4	0.2470	0.2485	**0.4**	0.289	0.290	0.310	0.500	1.815	1.27	0.800	9,200	-65	200	20.8	MS17985C404 / NAS1334A2C04D	5315-00-702-1149 / 5315-00-935-5935	4211.B04
1/4	0.2470	0.2485	**0.5**	0.289	0.290	0.310	0.500	1.815	1.27	0.800	9,200	-65	200	21.0	MS17985C405 / NAS1334A2C05D	5315-00-929-4128	4211.B05
1/4	0.2470	0.2485	**0.6**	0.289	0.290	0.310	0.500	1.815	1.27	0.800	9,200	-65	200	22.0	MS17985C406 / NAS1334A2C06D	5315-01-158-9938 / 5315-00-773-9587	4211.B06
1/4	0.2470	0.2485	**0.7**	0.289	0.290	0.310	0.500	1.815	1.27	0.800	9,200	-65	200	22.0	MS17985C407 / NAS1334A2C07D	5315-00-702-4893 / 5315-00-985-6709	4211.B07
1/4	0.2470	0.2485	**0.8**	0.289	0.290	0.310	0.500	1.815	1.27	0.800	9,200	-65	200	23.0	MS17985C408 / NAS1334A2C08D	5315-00-880-1420	4211.B08
1/4	0.2470	0.2485	**0.9**	0.289	0.290	0.310	0.500	1.815	1.27	0.800	9,200	-65	200	29.0	MS17985C409 / NAS1334A2C09D	5315-00-717-3976 / 5315-00-978-6192	4211.B09
1/4	0.2470	0.2485	**1.0**	0.289	0.290	0.310	0.500	1.815	1.27	0.800	9,200	-65	200	27.0	MS17985C410 / NAS1334A2C10D	5315-00-702-4913 / 5315-00-104-9429	4211.B10
1/4	0.2470	0.2485	**1.1**	0.289	0.290	0.310	0.500	1.815	1.27	0.800	9,200	-65	200	30.0	MS17985C411 / NAS1334A2C11D	–	4211.B11
1/4	0.2470	0.2485	**1.2**	0.289	0.290	0.310	0.500	1.815	1.27	0.800	9,200	-65	200	31.0	MS17985C412 / NAS1334A2C12D	–	4211.B12
1/4	0.2470	0.2485	**1.3**	0.289	0.290	0.310	0.500	1.815	1.27	0.800	9,200	-65	200	29.0	MS17985C413 / NAS1334A2C13D	5315-00-702-4915 / 5315-01-641-8541	4211.B13
1/4	0.2470	0.2485	**1.4**	0.289	0.290	0.310	0.500	1.815	1.27	0.800	9,200	-65	200	27.0	MS17985C414 / NAS1334A2C14D	–	4211.B14
1/4	0.2470	0.2485	**1.5**	0.289	0.290	0.310	0.500	1.815	1.27	0.800	9,200	-65	200	30.0	MS17985C415 / NAS1334A2C15D	5315-00-702-4898	4211.B15
1/4	0.2470	0.2485	**1.6**	0.289	0.290	0.310	0.500	1.815	1.27	0.800	9,200	-65	200	24.0	MS17985C416 / NAS1334A2C16D	–	4211.B16
1/4	0.2470	0.2485	**1.7**	0.289	0.290	0.310	0.500	1.815	1.27	0.800	9,200	-65	200	28.8	MS17985C417 / NAS1334A2C17D	5315-00-244-2900	4211.B17
1/4	0.2470	0.2485	**1.8**	0.289	0.290	0.310	0.500	1.815	1.27	0.800	9,200	-65	200	32.0	MS17985C418 / NAS1334A2C18D	5315-00-880-7756 / 5315-00-053-8087	4211.B18
1/4	0.2470	0.2485	**2.0**	0.289	0.290	0.310	0.500	1.815	1.27	0.800	9,200	-65	200	33.0	MS17985C420 / NAS1334A2C20D	5315-00-216-5836	4211.B20
1/4	0.2470	0.2485	**2.1**	0.289	0.290	0.310	0.500	1.815	1.27	0.800	9,200	-65	200	34.0	MS17985C421 / NAS1334A2C21D	5315-00-702-1099	4211.B21
1/4	0.2470	0.2485	**2.3**	0.289	0.290	0.310	0.500	1.815	1.27	0.800	9,200	-65	200	32.5	MS17985C423 / NAS1334A2C23D	–	4211.B23
1/4	0.2470	0.2485	**2.4**	0.289	0.290	0.310	0.500	1.815	1.27	0.800	9,200	-65	200	32.0	MS17985C424 / NAS1334A2C24D	5315-01-070-4299	4211.B24
1/4	0.2470	0.2485	**2.5**	0.289	0.290	0.310	0.500	1.815	1.27	0.800	9,200	-65	200	33.0	MS17985C425 / NAS1334A2C25D	5315-01-134-3335	4211.B25
1/4	0.2470	0.2485	**2.6**	0.289	0.290	0.310	0.500	1.815	1.27	0.800	9,200	-65	200	37.0	MS17985C426 / NAS1334A2C26D	5315-00-170-1724	4211.B26
1/4	0.2470	0.2485	**2.7**	0.289	0.290	0.310	0.500	1.815	1.27	0.800	9,200	-65	200	40.0	MS17985C427 / NAS1334A2C27D	5315-00-528-4802	4211.B27
1/4	0.2470	0.2485	**2.8**	0.289	0.290	0.310	0.500	1.815	1.27	0.800	9,200	-65	200	38.0	MS17985C428 / NAS1334A2C28D	5315-00-465-6664 / 5315-00-702-1120	4211.B28
1/4	0.2470	0.2485	**2.9**	0.289	0.290	0.310	0.500	1.815	1.27	0.800	9,200	-65	200	36.2	MS17985C429 / NAS1334A2C29D	–	4211.B29

chanhvinh.com

Nominal diameter A	A min.	A max.	Clamping length L +0.02 0	Dimensions							Shearing resistance, two-shear min.	Temperature		Weight	Standard	NSN (National Stock Number)	Art. No.
				B ±0.005	C 0 -0.04	D max.	E max.	F max.	G max.	H min.		min.	max.				
[in]	[in]	[in]	[in]	[in]							[lbf]	[°F]		[g]			
1/4	0.2470	0.2485	3.0	0.289	0.290	0.310	0.500	1.815	1.27	0.800	9,200	-65	200	39.0	MS17985C430 / NAS1334A2C30D	5315-00-702-4905	4211.B30
1/4	0.2470	0.2485	3.1	0.289	0.290	0.310	0.500	1.815	1.27	0.800	9,200	-65	200	43.0	MS17985C431 / NAS1334A2C31D	–	4211.B31
1/4	0.2470	0.2485	3.2	0.289	0.290	0.310	0.500	1.815	1.27	0.800	9,200	-65	200	37.0	MS17985C432 / NAS1334A2C32D	–	4211.B32
1/4	0.2470	0.2485	3.3	0.289	0.290	0.310	0.500	1.815	1.27	0.800	9,200	-65	200	38.0	MS17985C433 / NAS1334A2C33D	–	4211.B33
1/4	0.2470	0.2485	3.5	0.289	0.290	0.310	0.500	1.815	1.27	0.800	9,200	-65	200	42.0	MS17985C435 / NAS1334A2C35D	–	4211.B35
1/4	0.2470	0.2485	3.7	0.289	0.290	0.310	0.500	1.815	1.27	0.800	9,200	-65	200	40.7	MS17985C437 / NAS1334A2C37D	–	4211.B37
1/4	0.2470	0.2485	4.0	0.289	0.290	0.310	0.500	1.815	1.27	0.800	9,200	-65	200	42.0	MS17985C440 / NAS1334A2C40D	5315-00-905-9214	4211.B40
1/4	0.2470	0.2485	4.2	0.289	0.290	0.310	0.500	1.815	1.27	0.800	9,200	-65	200	43.7	MS17985C442 / NAS1334A2C42D	–	4211.B42
1/4	0.2470	0.2485	5.0	0.289	0.290	0.310	0.500	1.815	1.27	0.800	9,200	-65	200	49.1	MS17985C450 / NAS1334A2C50D	–	4211.B50
1/4	0.2470	0.2485	5.2	0.289	0.290	0.310	0.500	1.815	1.27	0.800	9,200	-65	200	59.0	MS17985C452 / NAS1334A2C52D	–	4211.B52
1/4	0.2470	0.2485	6.0	0.289	0.290	0.310	0.500	1.815	1.27	0.800	9,200	-65	200	64.0	MS17985C460 / NAS1334A2C60D	–	4211.B60
5/16	0.3095	0.3110	0.3	0.375	0.330	0.310	0.500	1.815	1.27	0.800	14,400	-65	200	27.0	MS17985C503 / NAS1335A2C03D	–	4211.C03
5/16	0.3095	0.3110	0.4	0.375	0.330	0.310	0.500	1.815	1.27	0.800	14,400	-65	200	26.0	MS17985C504 / NAS1335A2C04D	–	4211.C04
5/16	0.3095	0.3110	0.5	0.375	0.330	0.310	0.500	1.815	1.27	0.800	14,400	-65	200	25.0	MS17985C505 / NAS1335A2C05D	–	4211.C05
5/16	0.3095	0.3110	0.6	0.375	0.330	0.310	0.500	1.815	1.27	0.800	14,400	-65	200	30.0	MS17985C506 / NAS1335A2C06D	5315-00-059-5434	4211.C06
5/16	0.3095	0.3110	0.8	0.375	0.330	0.310	0.500	1.815	1.27	0.800	14,400	-65	200	27.0	MS17985C508 / NAS1335A2C08D	5315-00-702-3113	4211.C08
5/16	0.3095	0.3110	0.9	0.375	0.330	0.310	0.500	1.815	1.27	0.800	14,400	-65	200	33.0	MS17985C509 / NAS1335A2C09D	5315-01-232-7043 / 5315-00-702-3112	4211.C09
5/16	0.3095	0.3110	1.0	0.375	0.330	0.310	0.500	1.815	1.27	0.800	14,400	-65	200	29.0	MS17985C510 / NAS1335A2C10D	5315-01-105-7351 / 5315-01-641-6561	4211.C10
5/16	0.3095	0.3110	1.1	0.375	0.330	0.310	0.500	1.815	1.27	0.800	14,400	-65	200	35.0	MS17985C511 / NAS1335A2C11D	5315-00-420-9673 / 5340-99-139-8863	4211.C11
5/16	0.3095	0.3110	1.2	0.375	0.330	0.310	0.500	1.815	1.27	0.800	14,400	-65	200	31.0	MS17985C512 / NAS1335A2C12D	5315-00-702-1259 / 5315-00-702-3110	4211.C12
5/16	0.3095	0.3110	1.3	0.375	0.330	0.310	0.500	1.815	1.27	0.800	14,400	-65	200	37.0	MS17985C513 / NAS1335A2C13D	5315-00-702-3106 / 5315-00-958-5149	4211.C13
5/16	0.3095	0.3110	1.5	0.375	0.330	0.310	0.500	1.815	1.27	0.800	14,400	-65	200	38.0	MS17985C515 / NAS1335A2C15D	5315-00-702-3104	4211.C15
5/16	0.3095	0.3110	1.6	0.375	0.330	0.310	0.500	1.815	1.27	0.800	14,400	-65	200	35.0	MS17985C516 / NAS1335A2C16D	5315-00-418-2536	4211.C16
5/16	0.3095	0.3110	1.8	0.375	0.330	0.310	0.500	1.815	1.27	0.800	14,400	-65	200	41.0	MS17985C518 / NAS1335A2C18D	–	4211.C18
5/16	0.3095	0.3110	2.0	0.375	0.330	0.310	0.500	1.815	1.27	0.800	14,400	-65	200	43.0	MS17985C520 / NAS1335A2C20D	–	4211.C20
5/16	0.3095	0.3110	2.2	0.375	0.330	0.310	0.500	1.815	1.27	0.800	14,400	-65	200	46.0	MS17985C522 / NAS1335A2C22D	–	4211.C22
5/16	0.3095	0.3110	2.3	0.375	0.330	0.310	0.500	1.815	1.27	0.800	14,400	-65	200	47.0	MS17985C523 / NAS1335A2C23D	5315-00-503-5781	4211.C23
5/16	0.3095	0.3110	2.4	0.375	0.330	0.310	0.500	1.815	1.27	0.800	14,400	-65	200	42.0	MS17985C524 / NAS1335A2C24D	–	4211.C24
5/16	0.3095	0.3110	2.5	0.375	0.330	0.310	0.500	1.815	1.27	0.800	14,400	-65	200	43.0	MS17985C525 / NAS1335A2C25D	5315-01-618-4385	4211.C25
5/16	0.3095	0.3110	2.6	0.375	0.330	0.310	0.500	1.815	1.27	0.800	14,400	-65	200	44.0	MS17985C526 / NAS1335A2C26D	–	4211.C26
5/16	0.3095	0.3110	2.7	0.375	0.330	0.310	0.500	1.815	1.27	0.800	14,400	-65	200	46.0	MS17985C527 / NAS1335A2C27D	–	4211.C27

Nominal diameter A	A min.	A max.	Clamping length L +0.02 0	Dimensions							Shearing resistance, two-shear min.	min.	max.		Standard	NSN (National Stock Number)	Art. No.
				B ±0.005	C 0 -0.04	D max.	E max.	F max.	G max.	H min.							
[in]	[in]	[in]	[in]	[in]							[lbf]	[°F]		[g]			
5/16	0.3095	0.3110	**2.8**	0.375	0.330	0.310	0.500	1.815	1.27	0.800	14,400	-65	200	46.0	MS17985C528 / NAS1335A2C28D	–	4211.C28
5/16	0.3095	0.3110	**2.9**	0.375	0.330	0.310	0.500	1.815	1.27	0.800	14,400	-65	200	49.0	MS17985C529 / NAS1335A2C29D	5315-01-012-3433	4211.C29
5/16	0.3095	0.3110	**3.0**	0.375	0.330	0.310	0.500	1.815	1.27	0.800	14,400	-65	200	48.0	MS17985C530 / NAS1335A2C30D	5315-01-285-8978 / 5315-00-702-1260	4211.C30
5/16	0.3095	0.3110	**3.1**	0.375	0.330	0.310	0.500	1.815	1.27	0.800	14,400	-65	200	49.6	MS17985C531 / NAS1335A2C31D	–	4211.C31
5/16	0.3095	0.3110	**3.2**	0.375	0.330	0.310	0.500	1.815	1.27	0.800	14,400	-65	200	50.0	MS17985C532 / NAS1335A2C32D	–	4211.C32
5/16	0.3095	0.3110	**3.3**	0.375	0.330	0.310	0.500	1.815	1.27	0.800	14,400	-65	200	53.0	MS17985C533 / NAS1335A2C33D	–	4211.C33
5/16	0.3095	0.3110	**3.4**	0.375	0.330	0.310	0.500	1.815	1.27	0.800	14,400	-65	200	56.0	MS17985C534 / NAS1335A2C34D	–	4211.C34
5/16	0.3095	0.3110	**3.5**	0.375	0.330	0.310	0.500	1.815	1.27	0.800	14,400	-65	200	53.0	MS17985C535 / NAS1335A2C35D	–	4211.C35
5/16	0.3095	0.3110	**3.8**	0.375	0.330	0.310	0.500	1.815	1.27	0.800	14,400	-65	200	56.2	MS17985C538 / NAS1335A2C38D	–	4211.C38
5/16	0.3095	0.3110	**4.0**	0.375	0.330	0.310	0.500	1.815	1.27	0.800	14,400	-65	200	62.0	MS17985C540 / NAS1335A2C40D	–	4211.C40
5/16	0.3095	0.3110	**4.1**	0.375	0.330	0.310	0.500	1.815	1.27	0.800	14,400	-65	200	59.1	MS17985C541 / NAS1335A2C41D	–	4211.C41
5/16	0.3095	0.3110	**4.2**	0.375	0.330	0.310	0.500	1.815	1.27	0.800	14,400	-65	200	59.0	MS17985C542 / NAS1335A2C42D	–	4211.C42
5/16	0.3095	0.3110	**4.3**	0.375	0.330	0.310	0.500	1.815	1.27	0.800	14,400	-65	200	61.0	MS17985C543 / NAS1335A2C43D	–	4211.C43
5/16	0.3095	0.3110	**5.0**	0.375	0.330	0.310	0.500	1.815	1.27	0.800	14,400	-65	200	75.0	MS17985C550 / NAS1335A2C50D	5315-01-367-4191	4211.C50
5/16	0.3095	0.3110	**6.0**	0.375	0.330	0.310	0.500	1.815	1.27	0.800	14,400	-65	200	85.0	MS17985C560 / NAS1335A2C60D	–	4211.C60
3/8	0.3720	0.3735	**0.5**	0.440	0.365	0.390	0.625	2.065	1.45	0.850	20,700	-65	200	43.0	MS17985C605 / NAS1336A2C05D	5315-01-630-7320	4211.D05
3/8	0.3720	0.3735	**0.6**	0.440	0.365	0.390	0.625	2.065	1.45	0.850	20,700	-65	200	39.0	MS17985C606 / NAS1336A2C06D	5315-00-929-4129 / 5315-00-816-1738	4211.D06
3/8	0.3720	0.3735	**0.7**	0.440	0.365	0.390	0.625	2.065	1.45	0.850	20,700	-65	200	41.0	MS17985C607 / NAS1336A2C07D	5315-00-900-9660 / 5315-00-816-1740	4211.D07
3/8	0.3720	0.3735	**0.8**	0.440	0.365	0.390	0.625	2.065	1.45	0.850	20,700	-65	200	42.2	MS17985C608 / NAS1336A2C08D	5315-00-702-3182	4211.D08
3/8	0.3720	0.3735	**0.9**	0.440	0.365	0.390	0.625	2.065	1.45	0.850	20,700	-65	200	43.0	MS17985C609 / NAS1336A2C09D	–	4211.D09
3/8	0.3720	0.3735	**1.0**	0.440	0.365	0.390	0.625	2.065	1.45	0.850	20,700	-65	200	49.0	MS17985C610 / NAS1336A2C10D	5315-00-833-6289	4211.D10
3/8	0.3720	0.3735	**1.1**	0.440	0.365	0.390	0.625	2.065	1.45	0.850	20,700	-65	200	46.0	MS17985C611 / NAS1336A2C11D	–	4211.D11
3/8	0.3720	0.3735	**1.2**	0.440	0.365	0.390	0.625	2.065	1.45	0.850	20,700	-65	200	55.0	MS17985C612 / NAS1336A2C12D	–	4211.D12
3/8	0.3720	0.3735	**1.3**	0.440	0.365	0.390	0.625	2.065	1.45	0.850	20,700	-65	200	49.0	MS17985C613 / NAS1336A2C13D	5315-00-877-7322	4211.D13
3/8	0.3720	0.3735	**1.4**	0.440	0.365	0.390	0.625	2.065	1.45	0.850	20,700	-65	200	50.0	MS17985C614 / NAS1336A2C14D	5315-00-728-0731 / 5315-00-104-7662	4211.D14
3/8	0.3720	0.3735	**1.5**	0.440	0.365	0.390	0.625	2.065	1.45	0.850	20,700	-65	200	51.0	MS17985C615 / NAS1336A2C15D	5315-00-702-3185 / 5315-00-702-1293	4211.D15
3/8	0.3720	0.3735	**1.6**	0.440	0.365	0.390	0.625	2.065	1.45	0.850	20,700	-65	200	53.0	MS17985C616 / NAS1336A2C16D	–	4211.D16
3/8	0.3720	0.3735	**1.7**	0.440	0.365	0.390	0.625	2.065	1.45	0.850	20,700	-65	200	54.0	MS17985C617 / NAS1336A2C17D	5315-00-929-4079	4211.D17
3/8	0.3720	0.3735	**1.8**	0.440	0.365	0.390	0.625	2.065	1.45	0.850	20,700	-65	200	55.0	MS17985C618 / NAS1336A2C18D	5315-00-105-1190 / 5315-01-286-4368	4211.D18
3/8	0.3720	0.3735	**1.9**	0.440	0.365	0.390	0.625	2.065	1.45	0.850	20,700	-65	200	57.0	MS17985C619 / NAS1336A2C19D	–	4211.D19
3/8	0.3720	0.3735	**2.0**	0.440	0.365	0.390	0.625	2.065	1.45	0.850	20,700	-65	200	62.0	MS17985C620 / NAS1336A2C20D	–	4211.D20

chanhvinh.com

Nominal diameter A [in]	A min. [in]	A max. [in]	Clamping length L +0.02 0 [in]	Dimensions [in]							Shearing resistance, two-shear min. [lbf]	min. [°F]	max. [°F]	[g]	Standard	NSN (National Stock Number)	Art. No.
				B ±0.005	C 0 -0.04	D max.	E max.	F max.	G max.	H min.							
3/8	0.3720	0.3735	2.1	0.440	0.365	0.390	0.625	2.065	1.45	0.850	20,700	-65	200	59.9	MS17985C621 / NAS1336A2C21D	5315-00-702-3192	4211.D21
3/8	0.3720	0.3735	2.2	0.440	0.365	0.390	0.625	2.065	1.45	0.850	20,700	-65	200	61.0	MS17985C622 / NAS1336A2C22D	5315-00-932-3808 / 5315-00-702-1302	4211.D22
3/8	0.3720	0.3735	2.3	0.440	0.365	0.390	0.625	2.065	1.45	0.850	20,700	-65	200	63.0	MS17985C623 / NAS1336A2C23D	–	4211.D23
3/8	0.3720	0.3735	2.4	0.440	0.365	0.390	0.625	2.065	1.45	0.850	20,700	-65	200	64.0	MS17985C624 / NAS1336A2C24D	5315-00-027-5679	4211.D24
3/8	0.3720	0.3735	2.5	0.440	0.365	0.390	0.625	2.065	1.45	0.850	20,700	-65	200	72.0	MS17985C625 / NAS1336A2C25D	5315-00-702-3194	4211.D25
3/8	0.3720	0.3735	2.6	0.440	0.365	0.390	0.625	2.065	1.45	0.850	20,700	-65	200	70.0	MS17985C626 / NAS1336A2C26D	5315-01-118-8932	4211.D26
3/8	0.3720	0.3735	2.7	0.440	0.365	0.390	0.625	2.065	1.45	0.850	20,700	-65	200	68.0	MS17985C627 / NAS1336A2C27D	5315-01-292-3419 / 5315-00-976-3994	4211.D27
3/8	0.3720	0.3735	2.8	0.440	0.365	0.390	0.625	2.065	1.45	0.850	20,700	-65	200	72.0	MS17985C628 / NAS1336A2C28D	5315-00-702-3198	4211.D28
3/8	0.3720	0.3735	3.0	0.440	0.365	0.390	0.625	2.065	1.45	0.850	20,700	-65	200	75.0	MS17985C630 / NAS1336A2C30D	5315-00-702-3210	4211.D30
3/8	0.3720	0.3735	3.1	0.440	0.365	0.390	0.625	2.065	1.45	0.850	20,700	-65	200	80.0	MS17985C631 / NAS1336A2C31D	5315-01-213-4433	4211.D31
3/8	0.3720	0.3735	3.2	0.440	0.365	0.390	0.625	2.065	1.45	0.850	20,700	-65	200	80.0	MS17985C632 / NAS1336A2C32D	5315-00-548-4787	4211.D32
3/8	0.3720	0.3735	3.3	0.440	0.365	0.390	0.625	2.065	1.45	0.850	20,700	-65	200	76.2	MS17985C633 / NAS1336A2C33D	5315-00-725-4304	4211.D33
3/8	0.3720	0.3735	3.4	0.440	0.365	0.390	0.625	2.065	1.45	0.850	20,700	-65	200	77.5	MS17985C634 / NAS1336A2C34D	5315-00-150-3032	4211.D34
3/8	0.3720	0.3735	3.5	0.440	0.365	0.390	0.625	2.065	1.45	0.850	20,700	-65	200	85.0	MS17985C635 / NAS1336A2C35D	5315-99-462-1521	4211.D35
3/8	0.3720	0.3735	4.0	0.440	0.365	0.390	0.625	2.065	1.45	0.850	20,700	-65	200	85.0	MS17985C640 / NAS1336A2C40D	5315-01-516-7703	4211.D40
3/8	0.3720	0.3735	4.1	0.440	0.365	0.390	0.625	2.065	1.45	0.850	20,700	-65	200	86.0	MS17985C641 / NAS1336A2C41D	–	4211.D41
3/8	0.3720	0.3735	4.2	0.440	0.365	0.390	0.625	2.065	1.45	0.850	20,700	-65	200	89.0	MS17985C642 / NAS1336A2C42D	5315-01-011-0672	4211.D42
3/8	0.3720	0.3735	4.3	0.440	0.365	0.390	0.625	2.065	1.45	0.850	20,700	-65	200	89.8	MS17985C643 / NAS1336A2C43D	5315-99-664-7581	4211.D43
3/8	0.3720	0.3735	4.5	0.440	0.365	0.390	0.625	2.065	1.45	0.850	20,700	-65	200	95.0	MS17985C645 / NAS1336A2C45D	–	4211.D45
3/8	0.3720	0.3735	4.7	0.440	0.365	0.390	0.625	2.065	1.45	0.850	20,700	-65	200	95.2	MS17985C647 / NAS1336A2C47D	–	4211.D47
3/8	0.3720	0.3735	4.8	0.440	0.365	0.390	0.625	2.065	1.45	0.850	20,700	-65	200	95.0	MS17985C648 / NAS1336A2C48D	–	4211.D48
3/8	0.3720	0.3735	5.0	0.440	0.365	0.390	0.625	2.065	1.45	0.850	20,700	-65	200	98.0	MS17985C650 / NAS1336A2C50D	5315-00-151-5843	4211.D50
3/8	0.3720	0.3735	5.5	0.440	0.365	0.390	0.625	2.065	1.45	0.850	20,700	-65	200	106.0	MS17985C655 / NAS1336A2C55D	–	4211.D55
3/8	0.3720	0.3735	6.0	0.440	0.365	0.390	0.625	2.065	1.45	0.850	20,700	-65	200	113.0	MS17985C660 / NAS1336A2C60D	–	4211.D60
7/16	0.4345	0.4360	0.8	0.509	0.380	0.390	0.625	2.065	1.47	0.850	28,500	-65	200	54.0	MS17985C708 / NAS1337A2C08D	5315-00-150-3029	4211.E08
7/16	0.4345	0.4360	1.0	0.509	0.380	0.390	0.625	2.065	1.47	0.850	28,500	-65	200	57.0	MS17985C710 / NAS1337A2C10D	–	4211.E10
7/16	0.4345	0.4360	1.1	0.509	0.380	0.390	0.625	2.065	1.47	0.850	28,500	-65	200	53.6	MS17985C711 / NAS1337A2C11D	–	4211.E11
7/16	0.4345	0.4360	1.2	0.509	0.380	0.390	0.625	2.065	1.47	0.850	28,500	-65	200	61.0	MS17985C712 / NAS1337A2C12D	–	4211.E12
7/16	0.4345	0.4360	1.5	0.509	0.380	0.390	0.625	2.065	1.47	0.850	28,500	-65	200	61.1	MS17985C715 / NAS1337A2C15D	–	4211.E15
7/16	0.4345	0.4360	1.6	0.509	0.380	0.390	0.625	2.065	1.47	0.850	28,500	-65	200	63.0	MS17985C716 / NAS1337A2C16D	5315-00-917-1860	4211.E16
7/16	0.4345	0.4360	1.8	0.509	0.380	0.390	0.625	2.065	1.47	0.850	28,500	-65	200	72.0	MS17985C718 / NAS1337A2C18D	–	4211.E18

Nominal diameter A	A min.	A max.	Clamping length L +0.02 0	Dimensions							Shearing resistance, two-shear min.	min.	max.		Standard	NSN (National Stock Number)	Art. No.
				B ±0.005	C 0 -0.04	D max.	E max.	F max.	G max.	H min.							
[in]	[in]	[in]	[in]	[in]							[lbf]	[°F]		[g]			
7/16	0.4345	0.4360	**2.0**	0.509	0.380	0.390	0.625	2.065	1.47	0.850	28,500	-65	200	70.4	MS17985C720 / NAS1337A2C20D	5315-01-031-1659	4211.E20
7/16	0.4345	0.4360	**2.1**	0.509	0.380	0.390	0.625	2.065	1.47	0.850	28,500	-65	200	76.0	MS17985C721 / NAS1337A2C21D	–	4211.E21
7/16	0.4345	0.4360	**2.3**	0.509	0.380	0.390	0.625	2.065	1.47	0.850	28,500	-65	200	82.0	MS17985C723 / NAS1337A2C23D	5315-00-182-9857	4211.E23
7/16	0.4345	0.4360	**2.4**	0.509	0.380	0.390	0.625	2.065	1.47	0.850	28,500	-65	200	84.0	MS17985C724 / NAS1337A2C24D	–	4211.E24
7/16	0.4345	0.4360	**2.5**	0.509	0.380	0.390	0.625	2.065	1.47	0.850	28,500	-65	200	90.0	MS17985C725 / NAS1337A2C25D	–	4211.E25
7/16	0.4345	0.4360	**2.6**	0.509	0.380	0.390	0.625	2.065	1.47	0.850	28,500	-65	200	88.0	MS17985C726 / NAS1337A2C26D	–	4211.E26
7/16	0.4345	0.4360	**2.7**	0.509	0.380	0.390	0.625	2.065	1.47	0.850	28,500	-65	200	83.0	MS17985C727 / NAS1337A2C27D	5315-01-619-1500	4211.E27
7/16	0.4345	0.4360	**2.8**	0.509	0.380	0.390	0.625	2.065	1.47	0.850	28,500	-65	200	85.0	MS17985C728 / NAS1337A2C28D	–	4211.E28
7/16	0.4345	0.4360	**2.9**	0.509	0.380	0.390	0.625	2.065	1.47	0.850	28,500	-65	200	86.0	MS17985C729 / NAS1337A2C29D	–	4211.E29
7/16	0.4345	0.4360	**3.0**	0.509	0.380	0.390	0.625	2.065	1.47	0.850	28,500	-65	200	88.9	MS17985C730 / NAS1337A2C30D	–	4211.E30
7/16	0.4345	0.4360	**3.1**	0.509	0.380	0.390	0.625	2.065	1.47	0.850	28,500	-65	200	90.0	MS17985C731 / NAS1337A2C31D	–	4211.E31
7/16	0.4345	0.4360	**3.2**	0.509	0.380	0.390	0.625	2.065	1.47	0.850	28,500	-65	200	92.6	MS17985C732 / NAS1337A2C32D	–	4211.E32
7/16	0.4345	0.4360	**3.3**	0.509	0.380	0.390	0.625	2.065	1.47	0.850	28,500	-65	200	94.5	MS17985C733 / NAS1337A2C33D	–	4211.E33
7/16	0.4345	0.4360	**3.6**	0.509	0.380	0.390	0.625	2.065	1.47	0.850	28,500	-65	200	106.0	MS17985C736 / NAS1337A2C36D	5315-01-605-9132	4211.E36
7/16	0.4345	0.4360	**4.0**	0.509	0.380	0.390	0.625	2.065	1.47	0.850	28,500	-65	200	106.0	MS17985C740 / NAS1337A2C40D	5315-01-609-6924	4211.E40
7/16	0.4345	0.4360	**4.2**	0.509	0.380	0.390	0.625	2.065	1.47	0.850	28,500	-65	200	117.0	MS17985C742 / NAS1337A2C42D	–	4211.E42
7/16	0.4345	0.4360	**4.6**	0.509	0.380	0.390	0.625	2.065	1.47	0.850	28,500	-65	200	119.0	MS17985C746 / NAS1337A2C46D	–	4211.E46
7/16	0.4345	0.4360	**5.0**	0.509	0.380	0.390	0.625	2.065	1.47	0.850	28,500	-65	200	126.0	MS17985C750 / NAS1337A2C50D	–	4211.E50
7/16	0.4345	0.4360	**5.3**	0.509	0.380	0.390	0.625	2.065	1.47	0.850	28,500	-65	200	156.0	MS17985C753 / NAS1337A2C53D	–	4211.E53
7/16	0.4345	0.4360	**5.5**	0.509	0.380	0.390	0.625	2.065	1.47	0.850	28,500	-65	200	145.0	MS17985C755 / NAS1337A2C55D	–	4211.E55
7/16	0.4345	0.4360	**5.6**	0.509	0.380	0.390	0.625	2.065	1.47	0.850	28,500	-65	200	145.0	MS17985C756 / NAS1337A2C56D	–	4211.E56
7/16	0.4345	0.4360	**5.8**	0.509	0.380	0.390	0.625	2.065	1.47	0.850	28,500	-65	200	139.0	MS17985C758 / NAS1337A2C58D	–	4211.E58
1/2	0.4970	0.4985	**0.8**	0.594	0.460	0.565	0.800	2.345	1.60	0.885	36,900	-65	200	69.6	MS17985C808 / NAS1338A2C08D	–	4211.F08
1/2	0.4970	0.4985	**0.9**	0.594	0.460	0.565	0.800	2.345	1.60	0.885	36,900	-65	200	71.0	MS17985C809 / NAS1338A2C09D	5315-00-539-5421	4211.F09
1/2	0.4970	0.4985	**1.0**	0.594	0.460	0.565	0.800	2.345	1.60	0.885	36,900	-65	200	82.0	MS17985C810 / NAS1338A2C10D	5315-00-218-1512	4211.F10
1/2	0.4970	0.4985	**1.1**	0.594	0.460	0.565	0.800	2.345	1.60	0.885	36,900	-65	200	76.0	MS17985C811 / NAS1338A2C11D	–	4211.F11
1/2	0.4970	0.4985	**1.2**	0.594	0.460	0.565	0.800	2.345	1.60	0.885	36,900	-65	200	87.0	MS17985C812 / NAS1338A2C12D	5315-00-500-0373 / 5315-00-850-6834	4211.F12
1/2	0.4970	0.4985	**1.3**	0.594	0.460	0.565	0.800	2.345	1.60	0.885	36,900	-65	200	81.8	MS17985C813 / NAS1338A2C13D	5315-00-964-3509	4211.F13
1/2	0.4970	0.4985	**1.4**	0.594	0.460	0.565	0.800	2.345	1.60	0.885	36,900	-65	200	94.0	MS17985C814 / NAS1338A2C14D	5315-01-016-3036	4211.F14
1/2	0.4970	0.4985	**1.5**	0.594	0.460	0.565	0.800	2.345	1.60	0.885	36,900	-65	200	93.0	MS17985C815 / NAS1338A2C15D	5315-01-523-2887 / 5315-00-685-0553	4211.F15
1/2	0.4970	0.4985	**1.6**	0.594	0.460	0.565	0.800	2.345	1.60	0.885	36,900	-65	200	89.1	MS17985C816 / NAS1338A2C16D	5315-00-702-4848	4211.F16

chanhvinh.com

Nominal diameter A [in]	A min. [in]	A max. [in]	Clamping length L +0.02 0 [in]	Dimensions [in]							Shearing resistance, two-shear min. [lbf]	min. [°F]	max. [°F]	[g]	Standard	NSN (National Stock Number)	Art. No.
				B ±0.005	C 0 -0.04	D max.	E max.	F max.	G max.	H min.							
1/2	0.4970	0.4985	1.7	0.594	0.460	0.565	0.800	2.345	1.60	0.885	36,900	-65	200	101.0	MS17985C817 / NAS1338A2C17D	–	4211.F17
1/2	0.4970	0.4985	1.8	0.594	0.460	0.565	0.800	2.345	1.60	0.885	36,900	-65	200	106.0	MS17985C818 / NAS1338A2C18D	5315-00-702-4859 / 5315-00-958-5157	4211.F18
1/2	0.4970	0.4985	1.9	0.594	0.460	0.565	0.800	2.345	1.60	0.885	36,900	-65	200	102.0	MS17985C819 / NAS1338A2C19D	5315-00-702-4860	4211.F19
1/2	0.4970	0.4985	2.0	0.594	0.460	0.565	0.800	2.345	1.60	0.885	36,900	-65	200	97.0	MS17985C820 / NAS1338A2C20D	5315-01-670-7871 / 5315-01-671-5356	4211.F20
1/2	0.4970	0.4985	2.1	0.594	0.460	0.565	0.800	2.345	1.60	0.885	36,900	-65	200	100.0	MS17985C821 / NAS1338A2C21D	5315-00-702-1078	4211.F21
1/2	0.4970	0.4985	2.2	0.594	0.460	0.565	0.800	2.345	1.60	0.885	36,900	-65	200	102.0	MS17985C822 / NAS1338A2C22D	5315-00-577-5495	4211.F22
1/2	0.4970	0.4985	2.3	0.594	0.460	0.565	0.800	2.345	1.60	0.885	36,900	-65	200	104.0	MS17985C823 / NAS1338A2C23D	–	4211.F23
1/2	0.4970	0.4985	2.4	0.594	0.460	0.565	0.800	2.345	1.60	0.885	36,900	-65	200	107.0	MS17985C824 / NAS1338A2C24D	5315-01-698-3180	4211.F24
1/2	0.4970	0.4985	2.5	0.594	0.460	0.565	0.800	2.345	1.60	0.885	36,900	-65	200	109.0	MS17985C825 / NAS1338A2C25D	–	4211.F25
1/2	0.4970	0.4985	2.6	0.594	0.460	0.565	0.800	2.345	1.60	0.885	36,900	-65	200	112.0	MS17985C826 / NAS1338A2C26D	5315-00-702-4879	4211.F26
1/2	0.4970	0.4985	2.8	0.594	0.460	0.565	0.800	2.345	1.60	0.885	36,900	-65	200	116.0	MS17985C828 / NAS1338A2C28D	5315-01-123-2445	4211.F28
1/2	0.4970	0.4985	2.9	0.594	0.460	0.565	0.800	2.345	1.60	0.885	36,900	-65	200	119.0	MS17985C829 / NAS1338A2C29D	5315-01-266-6508	4211.F29
1/2	0.4970	0.4985	3.0	0.594	0.460	0.565	0.800	2.345	1.60	0.885	36,900	-65	200	123.0	MS17985C830 / NAS1338A2C30D	5315-00-702-4889	4211.F30
1/2	0.4970	0.4985	3.1	0.594	0.460	0.565	0.800	2.345	1.60	0.885	36,900	-65	200	135.0	MS17985C831 / NAS1338A2C31D	5315-01-354-6805 / 5315-01-320-8271	4211.F31
1/2	0.4970	0.4985	3.2	0.594	0.460	0.565	0.800	2.345	1.60	0.885	36,900	-65	200	128.0	MS17985C832 / NAS1338A2C32D	5315-00-937-0672	4211.F32
1/2	0.4970	0.4985	3.3	0.594	0.460	0.565	0.800	2.345	1.60	0.885	36,900	-65	200	128.0	MS17985C833 / NAS1338A2C33D	5315-01-699-9212	4211.F33
1/2	0.4970	0.4985	3.4	0.594	0.460	0.565	0.800	2.345	1.60	0.885	36,900	-65	200	131.0	MS17985C834 / NAS1338A2C34D	–	4211.F34
1/2	0.4970	0.4985	3.5	0.594	0.460	0.565	0.800	2.345	1.60	0.885	36,900	-65	200	133.0	MS17985C835 / NAS1338A2C35D	5898-01-578-3023 / 5315-01-477-0251	4211.F35
1/2	0.4970	0.4985	3.6	0.594	0.460	0.565	0.800	2.345	1.60	0.885	36,900	-65	200	136.0	MS17985C836 / NAS1338A2C36D	5315-00-500-0454	4211.F36
1/2	0.4970	0.4985	3.7	0.594	0.460	0.565	0.800	2.345	1.60	0.885	36,900	-65	200	146.0	MS17985C837 / NAS1338A2C37D	5315-01-675-0626	4211.F37
1/2	0.4970	0.4985	3.8	0.594	0.460	0.565	0.800	2.345	1.60	0.885	36,900	-65	200	143.0	MS17985C838 / NAS1338A2C38D	5315-00-965-7310	4211.F38
1/2	0.4970	0.4985	4.0	0.594	0.460	0.565	0.800	2.345	1.60	0.885	36,900	-65	200	161.0	MS17985C840 / NAS1338A2C40D	5315-00-702-4854	4211.F40
1/2	0.4970	0.4985	4.2	0.594	0.460	0.565	0.800	2.345	1.60	0.885	36,900	-65	200	153.0	MS17985C842 / NAS1338A2C42D	–	4211.F42
1/2	0.4970	0.4985	4.3	0.594	0.460	0.565	0.800	2.345	1.60	0.885	36,900	-65	200	155.0	MS17985C843 / NAS1338A2C43D	–	4211.F43
1/2	0.4970	0.4985	4.4	0.594	0.460	0.565	0.800	2.345	1.60	0.885	36,900	-65	200	157.0	MS17985C844 / NAS1338A2C44D	–	4211.F44
1/2	0.4970	0.4985	4.5	0.594	0.460	0.565	0.800	2.345	1.60	0.885	36,900	-65	200	157.0	MS17985C845 / NAS1338A2C45D	5315-00-702-4858	4211.F45
1/2	0.4970	0.4985	4.6	0.594	0.460	0.565	0.800	2.345	1.60	0.885	36,900	-65	200	162.0	MS17985C846 / NAS1338A2C46D	–	4211.F46
1/2	0.4970	0.4985	4.7	0.594	0.460	0.565	0.800	2.345	1.60	0.885	36,900	-65	200	162.0	MS17985C847 / NAS1338A2C47D	5315-01-367-4196 / 5315-01-345-4742	4211.F47
1/2	0.4970	0.4985	4.8	0.594	0.460	0.565	0.800	2.345	1.60	0.885	36,900	-65	200	164.0	MS17985C848 / NAS1338A2C48D	5315-01-367-4198	4211.F48
1/2	0.4970	0.4985	4.9	0.594	0.460	0.565	0.800	2.345	1.60	0.885	36,900	-65	200	170.0	MS17985C849 / NAS1338A2C49D	–	4211.F49
1/2	0.4970	0.4985	5.0	0.594	0.460	0.565	0.800	2.345	1.60	0.885	36,900	-65	200	185.0	MS17985C850 / NAS1338A2C50D	–	4211.F50

chanhvinh.com

Nominal diameter A [in]	A min. [in]	A max. [in]	Clamping length L +0.02 0 [in]	Dimensions [in]							Shearing resistance, two-shear min. [lbf]	min. [°F]	max. [°F]	[g]	Standard	NSN (National Stock Number)	Art. No.
				B ±0.005	C 0 -0.04	D max.	E max.	F max.	G max.	H min.							
1/2	0.4970	0.4985	5.5	0.594	0.460	0.565	0.800	2.345	1.60	0.885	36,900	-65	200	181.0	MS17985C855 / NAS1338A2C55D	–	4211.F55
1/2	0.4970	0.4985	5.6	0.594	0.460	0.565	0.800	2.345	1.60	0.885	36,900	-65	200	187.0	MS17985C856 / NAS1338A2C56D	5315-01-211-1821	4211.F56
1/2	0.4970	0.4985	6.0	0.594	0.460	0.565	0.800	2.345	1.60	0.885	36,900	-65	200	196.0	MS17985C860 / NAS1338A2C60D	–	4211.F60
9/16	0.5595	0.5610	1.0	0.666	0.510	0.565	0.800	2.345	1.60	0.885	46,700	-65	200	90.0	MS17985C910 / NAS1339A2C10D	–	4211.G10
9/16	0.5595	0.5610	1.2	0.666	0.510	0.565	0.800	2.345	1.60	0.885	46,700	-65	200	90.0	MS17985C912 / NAS1339A2C12D	–	4211.G12
9/16	0.5595	0.5610	1.7	0.666	0.510	0.565	0.800	2.345	1.60	0.885	46,700	-65	200	105.0	MS17985C917 / NAS1339A2C17D	–	4211.G17
9/16	0.5595	0.5610	2.4	0.666	0.510	0.565	0.800	2.345	1.60	0.885	46,700	-65	200	128.0	MS17985C924 / NAS1339A2C24D	–	4211.G24
9/16	0.5595	0.5610	2.5	0.666	0.510	0.565	0.800	2.345	1.60	0.885	46,700	-65	200	130.0	MS17985C925 / NAS1339A2C25D	–	4211.G25
9/16	0.5595	0.5610	3.1	0.666	0.510	0.565	0.800	2.345	1.60	0.885	46,700	-65	200	–	MS17985C931 / NAS1339A2C31D	5315-01-306-2463	4211.G31
9/16	0.5595	0.5610	3.2	0.666	0.510	0.565	0.800	2.345	1.60	0.885	46,700	-65	200	151.0	MS17985C932 / NAS1339A2C32D	–	4211.G32
9/16	0.5595	0.5610	3.6	0.666	0.510	0.565	0.800	2.345	1.60	0.885	46,700	-65	200	163.0	MS17985C936 / NAS1339A2C36D	–	4211.G36
9/16	0.5595	0.5610	4.0	0.666	0.510	0.565	0.800	2.345	1.60	0.885	46,700	-65	200	175.0	MS17985C940 / NAS1339A2C40D	–	4211.G40
9/16	0.5595	0.5610	5.0	0.666	0.510	0.565	0.800	2.345	1.60	0.885	46,700	-65	200	211.0	MS17985C950 / NAS1339A2C50D	–	4211.G50
9/16	0.5595	0.5610	5.5	0.666	0.510	0.565	0.800	2.345	1.60	0.885	46,700	-65	200	225.0	MS17985C955 / NAS1339A2C55D	–	4211.G55
5/8	0.6220	0.6240	1.4	0.750	0.580	0.580	0.975	3.100	1.70	0.980	57,800	-65	200	165.0	MS17985C1014 / NAS1340A2C14D	5315-00-702-3128	4211.H14
5/8	0.6220	0.6240	1.5	0.750	0.580	0.580	0.975	3.100	1.70	0.980	57,800	-65	200	148.0	MS17985C1015 / NAS1340A2C15D	–	4211.H15
5/8	0.6220	0.6240	1.6	0.750	0.580	0.580	0.975	3.100	1.70	0.980	57,800	-65	200	155.0	MS17985C1016 / NAS1340A2C16D	–	4211.H16
5/8	0.6220	0.6240	1.8	0.750	0.580	0.580	0.975	3.100	1.70	0.980	57,800	-65	200	160.0	MS17985C1018 / NAS1340A2C18D	–	4211.H18
5/8	0.6220	0.6240	2.0	0.750	0.580	0.580	0.975	3.100	1.70	0.980	57,800	-65	200	167.0	MS17985C1020 / NAS1340A2C20D	–	4211.H20
5/8	0.6220	0.6240	2.2	0.750	0.580	0.580	0.975	3.100	1.70	0.980	57,800	-65	200	178.0	MS17985C1022 / NAS1340A2C22D	5315-01-033-6091	4211.H22
5/8	0.6220	0.6240	2.5	0.750	0.580	0.580	0.975	3.100	1.70	0.980	57,800	-65	200	186.0	MS17985C1025 / NAS1340A2C25D	5315-00-702-3121	4211.H25
5/8	0.6220	0.6240	2.6	0.750	0.580	0.580	0.975	3.100	1.70	0.980	57,800	-65	200	190.0	MS17985C1026 / NAS1340A2C26D	–	4211.H26
5/8	0.6220	0.6240	2.7	0.750	0.580	0.580	0.975	3.100	1.70	0.980	57,800	-65	200	194.0	MS17985C1027 / NAS1340A2C27D	–	4211.H27
5/8	0.6220	0.6240	3.0	0.750	0.580	0.580	0.975	3.100	1.70	0.980	57,800	-65	200	205.0	MS17985C1030 / NAS1340A2C30D	–	4211.H30
5/8	0.6220	0.6240	3.2	0.750	0.580	0.580	0.975	3.100	1.70	0.980	57,800	-65	200	216.0	MS17985C1032 / NAS1340A2C32D	–	4211.H32
5/8	0.6220	0.6240	3.3	0.750	0.580	0.580	0.975	3.100	1.70	0.980	57,800	-65	200	220.0	MS17985C1033 / NAS1340A2C33D	5315-01-368-5268	4211.H33
5/8	0.6220	0.6240	3.5	0.750	0.580	0.580	0.975	3.100	1.70	0.980	57,800	-65	200	228.0	MS17985C1035 / NAS1340A2C35D	–	4211.H35
5/8	0.6220	0.6240	3.8	0.750	0.580	0.580	0.975	3.100	1.70	0.980	57,800	-65	200	236.0	MS17985C1038 / NAS1340A2C38D	–	4211.H38
5/8	0.6220	0.6240	4.0	0.750	0.580	0.580	0.975	3.100	1.70	0.980	57,800	-65	200	243.0	MS17985C1040 / NAS1340A2C40D	5315-00-232-8485 / 5315-01-148-9800	4211.H40
5/8	0.6220	0.6240	4.5	0.750	0.580	0.580	0.975	3.100	1.70	0.980	57,800	-65	200	262.0	MS17985C1045 / NAS1340A2C45D	–	4211.H45
5/8	0.6220	0.6240	4.8	0.750	0.580	0.580	0.975	3.100	1.70	0.980	57,800	-65	200	274.0	MS17985C1048 / NAS1340A2C48D	5315-00-595-6021	4211.H48

chanhvinh.com

Nominal diameter A	A min.	A max.	Clamping length L +0.02 0	Dimensions							Shearing resistance, two-shear min.	min.	max.		Standard	NSN (National Stock Number)	Art. No.
				B ±0.005	C 0 -0.04	D max.	E max.	F max.	G max.	H min.							
[in]	[in]	[in]	[in]	[in]							[lbf]	[°F]		[g]			
5/8	0.6220	0.6240	**5.0**	0.750	0.580	0.580	0.975	3.100	1.70	0.980	57,800	-65	200	286.0	MS17985C1050 / NAS1340A2C50D	5315-00-595-6021	**4211.H50**
5/8	0.6220	0.6240	**5.2**	0.750	0.580	0.580	0.975	3.100	1.70	0.980	57,800	-65	200	293.0	MS17985C1052 / NAS1340A2C52D	5315-00-595-6021	**4211.H52**
5/8	0.6220	0.6240	**5.5**	0.750	0.580	0.580	0.975	3.100	1.70	0.980	57,800	-65	200	305.0	MS17985C1055 / NAS1340A2C55D	5315-00-595-6021	**4211.H55**
5/8	0.6220	0.6240	**6.0**	0.750	0.580	0.580	0.975	3.100	1.70	0.980	57,800	-65	200	319.0	MS17985C1060 / NAS1340A2C60D	–	**4211.H60**
3/4	0.7470	0.7485	**1.1**	0.887	0.670	0.700	1.000	3.100	1.72	1.030	83,200	-65	200	170.0	MS17985C1211 / NAS1341A2C11D	–	**4211.K11**
3/4	0.7470	0.7485	**1.6**	0.887	0.670	0.700	1.000	3.100	1.72	1.030	83,200	-65	200	200.0	MS17985C1216 / NAS1341A2C16D	5315-00-702-3133	**4211.K16**
3/4	0.7470	0.7485	**1.7**	0.887	0.670	0.700	1.000	3.100	1.72	1.030	83,200	-65	200	203.0	MS17985C1217 / NAS1341A2C17D	5315-00-702-3133	**4211.K17**
3/4	0.7470	0.7485	**1.9**	0.887	0.670	0.700	1.000	3.100	1.72	1.030	83,200	-65	200	216.0	MS17985C1219 / NAS1341A2C19D	–	**4211.K19**
3/4	0.7470	0.7485	**2.0**	0.887	0.670	0.700	1.000	3.100	1.72	1.030	83,200	-65	200	220.0	MS17985C1220 / NAS1341A2C20D	5315-01-332-4598	**4211.K20**
3/4	0.7470	0.7485	**2.2**	0.887	0.670	0.700	1.000	3.100	1.72	1.030	83,200	-65	200	231.0	MS17985C1222 / NAS1341A2C22D	5315-01-013-8491 / 5315-00-052-3838	**4211.K22**
3/4	0.7470	0.7485	**2.4**	0.887	0.670	0.700	1.000	3.100	1.72	1.030	83,200	-65	200	243.0	MS17985C1224 / NAS1341A2C24D	–	**4211.K24**
3/4	0.7470	0.7485	**2.5**	0.887	0.670	0.700	1.000	3.100	1.72	1.030	83,200	-65	200	249.0	MS17985C1225 / NAS1341A2C25D	5315-01-710-9689 / 5315-00-702-3136	**4211.K25**
3/4	0.7470	0.7485	**2.8**	0.887	0.670	0.700	1.000	3.100	1.72	1.030	83,200	-65	200	265.0	MS17985C1228 / NAS1341A2C28D	5315-00-702-3139	**4211.K28**
3/4	0.7470	0.7485	**2.9**	0.887	0.670	0.700	1.000	3.100	1.72	1.030	83,200	-65	200	270.0	MS17985C1229 / NAS1341A2C29D	–	**4211.K29**
3/4	0.7470	0.7485	**3.0**	0.887	0.670	0.700	1.000	3.100	1.72	1.030	83,200	-65	200	276.0	MS17985C1230 / NAS1341A2C30D	5315-00-702-1359	**4211.K30**
3/4	0.7470	0.7485	**3.1**	0.887	0.670	0.700	1.000	3.100	1.72	1.030	83,200	-65	200	281.0	MS17985C1231 / NAS1341A2C31D	5315-01-194-8549	**4211.K31**
3/4	0.7470	0.7485	**3.3**	0.887	0.670	0.700	1.000	3.100	1.72	1.030	83,200	-65	200	292.0	MS17985C1233 / NAS1341A2C33D	–	**4211.K33**
3/4	0.7470	0.7485	**3.6**	0.887	0.670	0.700	1.000	3.100	1.72	1.030	83,200	-65	200	310.0	MS17985C1236 / NAS1341A2C36D	–	**4211.K36**
3/4	0.7470	0.7485	**3.7**	0.887	0.670	0.700	1.000	3.100	1.72	1.030	83,200	-65	200	315.0	MS17985C1237 / NAS1341A2C37D	–	**4211.K37**
3/4	0.7470	0.7485	**4.0**	0.887	0.670	0.700	1.000	3.100	1.72	1.030	83,200	-65	200	331.0	MS17985C1240 / NAS1341A2C40D	–	**4211.K40**
3/4	0.7470	0.7485	**4.2**	0.887	0.670	0.700	1.000	3.100	1.72	1.030	83,200	-65	200	342.0	MS17985C1242 / NAS1341A2C42D	–	**4211.K42**
3/4	0.7470	0.7485	**4.5**	0.887	0.670	0.700	1.000	3.100	1.72	1.030	83,200	-65	200	359.0	MS17985C1245 / NAS1341A2C45D	–	**4211.K45**
3/4	0.7470	0.7485	**5.0**	0.887	0.670	0.700	1.000	3.100	1.72	1.030	83,200	-65	200	387.0	MS17985C1250 / NAS1341A2C50D	5315-00-165-7624	**4211.K50**
3/4	0.7470	0.7485	**5.1**	0.887	0.670	0.700	1.000	3.100	1.72	1.030	83,200	-65	200	392.0	MS17985C1251 / NAS1341A2C51D	5315-00-936-6129	**4211.K51**
7/8	0.8720	0.8735	**1.6**	1.046	0.760	0.840	1.320	3.520	2.17	1.310	112,500	-65	200	325.0	MS17985C1416 / NAS1342A2C16D	5315-01-272-8612	**4211.L16**
7/8	0.8720	0.8735	**2.5**	1.046	0.760	0.840	1.320	3.520	2.17	1.310	112,500	-65	200	392.0	MS17985C1425 / NAS1342A2C25D	5315-01-033-6089	**4211.L25**
7/8	0.8720	0.8735	**4.0**	1.046	0.760	0.840	1.320	3.520	2.17	1.310	112,500	-65	200	95.0	MS17985C1440 / NAS1342A2C40D	5315-01-367-6441	**4211.L40**
1	0.9970	0.9985	**1.0**	1.219	0.810	0.950	1.320	3.520	2.17	1.310	147,200	-65	200	332.0	MS17985C1610 / NAS1343A2C10D	–	**4211.M10**
1	0.9970	0.9985	**1.5**	1.219	0.810	0.950	1.320	3.520	2.17	1.310	147,200	-65	200	382.0	MS17985C1615 / NAS1343A2C15D	–	**4211.M15**
1	0.9970	0.9985	**2.0**	1.219	0.810	0.950	1.320	3.520	2.17	1.310	147,200	-65	200	431.0	MS17985C1620 / NAS1343A2C20D	–	**4211.M20**
1	0.9970	0.9985	**2.9**	1.219	0.810	0.950	1.320	3.520	2.17	1.310	147,200	-65	200	520.0	MS17985C1629 / NAS1343A2C29D	–	**4211.M29**

chanhvinh.com

Nominal diameter A [in]	A min. [in]	A max. [in]	Clamping length L +0.02 0 [in]	Dimensions [in]							Shearing resistance, two-shear min. [lbf]	min. [°F]	max. [°F]	[g]	Standard	NSN (National Stock Number)	Art. No.
				B ±0.005	C 0 -0.04	D max.	E max.	F max.	G max.	H min.							
1	0.9970	0.9985	**3.1**	1.219	0.810	0.950	1.320	3.520	2.17	1.310	147,200	-65	200	539.0	MS17985C1631 / NAS1343A2C31D	–	4211.M31
1	0.9970	0.9985	**3.3**	1.219	0.810	0.950	1.320	3.520	2.17	1.310	147,200	-65	200	561.0	MS17985C1633 / NAS1343A2C33D	–	4211.M33
1	0.9970	0.9985	**4.0**	1.219	0.810	0.950	1.320	3.520	2.17	1.310	147,200	-65	200	95.0	MS17985C1640 / NAS1343A2C40D	5315-01-553-7555	4211.M40
1	0.9970	0.9985	**4.5**	1.219	0.810	0.950	1.320	3.520	2.17	1.310	147,200	-65	200	679.0	MS17985C1645 / NAS1343A2C45D	5315-01-514-5097	4211.M45
1	0.9970	0.9985	**5.0**	1.219	0.810	0.950	1.320	3.520	2.17	1.310	147,200	-65	200	581.0	MS17985C1650 / NAS1343A2C50D	4920-01-581-1353	4211.M50
1	0.9970	0.9985	**5.5**	1.219	0.810	0.950	1.320	3.520	2.17	1.310	147,200	-65	200	779.0	MS17985C1655 / NAS1343A2C55D	–	4211.M55
1	0.9970	0.9985	**6.0**	1.219	0.810	0.950	1.320	3.520	2.17	1.310	147,200	-65	200	829.0	MS17985C1660 / NAS1343A2C60D	5315-01-586-8947	4211.M60

Compliance

For detailed compliance information please select the desired article number.