chanhvinh.com

Threaded Lifting Pins PLUS • self-locking, with rotatable shackle - RFID (INCH)

EH 2B353.



Product Description

Heavy-duty lifting element for quick and easy use, with moveable, rotatable shackle and locking stud to provide protection against unintentional unlocking. For lifting loads, the threaded lifting pin is inserted into a threaded hole. In contrast to a ringbolt, time-consuming screwing in and out is therefore unnecessary. The rotatable shackle will always align with the tensile direction of pull without the pin rotating. This prevents the lifting device from being turned out of the thread and the component can be lifted safely.
This threaded lifting pin is characterised by the following features:

- Suitable for standard inch threads
- Quick readiness for use thanks to tool-free installation without screwing process
- Visual installation control by clearly visible green indicator ring
- Easy assembly and disassembly due to lateral grip recess
- Rotatable, movable shackle for flexible applications
- New shackle with enlarged shackle opening for various lifting gear
- Ergonomic operation via lateral grip recess
- Thread segments without contact to the shackle safety bar
- Designed for increased lateral loads (F_2/F_3)
- Suitable for higher operating temperatures due to steel bearing
- Safety bar to prevent unintentional loosening
- Corrosion-protected versions, optionally in stainless steel for increased weather resistance
- Designed for high mechanical loads
- Integrated RFID chip for identification and process support

A green indicator ring enables clear visual inspection of the correct installation status. The lateral grip recess supports easy assembly and disassembly as well as safe operation of the mechanism. The redesigned shackle with enlarged shackle opening provides additional space for lifting gear and extends the range of applications. The design ensures that the thread segments do not come into contact with the shackle cross bar during operation, thereby guaranteeing reliable function.
The integrated RFID chip enables unique identification, e.g. for inspection, maintenance or logistics processes.
The design is suitable for increased lateral loads (F_2/F_3).
The use of a steel bearing makes the threaded lifting pin suitable for higher operating temperatures.
Thanks to identical nominal dimensions, the threaded lifting pin can be replaced directly with the threaded lifting pin PLUS.
This article group is available in heat-treated steel and in stainless steel. Both versions are corrosion-protected. The stainless steel version offers increased corrosion and weather resistance and is ideally suited for outdoor use. The high-strength, precipitation-hardened pin is designed for high mechanical loads.

Material

Pin part
- Heat-treated steel, tempered, manganese phosphated
- Stainless steel 1.4542, precipitation-hardened

Press button
- Aluminium, orange, anodised

Threaded element
- Stainless steel 1.4542, precipitation-hardened

Shackle
- Heat-treated steel, tempered, manganese phosphated
- Stainless steel 1.4571

Spring
- Stainless Steel

- stainless steel, painted green

Assembly

Threaded lifting pins can be mounted into a thread that is true to gauge.

Mounting:
1. Press in the button and hold it down.
2. Insert the threaded lifting pin.
3. Release the button (The button must be back in its original position. A clearly visible green marking on the press button indicates the correct position.).
4. Tighten the threaded lifting pin by hand, until it bears compleately on the bearing surface (mandatory).
5. It must be ensured that the threaded segments are engaged in the mounting thread.

Dismantling:
1. Unscrew the threaded lifting pin approx. a quarter of a turn anticlockwise.
2. Press in the button and hold it down.
3. Remove the threaded lifting pin.
4. Release the button.

Operation

Each lifting pin is supplied with a short instruction manual.

chanhvinh.com

This document and a detailed instruction manual are also available for download as PDF files.

More information

Notes

- This product is manufactured in INCH dimensions.

Further products

- Threaded Lifting Pins PLUS, self-locking
- Threaded Lifting Pins PLUS, self-locking, with rotatable shackle - RFID

Drawing

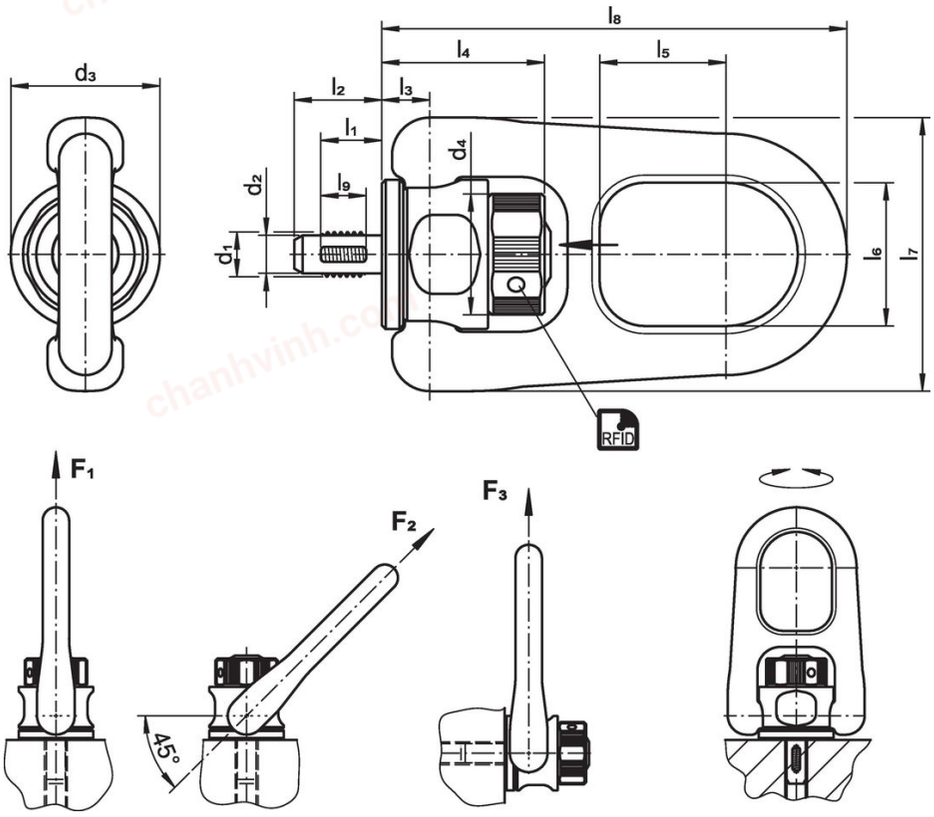

Order information

Dimensions [in]													Load capacity according to DIN EN 13155 [lbf]			Locating thread	Tightening torque			Art. No.
d_1	l_1	d_2 -0.003	d_3	d_4	l_2	l_3	l_4	l_5	l_6	l_7	l_8	l_9	F_1	F_2	F_3		max. [°F]	max. [lbf ft]		
Heat-treated steel																				
1/2-13	**0.636**	0.416	0.787	1.299	0.910	0.500	1.697	2.067	1.496	2.839	4.850	0.472	1528	1169	1169	1/2-13	482	1.48	28.62 oz	2B353.4012
3/4-10	**0.826**	0.640	1.378	1.969	1.142	0.827	2.567	2.539	2.539	4.344	7.972	0.669	3619	2944	2697	3/4-10	482	2.21	5.90 lb	2B353.4020
1-8	**1.023**	0.863	1.378	1.969	1.378	0.827	2.567	2.539	2.539	4.344	8.209	0.866	5395	4046	2810	1-8	482	2.21	6.00 lb	2B353.4024
Stainless steel																				
1/2-13	**0.636**	0.416	0.787	1.299	0.910	0.500	1.697	2.067	1.496	2.839	4.850	0.472	1528	1169	1169	1/2-13	482	1.48	29.24 oz	2B353.5012
3/4-10	**0.826**	0.640	1.378	1.969	1.142	0.827	2.567	2.539	2.539	4.344	7.972	0.669	3619	2944	2697	3/4-10	482	2.21	6.00 lb	2B353.5020
1-8	**1.023**	0.863	1.378	1.969	1.378	0.827	2.567	2.539	2.539	4.344	8.209	0.866	5395	4046	2810	1-8	482	2.21	6.00 lb	2B353.5024

chanhvinh.com

Application example



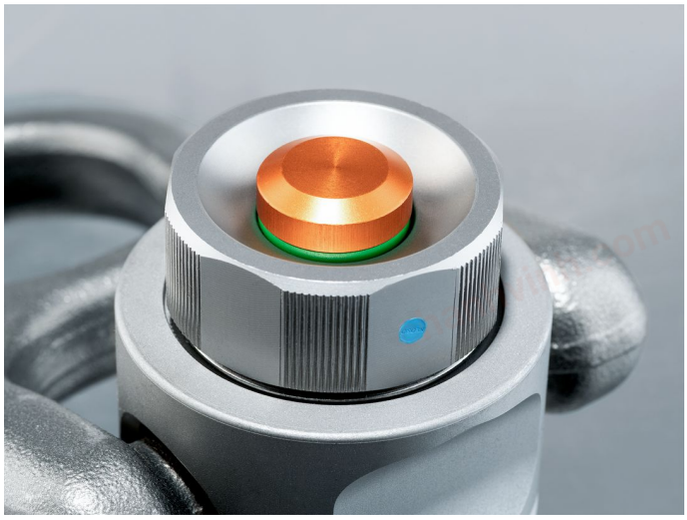

chanhvinh.com

Information on the load capacities

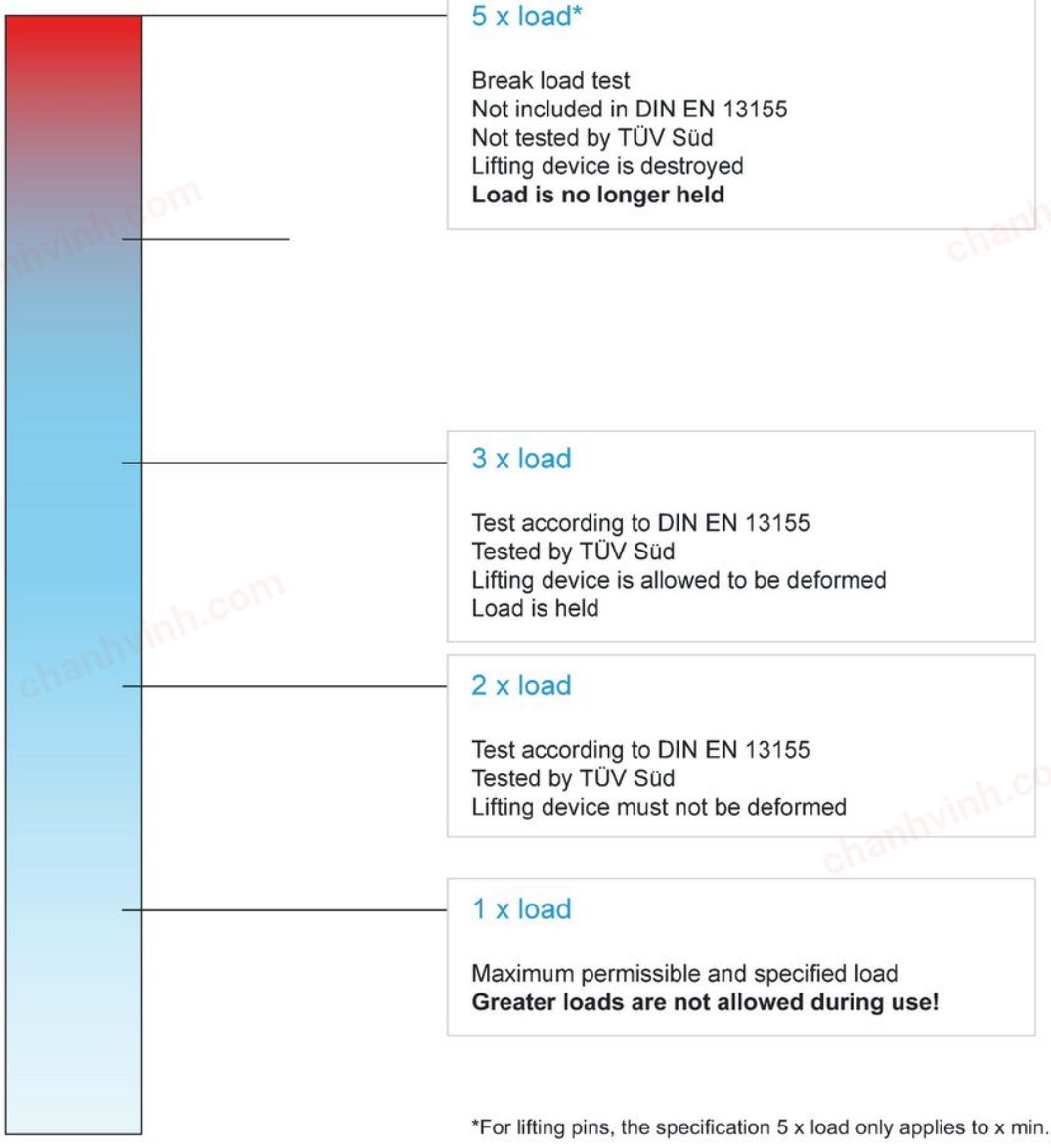

*For lifting pins, the specification 5 x load only applies to x min.

chanhvinh.com

Compliance

RoHS-compliant
Contains lead – Compliant with Exemption 6(b)-II.

Contains SVHC substances >0,1% w/w
Contains lead - SVHC list [REACH] as of 04.02.2026.

SCIP-code
N/A

Contains Proposition 65 substances



Nickel can cause cancer from exposure. / Lead can lead to cancer, developmental disorders, and reproductive damage in men and to reproductive damage in women from exposure.
https://www.P65Warnings.ca.gov/

Free from Conflict Minerals
This product does not contain any substances designated as "conflict minerals" such as tantalum, tin, gold or tungsten from the Democratic Republic of Congo or adjacent countries.

POP-compliant
Contains no persistent organic pollutants – Stockholm Convention [POP] as of September 2025.

PFAS-compliant
Contains no per- and polyfluoroalkyl substances (PFAS).

TSCA-compliant
Agent concentration in this product does not exceed the specified threshold.