chanhvinh.com

Threaded Lifting Pins PLUS • self-locking - INCH

EH 2B352.



Product Description

Heavy-duty lifting element for quick and easy use, with moveable shackle and locking stud to provide protection against unintentional unlocking. For lifting loads, the threaded lifting pin is inserted into a threaded hole. In contrast to a ringbolt, time-consuming screwing in and out is therefore unnecessary.
A circumferential green indicator ring enables clear visual inspection of the correct installation status. The actuation area with grip recess allows safe and ergonomic pressing of the button while ensuring unrestricted visibility of the indicator ring. The design ensures that the thread segments do not come into contact with the shackle cross bar during operation, thereby guaranteeing reliable function.
Thanks to identical nominal dimensions, the threaded lifting pin can be replaced directly with the threaded lifting pin PLUS.
This article group is available in heat-treated steel and in stainless steel. Both versions are corrosion-protected. The stainless steel version offers increased corrosion and weather resistance and is ideally suited for outdoor use. The high-strength, precipitation-hardened pin is designed for high mechanical loads.
This threaded lifting pin is characterised by the following features:

- Suitable for standard inch threads.
- Quick readiness for use thanks to tool-free installation without screwing process
- Visual installation control by clearly visible green indicator ring
- Movable shackle for flexible applications
- Ergonomic operation thanks to the grip recess, allowing comfortable actuation of the push button.
- Safety bar to prevent unintentional loosening
- Corrosion-protected versions, optionally in stainless steel for increased weather resistance
- Designed for high mechanical loads

Material

Pin part

- Heat-treated steel, tempered, manganese phosphated
- Stainless steel 1.4542, precipitation-hardened

Press button

- Aluminium, orange, anodised

Threaded element

- Stainless steel 1.4542, precipitation-hardened

Shackle

- Heat-treated steel, tempered, manganese phosphated
- Stainless steel 1.4571

Spring

- Stainless Steel

- stainless steel, painted green

Assembly

Threaded lifting pins can be mounted into a thread that is true to gauge.

Mounting:

1. Press in the button and hold it down.
2. Insert the threaded lifting pin.
3. Release the button (The button must be back in its original position. A clearly visible green marking on the press button indicates the correct position.).
4. Tighten the threaded lifting pin by hand, until it bears compleately on the bearing surface (mandatory).
5. It must be ensured that the threaded segments are engaged in the mounting thread.

Dismantling:

1. Unscrew the threaded lifting pin approx. a quarter of a turn anticlockwise.
2. Press in the button and hold it down.
3. Remove the threaded lifting pin.
4. Release the button.

Operation

Each lifting pin is supplied with a short instruction manual.
This document and a detailed instruction manual are also available for download as PDF files.

More information

Notes

When loads are picked up with more than one threaded lifting pin (load directions F_2 and F_3), we recommended that you use the rotating version EH 22353./EH 2B353. to ensure use that is in line with application requirements.

- This product is manufactured in INCH dimensions.

chanhvinh.com

Further products

- Threaded Lifting Pins PLUS, self-locking
- Threaded Lifting Pins PLUS, self-locking, with rotatable shackle - RFID

Drawing

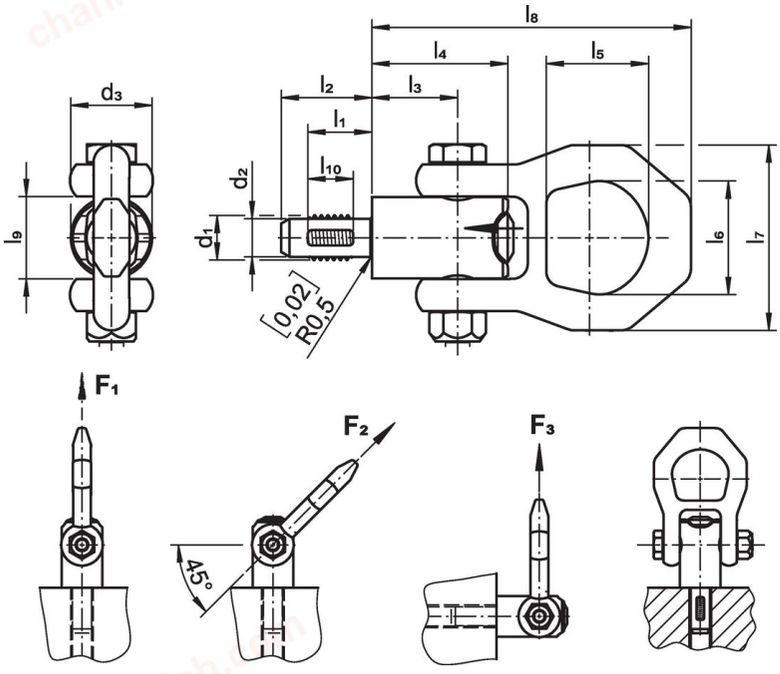

Order information

Dimensions													Load capacity according to DIN EN 13155			Locating thread			Art. No.
d_1	l_1	d_2 -0.003	d_3	l_2	l_3	l_4	l_5	l_6	l_7	l_8	l_9	l_{10}	F_1	F_2	F_3		max.		
[in]													[lbf]				[°F]		
Heat-treated steel																			
1/2-13	**0.669**	0.416	0.846	0.945	0.894	1.417	1.063	1.181	1.929	3.325	0.846	0.472	1528	764	607	1/2-13	482	9.63 oz	2B352.4012
3/4-10	**0.866**	0.640	1.181	1.181	1.160	1.890	1.283	1.417	2.205	4.210	1.181	0.669	3619	1865	1551	3/4-10	482	19.71 oz	2B352.4020
1-8	**1.063**	0.863	1.417	1.417	1.378	2.205	1.992	1.961	3.228	5.709	1.417	0.866	6676	3754	2742	1-8	482	2.80 lb	2B352.4024
Stainless steel																			
1/2-13	**0.669**	0.416	0.846	0.945	0.894	1.417	1.063	1.181	1.929	3.325	0.846	0.472	1528	764	607	1/2-13	482	9.94 oz	2B352.5012
3/4-10	**0.866**	0.640	1.181	1.181	1.160	1.890	1.283	1.417	2.205	4.210	1.181	0.669	3619	1865	1551	3/4-10	482	19.59 oz	2B352.5020
1-8	**1.063**	0.863	1.417	1.417	1.378	2.205	1.992	1.961	3.228	5.709	1.417	0.866	6676	3754	2742	1-8	482	2.90 lb	2B352.5024

Application example

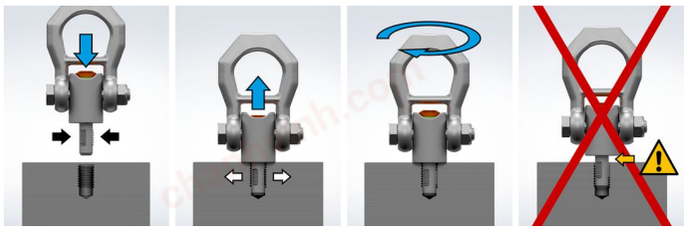

chanhvinh.com

Information on the load capacities



5 x load*

Break load test
Not included in DIN EN 13155
Not tested by TÜV Süd
Lifting device is destroyed
Load is no longer held

3 x load

Test according to DIN EN 13155
Tested by TÜV Süd
Lifting device is allowed to be deformed
Load is held

2 x load

Test according to DIN EN 13155
Tested by TÜV Süd
Lifting device must not be deformed

1 x load

Maximum permissible and specified load
Greater loads are not allowed during use!

*For lifting pins, the specification 5 x load only applies to x min.

chanhvinh.com

Compliance

RoHS-compliant
Contains lead – Compliant with Exemption 6(b)-II.

Contains SVHC substances >0,1% w/w
Contains lead - SVHC list [REACH] as of 04.02.2026.

SCIP-code
N/A

Contains Proposition 65 substances


Nickel can cause cancer from exposure. / Lead can lead to cancer, developmental disorders, and reproductive damage in men and to reproductive damage in women from exposure.
https://www.P65Warnings.ca.gov/

Free from Conflict Minerals
This product does not contain any substances designated as "conflict minerals" such as tantalum, tin, gold or tungsten from the Democratic Republic of Congo or adjacent countries.

POP-compliant
Contains no persistent organic pollutants – Stockholm Convention [POP] as of September 2025.

PFAS-compliant
Contains no per- and polyfluoroalkyl substances (PFAS).

TSCA-compliant
Agent concentration in this product does not exceed the specified threshold.