chanhvinh.com

Lateral Plungers • smooth, with seal, with female thread - INCH
EH 2B150.



Product Description

To be used for positioning and applying pressure, e.g. during painting and sandblasting.
Sealed against chips and dirt.

Material

Seal
- CR

Body
- Aluminium Al

Threaded washer
- Steel, blackened

Spring
- Stainless steel
- Steel, blackened
- Steel, zinc-plated by galvanization

Assembly

Formula for calculating the center distance for the mounting hole:
l_0 = z/2 + w + x,
l_0 = center distance,
y = workpiece height,
w = workpiece length,
x = stroke,
z = stop diameter
Calculation dimension x for workpieces:
$x = d_2/2 - s$
Installation by pressing in.

Characteristic

Version light spring load = spring from stainless steel
Version standard spring load = spring from steel, blackened
Version heavy spring load = spring from steel, zinc-plated by galvanization

More information

Notes

Individual set screws can be screwed in the plate with threaded hole.

Further products

- Eccentric Mounting Bushings, for lateral plungers, smooth - INCH

Drawing

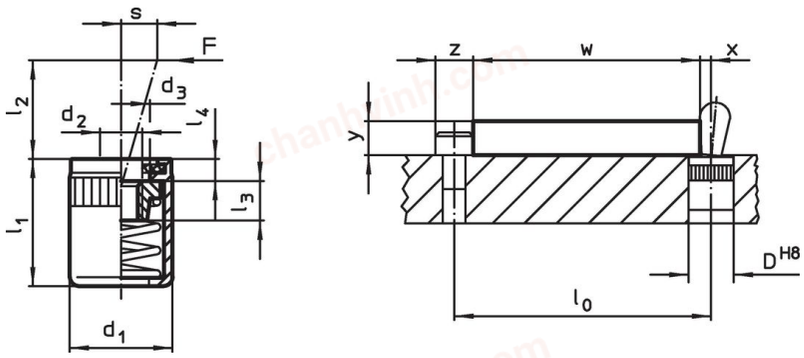

Order information

Dimensions		Spring load	Dimensions					Stroke	Location hole			Art. No.
d_1	d_2	F max. [1] ~	d_3 +0.008	l_1 -0.08	l_2	l_3	l_4	s	D H8	max.		
[in]		[lb]	[mm]	[in]				[in]	[in]	[°F]	[oz]	
Light spring load												
7/16	**#8-32**	**4.5**	0.248	0.430	0.157	0.177	0.063	0.063	7/16	230	0.08	2B150.1120
7/16	**#8-32**	**9.0**	0.248	0.430	0.295	0.177	0.063	0.079	7/16	230	0.09	2B150.1125
5/8	**1/4-20**	**22.5**	0.401	0.709	0.453	0.295	0.079	0.126	5/8	230	0.37	2B150.1140

[1] statistical average value

chanhvinh.com

Dimensions d_1 [in]	Dimensions d_2	Spring load F max. [1] ~ [lb]	Dimensions d_3 +0.008 [mm]	Dimensions l_1 -0.08 [in]	Dimensions l_2 [in]	Dimensions l_3 [in]	Dimensions l_4 [in]	Stroke s [in]	Location hole D H8 [in]	max. [°F]	[oz]	Art. No.
Standard spring load												
7/16	**#8-32**	**11.2**	0.248	0.430	0.157	0.177	0.063	0.063	7/16	230	0.09	2B150.1121
7/16	**#8-32**	**16.9**	0.248	0.430	0.295	0.177	0.063	0.079	7/16	230	0.09	2B150.1126
5/8	**1/4-20**	**34.0**	0.401	0.709	0.453	0.295	0.079	0.126	5/8	230	0.31	2B150.1141
Heavy spring load												
7/16	**#8-32**	**22.5**	0.248	0.430	0.157	0.177	0.063	0.063	7/16	230	0.10	2B150.1122
7/16	**#8-32**	**34.0**	0.248	0.430	0.295	0.177	0.063	0.079	7/16	230	0.11	2B150.1127
5/8	**1/4-20**	**45.0**	0.401	0.709	0.453	0.295	0.079	0.126	5/8	230	0.33	2B150.1142

[1] statistical average value

Accessories

	Dimensions d_1 [in]	[oz]	Art. No.
assembly tool			
	**7/16**	1.749	22150.0831
	5/8	3.749	22150.0833

Compliance

For detailed compliance information please select the desired article number.