chanhvinh.com

Spring Plungers • smooth, with collar and ball, self-clamping – INCH
EH 2B080.



Product Description

Spring plungers can be used for locking as well as for applying or ejecting pressure.
The spring plungers compensate tolerances of up to 0.008" (inches) of the locating hole by self-clamping. This saves costs in the machining of the locating hole.

Material

Body
- Thermoplastic POM, black

Ball
- Stainless steel, hardened

Spring
- Stainless steel

Assembly

Thanks to the flexible design of the body, a direct manual mounting and a secure overhead installation is possible.

More information

Notes

Customized design on request.
Spring plungers are specially tested for spring range and spring load.

References

Calculation of indexing resistance, please refer to application example

Further products

- Spring Plungers, smooth, with collar and ball, self-clamping
- Locators, bolt-on, for spring plungers
- Locators, smooth, for spring plungers

Drawing

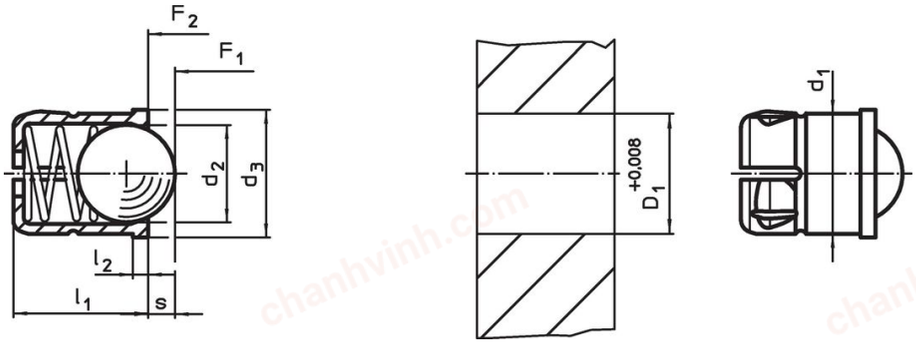

Order information

Dimensions					Stroke	Spring load[1]				Location hole		Art. No.
d_1 +0.004	d_2	d_3	l_1 ±0.01	l_2	s	F_1 ~	F_2 ~	min.	max.	D_1 +0.008		
[in]					[in]	[lb]		[°F]		[in]	[oz]	
3/16	0.157	0.220	0.236	0.039	0.039	1.3	2.1	-22	122	3/16	0.01	2B080.0050
1/4	0.197	0.276	0.276	0.039	0.059	1.4	2.8	-22	122	1/4	0.02	2B080.0060
5/16	0.256	0.335	0.354	0.039	0.075	1.9	4.5	-22	122	5/16	0.05	2B080.0080
3/8	0.315	0.433	0.531	0.059	0.091	2.7	5.0	-22	122	3/8	0.10	2B080.0090
1/2	0.394	0.551	0.630	0.059	0.126	3.1	5.6	-22	122	1/2	0.21	2B080.0120

[1] statistical average value

chanhvinh.com

Application example

CALCULATION OF THE INDEXING RESISTANCE

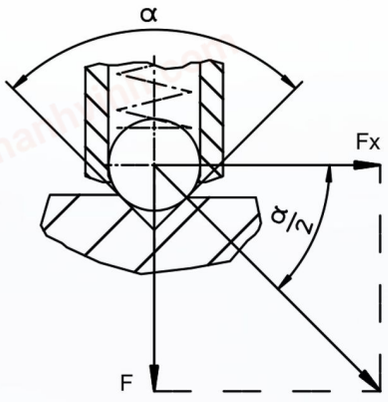

Sample calculation for:
α = 60°, Fx = 1,732 x F
α = 90°, Fx = F
α = 120°, Fx = 0,577 x F

$$Fx = \frac{F}{\tan \frac{\alpha}{2}}$$

Compliance

RoHS-compliant
Compliant with Directive 2011/65/EU [RoHS].

Does not contain SVHC substances
No SVHC substances with more than 0.1% w/w contained - SVHC list [REACH] as of 04.02.2026.

SCIP-code
N/A

Contains Proposition 65 substances



Nickel can cause cancer from exposure.
https://www.P65Warnings.ca.gov/

Free from Conflict Minerals
This product does not contain any substances designated as "conflict minerals" such as tantalum, tin, gold or tungsten from the Democratic Republic of Congo or adjacent countries.

POP-compliant
Contains no persistent organic pollutants – Stockholm Convention [POP] as of September 2025.

PFAS-compliant
Contains no per- and polyfluoroalkyl substances (PFAS).

TSCA-compliant
Agent concentration in this product does not exceed the specified threshold.