chanhvinh.com

Spring Plungers • with ball and slot - INCH

EH 2B050.



Product Description

To be used for positioning, indexing, locking, latching as well as for other similar pressure applications.
Spring plungers can be used for locking as well as for applying or ejecting pressure.

Material

Body
- Free cutting steel, blackened
- Stainless steel 1.4305 (ASTM-A-582)

Ball
- Stainless steel, hardened

Spring
- Stainless steel

More information

Notes

Customized design on request.
Spring plungers are specially tested for spring range and spring load.
- This product is manufactured in INCH dimensions.

References

A conversion table can be found in the technical data following these product information pages.
Thread lock: polyamide spot coating (for details please refer to the technical appendix).
Calculation of indexing resistance, please refer to application example

Further products

- Spring Plungers, with ball and slot
- Locators, bolt-on, for spring plungers
- Locators, smooth, for spring plungers

Drawing

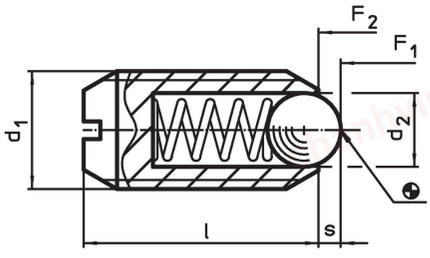

Order information

Dimensions						Stroke	Spring load[1]					Art. No.
d_1		Thread	d_2	l		s	F_1 ~	F_2 ~	min.	max.		
	[in]		[in]			[in]	[lb]		[°F]		[oz]	
free cutting steel, light spring load, Without thread lock												
#10-32		0.190	2A-UNF	3/32	33/64	0.025	0.9	1.5	-22	482	0.05	2B050.0010
1/4-20	1/4	0.250	2A-UNC	1/8	17/32	0.035	2.1	4.0	-22	482	0.07	2B050.0012
5/16-18	5/16	0.313	2A-UNC	5/32	37/64	0.040	2.0	4.6	-22	482	0.11	2B050.0016
3/8-16	3/8	0.375	2A-UNC	3/16	5/8	0.048	2.5	5.0	-22	482	0.19	2B050.0018
1/2-13	1/2	0.500	2A-UNC	9/32	3/4	0.072	3.0	6.0	-22	482	0.40	2B050.0020
5/8-11	5/8	0.625	2A-UNC	3/8	63/64	0.096	4.5	9.0	-22	482	0.79	2B050.0022
free cutting steel, light spring load, With thread lock												
#10-32		0.190	2A-UNF	3/32	33/64	0.025	0.9	1.5	-22	194	0.04	2B050.0210
1/4-20	1/4	0.250	2A-UNC	1/8	17/32	0.035	2.1	4.0	-22	194	0.07	2B050.0212
5/16-18	5/16	0.313	2A-UNC	5/32	37/64	0.040	2.0	4.6	-22	194	0.12	2B050.0216
3/8-16	3/8	0.375	2A-UNC	3/16	5/8	0.048	2.5	5.0	-22	194	0.19	2B050.0218
1/2-13	1/2	0.500	2A-UNC	9/32	3/4	0.072	3.0	6.0	-22	194	0.40	2B050.0220
5/8-11	5/8	0.625	2A-UNC	3/8	63/64	0.096	4.5	9.0	-22	194	0.79	2B050.0222

[1] statistical average value

Dimensions					Stroke	Spring load[1]					Art. No.
d_1		Thread	d_2	l	s	F_1 ~	F_2 ~	min.	max.		
[in]			[in]		[in]	[lb]		[°F]		[oz]	
free cutting steel, standard spring load, Without thread lock											
#4-48	0.112	2A-UNF	1/16	3/16	0.020	0.1	0.5	-22	482	0.00	2B050.0031
#5-40	0.125	2A-UNC	1/16	1/4	0.020	0.3	0.8	-22	482	0.01	2B050.0032
#6-32	0.138	2A-UNC	5/64	5/16	0.023	0.5	1.0	-22	482	0.01	2B050.0033
#6-40	0.138	2A-UNF	5/64	5/16	0.023	0.5	1.0	-22	482	0.01	2B050.0035
#8-32	0.164	2A-UNC	3/32	11/32	0.025	0.8	1.3	-22	482	0.02	2B050.0036
#8-36	0.164	2A-UNF	3/32	11/32	0.025	0.8	1.3	-22	482	0.02	2B050.0038
#10-32	0.190	2A-UNF	3/32	33/64	0.025	2.0	3.1	-22	482	0.05	2B050.0040
1/4-20	1/4 0.250	2A-UNC	1/8	17/32	0.035	3.8	6.8	-22	482	0.06	2B050.0042
5/16-18	5/16 0.313	2A-UNC	5/32	37/64	0.040	4.0	8.4	-22	482	0.12	2B050.0046
3/8-16	3/8 0.375	2A-UNC	3/16	5/8	0.048	5.0	10.3	-22	482	0.19	2B050.0048
1/2-13	1/2 0.500	2A-UNC	9/32	3/4	0.072	6.0	12.0	-22	482	0.39	2B050.0050
5/8-11	5/8 0.625	2A-UNC	3/8	63/64	0.096	9.0	18.0	-22	482	0.81	2B050.0052
free cutting steel, standard spring load, With thread lock											
#4-48	0.112	2A-UNF	1/16	3/16	0.020	0.1	0.5	-22	194	0.00	2B050.0231
#5-40	0.125	2A-UNC	1/16	1/4	0.020	0.3	0.8	-22	194	0.01	2B050.0232
#6-32	0.138	2A-UNC	5/64	5/16	0.023	0.5	1.0	-22	194	0.01	2B050.0233
#6-40	0.138	2A-UNF	5/64	5/16	0.023	0.5	1.0	-22	194	0.02	2B050.0235
#8-32	0.164	2A-UNC	3/32	11/32	0.025	0.8	1.3	-22	194	0.03	2B050.0236
#8-36	0.164	2A-UNF	3/32	11/32	0.025	0.8	1.3	-22	194	0.03	2B050.0238
#10-32	0.190	2A-UNF	3/32	33/64	0.025	2.0	3.1	-22	194	0.04	2B050.0240
1/4-20	1/4 0.250	2A-UNC	1/8	17/32	0.035	3.8	6.8	-22	194	0.07	2B050.0242
5/16-18	5/16 0.313	2A-UNC	5/32	37/64	0.040	4.0	8.4	-22	194	0.11	2B050.0246
3/8-16	3/8 0.375	2A-UNC	3/16	5/8	0.048	5.0	10.3	-22	194	0.19	2B050.0248
1/2-13	1/2 0.500	2A-UNC	9/32	3/4	0.072	6.0	12.0	-22	194	0.38	2B050.0250
5/8-11	5/8 0.625	2A-UNC	3/8	63/64	0.096	9.0	18.0	-22	194	0.80	2B050.0252
free cutting steel, heavy spring load, Without thread lock											
#10-32	0.190	2A-UNF	3/32	33/64	0.025	3.3	4.8	-22	482	0.04	2B050.0070
1/4-20	1/4 0.250	2A-UNC	1/8	17/32	0.035	5.6	8.6	-22	482	0.06	2B050.0072
5/16-18	5/16 0.313	2A-UNC	5/32	37/64	0.040	6.0	11.1	-22	482	0.11	2B050.0076
3/8-16	3/8 0.375	2A-UNC	3/16	5/8	0.048	7.5	15.1	-22	482	0.20	2B050.0078
1/2-13	1/2 0.500	2A-UNC	9/32	3/4	0.072	6.0	24.0	-22	482	0.41	2B050.0080
5/8-11	5/8 0.625	2A-UNC	3/8	63/64	0.096	7.0	40.0	-22	482	0.83	2B050.0082
free cutting steel, heavy spring load, With thread lock											
#10-32	0.190	2A-UNF	3/32	33/64	0.025	3.3	4.8	-22	194	0.04	2B050.0270
1/4-20	1/4 0.250	2A-UNC	1/8	17/32	0.035	5.6	8.6	-22	194	0.06	2B050.0272
5/16-18	5/16 0.313	2A-UNC	5/32	37/64	0.040	6.0	11.1	-22	194	0.11	2B050.0276
3/8-16	3/8 0.375	2A-UNC	3/16	5/8	0.048	7.5	15.1	-22	194	0.20	2B050.0278
1/2-13	1/2 0.500	2A-UNC	9/32	3/4	0.072	6.0	24.0	-22	194	0.40	2B050.0280
5/8-11	5/8 0.625	2A-UNC	3/8	63/64	0.096	7.0	40.0	-22	194	0.82	2B050.0282
stainless steel, light spring load, Without thread lock											
#10-32	0.190	2A-UNF	3/32	33/64	0.025	0.9	1.5	-22	482	0.04	2B050.0110
1/4-20	1/4 0.250	2A-UNC	1/8	17/32	0.035	2.1	4.0	-22	482	0.05	2B050.0112
5/16-18	5/16 0.313	2A-UNC	5/32	37/64	0.040	2.0	4.6	-22	482	0.12	2B050.0116
3/8-16	3/8 0.375	2A-UNC	3/16	5/8	0.048	2.5	5.0	-22	482	0.19	2B050.0118
1/2-13	1/2 0.500	2A-UNC	9/32	3/4	0.072	3.0	6.0	-22	482	0.40	2B050.0120
5/8-11	5/8 0.625	2A-UNC	3/8	63/64	0.096	4.5	9.0	-22	482	0.79	2B050.0122
stainless steel, light spring load, With thread lock											
#10-32	0.190	2A-UNF	3/32	33/64	0.025	0.9	1.5	-22	194	0.05	2B050.0310
1/4-20	1/4 0.250	2A-UNC	1/8	17/32	0.035	2.1	4.0	-22	194	0.07	2B050.0312
5/16-18	5/16 0.313	2A-UNC	5/32	37/64	0.040	2.0	4.6	-22	194	0.12	2B050.0316
3/8-16	3/8 0.375	2A-UNC	3/16	5/8	0.048	2.5	5.0	-22	194	0.19	2B050.0318
1/2-13	1/2 0.500	2A-UNC	9/32	3/4	0.072	3.0	6.0	-22	194	0.40	2B050.0320
5/8-11	5/8 0.625	2A-UNC	3/8	63/64	0.096	4.5	9.0	-22	194	0.79	2B050.0322
stainless steel, standard spring load, Without thread lock											
#4-48	0.112	2A-UNF	1/16	3/16	0.020	0.1	0.5	-22	482	0.00	2B050.0131
#5-40	0.125	2A-UNC	1/16	1/4	0.020	0.3	0.8	-22	482	0.01	2B050.0132
#6-32	0.138	2A-UNC	5/64	5/16	0.023	0.5	1.0	-22	482	0.01	2B050.0133
#6-40	0.138	2A-UNF	5/64	5/16	0.023	0.5	1.0	-22	482	0.01	2B050.0135

[1] statistical average value

chanhvinh.com

Dimensions						Stroke	Spring load[1]					Art. No.
d_1			Thread	d_2	l	s	F_1 ~	F_2 ~	min.	max.		
	[in]			[in]		[in]	[lb]		[°F]		[oz]	
#8-32		0.164	2A-UNC	3/32	11/32	0.025	0.8	1.3	-22	482	0.02	2B050.0136
#8-36		0.164	2A-UNF	3/32	11/32	0.025	0.8	1.3	-22	482	0.02	2B050.0138
#10-32		0.190	2A-UNF	3/32	33/64	0.025	2.0	3.1	-22	482	0.04	2B050.0140
1/4-20	1/4	0.250	2A-UNC	1/8	17/32	0.035	3.8	6.8	-22	482	0.06	2B050.0142
5/16-18	5/16	0.313	2A-UNC	5/32	37/64	0.040	4.0	8.4	-22	482	0.12	2B050.0146
3/8-16	3/8	0.375	2A-UNC	3/16	5/8	0.048	5.0	10.3	-22	482	0.20	2B050.0148
1/2-13	1/2	0.500	2A-UNC	9/32	3/4	0.072	6.0	12.0	-22	482	0.38	2B050.0150
5/8-11	5/8	0.625	2A-UNC	3/8	63/64	0.096	9.0	18.0	-22	482	0.81	2B050.0152
stainless steel, standard spring load, With thread lock												
#4-48		0.112	2A-UNF	1/16	3/16	0.020	0.1	0.5	-22	194	0.00	2B050.0331
#5-40		0.125	2A-UNC	1/16	1/4	0.020	0.3	0.8	-22	194	0.02	2B050.0332
#6-32		0.138	2A-UNC	5/64	5/16	0.023	0.5	1.0	-22	194	0.19	2B050.0333
#6-40		0.138	2A-UNF	5/64	5/16	0.023	0.5	1.0	-22	194	0.02	2B050.0335
#8-32		0.164	2A-UNC	3/32	11/32	0.025	0.8	1.3	-22	194	0.02	2B050.0336
#8-36		0.164	2A-UNF	3/32	11/32	0.025	0.8	1.3	-22	194	0.03	2B050.0338
#10-32		0.190	2A-UNF	3/32	33/64	0.025	2.0	3.1	-22	194	0.04	2B050.0340
1/4-20	1/4	0.250	2A-UNC	1/8	17/32	0.035	3.8	6.8	-22	194	0.07	2B050.0342
5/16-18	5/16	0.313	2A-UNC	5/32	37/64	0.040	4.0	8.4	-22	194	0.12	2B050.0346
3/8-16	3/8	0.375	2A-UNC	3/16	5/8	0.048	5.0	10.3	-22	194	0.19	2B050.0348
1/2-13	1/2	0.500	2A-UNC	9/32	3/4	0.072	6.0	12.0	-22	194	0.41	2B050.0350
5/8-11	5/8	0.625	2A-UNC	3/8	63/64	0.096	9.0	18.0	-22	194	0.81	2B050.0352
stainless steel, heavy spring load, Without thread lock												
#10-32		0.190	2A-UNF	3/32	33/64	0.025	3.3	4.8	-22	482	0.05	2B050.0170
1/4-20	1/4	0.250	2A-UNC	1/8	17/32	0.035	5.6	8.6	-22	482	0.07	2B050.0172
5/16-18	5/16	0.313	2A-UNC	5/32	37/64	0.040	6.0	11.1	-22	482	0.12	2B050.0176
3/8-16	3/8	0.375	2A-UNC	3/16	5/8	0.048	7.5	15.1	-22	482	0.20	2B050.0178
1/2-13	1/2	0.500	2A-UNC	9/32	3/4	0.072	6.0	24.0	-22	482	0.40	2B050.0180
5/8-11	5/8	0.625	2A-UNC	3/8	63/64	0.096	7.0	40.0	-22	482	0.83	2B050.0182
stainless steel, heavy spring load, With thread lock												
#10-32		0.190	2A-UNF	3/32	33/64	0.025	3.3	4.8	-22	194	0.05	2B050.0370
1/4-20	1/4	0.250	2A-UNC	1/8	17/32	0.035	5.6	8.6	-22	194	0.07	2B050.0372
5/16-18	5/16	0.313	2A-UNC	5/32	37/64	0.040	6.0	11.1	-22	194	0.11	2B050.0376
3/8-16	3/8	0.375	2A-UNC	3/16	5/8	0.048	7.5	15.1	-22	194	0.20	2B050.0378
1/2-13	1/2	0.500	2A-UNC	9/32	3/4	0.072	6.0	24.0	-22	194	0.41	2B050.0380
5/8-11	5/8	0.625	2A-UNC	3/8	63/64	0.096	7.0	40.0	-22	194	0.81	2B050.0382

[1] statistical average value

Application example

CALCULATION OF THE INDEXING RESISTANCE

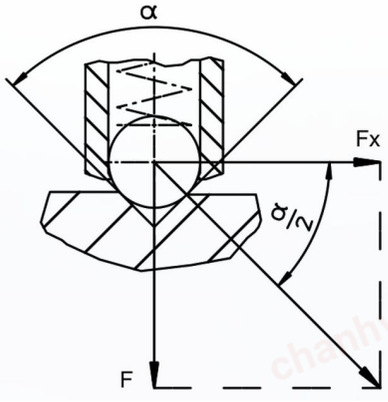

Sample calculation for:
α = 60°, Fx = 1,732 x F
α = 90°, Fx = F
α = 120°, Fx = 0,577 x F

$$Fx = \frac{F}{\tan \frac{\alpha}{2}}$$

chanhvinh.com

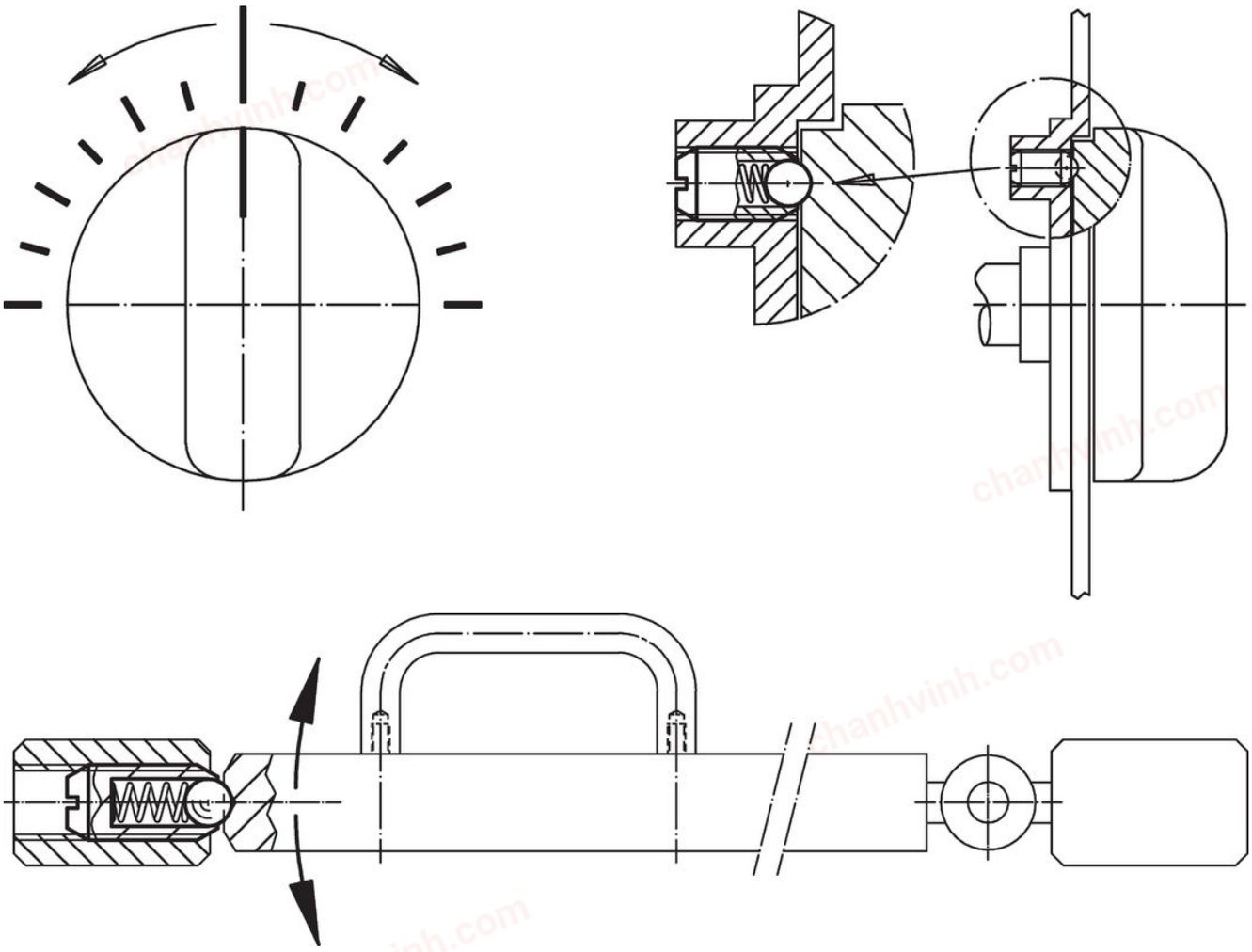

Compliance

For detailed compliance information please select the desired article number.