chanhvinh.com

Spring Plungers • with pin and internal hexagon - INCH

EH 2B030.



Product Description

To be used for positioning, indexing, locking, latching as well as for other similar pressure applications.
Spring plungers can be used for locking as well as for applying or ejecting pressure.

Material

Pin
- Free cutting steel, hardened, blackened
- Stainless Steel 1.4305 (ASTM-A-582), nitrided

Body
- Free cutting steel, blackened
- Stainless steel 1.4305 (ASTM-A-582)

Spring
- Stainless steel

More information

Notes

Customized design on request.
Spring plungers are specially tested for spring range and spring load.
- This product is manufactured in INCH dimensions.

References

A conversion table can be found in the technical data following these product information pages.
Thread lock: polyamide spot coating (for details please refer to the technical appendix).

Further products

- Spring Plungers, with pin and internal hexagon

Drawing

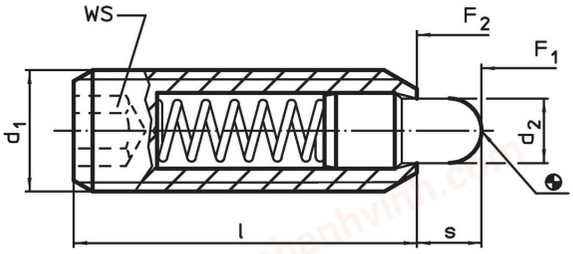

Order information

Dimensions						WS	Stroke	Spring load[1]					Art. No.
d_1		Thread	d_2	l		s	F_1 ~	F_2 ~	min.	max.		
	[in]		[in]		[in]	[in]	[lb]		[°F]		[oz]	
free cutting steel, standard spring load, Without thread lock												
#6-32		0.138	2A-UNC	0.046	17/32	1/16	0.063	0.5	1.5	-22	482	0.02	2B030.0033
#8-32		0.164	2A-UNC	0.070	5/8	5/64	0.094	0.8	2.3	-22	482	0.04	2B030.0036
#10-32		0.190	2A-UNF	0.093	3/4	3/32	0.125	1.4	2.7	-22	482	0.05	2B030.0040
1/4-20	1/4	0.250	2A-UNC	0.119	1	1/8	0.188	1.0	4.0	-22	482	0.12	2B030.0042
1/4-28	1/4	0.250	2A-UNF	0.119	1	1/8	0.188	1.0	4.0	-22	482	0.13	2B030.0044
5/16-18	5/16	0.313	2A-UNC	0.135	1	5/32	0.188	1.5	4.5	-22	482	0.19	2B030.0046
3/8-16	3/8	0.375	2A-UNC	0.186	1 1/8	3/16	0.188	2.7	7.2	-22	482	0.33	2B030.0048
1/2-13	1/2	0.500	2A-UNC	0.248	1 1/4	1/4	0.250	2.7	9.3	-22	482	0.64	2B030.0050
5/8-11	5/8	0.625	2A-UNC	0.310	1 1/2	5/16	0.313	3.5	10.6	-22	482	1.24	2B030.0052
3/4-10	3/4	0.750	2A-UNC	0.374	1 3/4	3/8	0.313	5.5	14.5	-22	482	2.17	2B030.0053
1-8	1	0.125	2A-UNC	0.499	2 13/32	3/8	0.500	4.0	31.0	-22	482	5.44	2B030.0054
free cutting steel, standard spring load, With thread lock													
#6-32		0.138	2A-UNC	0.046	17/32	1/16	0.063	0.5	1.5	-22	194	0.02	2B030.0233
#8-32		0.164	2A-UNC	0.070	5/8	5/64	0.094	0.8	2.3	-22	194	0.03	2B030.0236
#10-32		0.190	2A-UNF	0.093	3/4	3/32	0.125	1.4	2.7	-22	194	0.06	2B030.0240
1/4-20	1/4	0.250	2A-UNC	0.119	1	1/8	0.188	1.0	4.0	-22	194	0.12	2B030.0242
1/4-28	1/4	0.250	2A-UNF	0.119	1	1/8	0.188	1.0	4.0	-22	194	0.14	2B030.0244

[1] statistical average value

Dimensions						WS	Stroke s	Spring load[1]					Art. No.
d_1			Thread	d_2	l			F_1 ~	F_2 ~	min.	max.		
	[in]			[in]		[in]	[in]	[lb]		[°F]		[oz]	
5/16-18	5/16	0.313	2A-UNC	0.135	1	5/32	0.188	1.5	4.5	-22	194	0.20	2B030.0246
3/8-16	3/8	0.375	2A-UNC	0.186	1 1/8	3/16	0.188	2.7	7.2	-22	194	0.33	2B030.0248
1/2-13	1/2	0.500	2A-UNC	0.248	1 1/4	1/4	0.250	2.7	9.3	-22	194	0.64	2B030.0250
5/8-11	5/8	0.625	2A-UNC	0.310	1 1/2	5/16	0.313	3.5	10.6	-22	194	1.25	2B030.0252
3/4-10	3/4	0.750	2A-UNC	0.374	1 3/4	3/8	0.313	5.5	14.5	-22	194	2.17	2B030.0253
1-8	1	0.125	2A-UNC	0.499	2 13/32	3/8	0.500	4.0	31.0	-22	194	5.35	2B030.0254
free cutting steel, heavy spring load, Without thread lock													
#6-32		0.138	2A-UNC	0.046	17/32	1/16	0.063	1.5	3.4	-22	482	0.03	2B030.0063
#8-32		0.164	2A-UNC	0.070	5/8	5/64	0.094	2.6	6.6	-22	482	0.04	2B030.0066
#10-32		0.190	2A-UNF	0.093	3/4	3/32	0.125	3.2	9.0	-22	482	0.06	2B030.0070
1/4-20	1/4	0.250	2A-UNC	0.119	1	1/8	0.188	3.1	10.1	-22	482	0.12	2B030.0072
1/4-28	1/4	0.250	2A-UNF	0.119	1	1/8	0.188	3.1	10.1	-22	482	0.14	2B030.0074
5/16-18	5/16	0.313	2A-UNC	0.135	1	5/32	0.188	3.0	15.0	-22	482	0.21	2B030.0076
3/8-16	3/8	0.375	2A-UNC	0.186	1 1/8	3/16	0.188	5.5	12.7	-22	482	0.33	2B030.0078
1/2-13	1/2	0.500	2A-UNC	0.248	1 1/4	1/4	0.250	6.6	16.0	-22	482	0.64	2B030.0080
5/8-11	5/8	0.625	2A-UNC	0.310	1 1/2	5/16	0.313	10.5	22.2	-22	482	1.25	2B030.0082
3/4-10	3/4	0.750	2A-UNC	0.374	1 3/4	3/8	0.313	6.7	33.0	-22	482	2.12	2B030.0083
1-8	1	0.125	2A-UNC	0.499	2 13/32	3/8	0.500	16.0	60.0	-22	482	5.54	2B030.0084
free cutting steel, heavy spring load, With thread lock													
#6-32		0.138	2A-UNC	0.046	17/32	1/16	0.063	1.5	3.4	-22	194	0.02	2B030.0263
#8-32		0.164	2A-UNC	0.070	5/8	5/64	0.094	2.6	6.6	-22	194	0.03	2B030.0266
#10-32		0.190	2A-UNF	0.093	3/4	3/32	0.125	3.2	9.0	-22	194	0.07	2B030.0270
1/4-20	1/4	0.250	2A-UNC	0.119	1	1/8	0.188	3.1	10.1	-22	194	0.12	2B030.0272
1/4-28	1/4	0.250	2A-UNF	0.119	1	1/8	0.188	3.1	10.1	-22	194	0.14	2B030.0274
5/16-18	5/16	0.313	2A-UNC	0.135	1	5/32	0.188	3.0	15.0	-22	194	0.20	2B030.0276
3/8-16	3/8	0.375	2A-UNC	0.186	1 1/8	3/16	0.188	5.5	12.7	-22	194	0.33	2B030.0278
1/2-13	1/2	0.500	2A-UNC	0.248	1 1/4	1/4	0.250	6.6	16.0	-22	194	0.65	2B030.0280
5/8-11	5/8	0.625	2A-UNC	0.310	1 1/2	5/16	0.313	10.5	22.2	-22	194	1.25	2B030.0282
3/4-10	3/4	0.750	2A-UNC	0.374	1 3/4	3/8	0.313	6.7	33.0	-22	194	2.18	2B030.0283
1-8	1	0.125	2A-UNC	0.499	2 13/32	3/8	0.500	16.0	60.0	-22	194	5.50	2B030.0284
stainless steel, standard spring load, Without thread lock													
#6-32		0.138	2A-UNC	0.046	17/32	1/16	0.063	0.5	1.5	-22	482	0.02	2B030.0133
#8-32		0.164	2A-UNC	0.070	5/8	5/64	0.094	0.8	2.3	-22	482	0.03	2B030.0136
#10-32		0.190	2A-UNF	0.093	3/4	3/32	0.125	1.4	2.7	-22	482	0.06	2B030.0140
1/4-20	1/4	0.250	2A-UNC	0.119	1	1/8	0.188	1.0	4.0	-22	482	0.12	2B030.0142
1/4-28	1/4	0.250	2A-UNF	0.119	1	1/8	0.188	1.0	4.0	-22	482	0.14	2B030.0144
5/16-18	5/16	0.313	2A-UNC	0.135	1	5/32	0.188	1.5	4.5	-22	482	0.21	2B030.0146
3/8-16	3/8	0.375	2A-UNC	0.186	1 1/8	3/16	0.188	2.7	7.2	-22	482	0.33	2B030.0148
1/2-13	1/2	0.500	2A-UNC	0.248	1 1/4	1/4	0.250	2.7	9.3	-22	482	0.65	2B030.0150
5/8-11	5/8	0.625	2A-UNC	0.310	1 1/2	5/16	0.313	3.5	10.6	-22	482	1.25	2B030.0152
3/4-10	3/4	0.750	2A-UNC	0.374	1 3/4	3/8	0.313	5.5	14.5	-22	482	2.18	2B030.0153
1-8	1	0.125	2A-UNC	0.499	2 13/32	3/8	0.500	4.0	31.0	-22	482	5.47	2B030.0154
stainless steel, standard spring load, With thread lock													
#6-32		0.138	2A-UNC	0.046	17/32	1/16	0.063	0.5	1.5	-22	194	0.02	2B030.0333
#8-32		0.164	2A-UNC	0.070	5/8	5/64	0.094	0.8	2.3	-22	194	0.04	2B030.0336
#10-32		0.190	2A-UNF	0.093	3/4	3/32	0.125	1.4	2.7	-22	194	0.06	2B030.0340
1/4-20	1/4	0.250	2A-UNC	0.119	1	1/8	0.188	1.0	4.0	-22	194	0.12	2B030.0342
1/4-28	1/4	0.250	2A-UNF	0.119	1	1/8	0.188	1.0	4.0	-22	194	0.14	2B030.0344
5/16-18	5/16	0.313	2A-UNC	0.135	1	5/32	0.188	1.5	4.5	-22	194	0.21	2B030.0346
3/8-16	3/8	0.375	2A-UNC	0.186	1 1/8	3/16	0.188	2.7	7.2	-22	194	0.34	2B030.0348
1/2-13	1/2	0.500	2A-UNC	0.248	1 1/4	1/4	0.250	2.7	9.3	-22	194	0.65	2B030.0350
5/8-11	5/8	0.625	2A-UNC	0.310	1 1/2	5/16	0.313	3.5	10.6	-22	194	1.25	2B030.0352
3/4-10	3/4	0.750	2A-UNC	0.374	1 3/4	3/8	0.313	5.5	14.5	-22	194	2.19	2B030.0353
1-8	1	0.125	2A-UNC	0.499	2 13/32	3/8	0.500	4.0	31.0	-22	194	5.46	2B030.0354
stainless steel, heavy spring load, Without thread lock													
#6-32		0.138	2A-UNC	0.046	17/32	1/16	0.063	1.5	3.4	-22	482	0.02	2B030.0163
#8-32		0.164	2A-UNC	0.070	5/8	5/64	0.094	2.6	6.6	-22	482	0.03	2B030.0166
#10-32		0.190	2A-UNF	0.093	3/4	3/32	0.125	3.2	9.0	-22	482	0.06	2B030.0170
1/4-20	1/4	0.250	2A-UNC	0.119	1	1/8	0.188	3.1	10.1	-22	482	0.12	2B030.0172

[1] statistical average value

chanhvinh.com

Dimensions						WS	Stroke s	Spring load[1]					Art. No.
d_1			Thread	d_2	l			F_1 ~	F_2 ~	min.	max.		
	[in]			[in]		[in]	[in]	[lb]		[°F]		[oz]	
1/4-28	1/4	0.250	2A-UNF	0.119	1	1/8	0.188	3.1	10.1	-22	482	0.14	2B030.0174
5/16-18	5/16	0.313	2A-UNC	0.135	1	5/32	0.188	3.0	15.0	-22	482	0.17	2B030.0176
3/8-16	3/8	0.375	2A-UNC	0.186	1 1/8	3/16	0.188	5.5	12.7	-22	482	0.33	2B030.0178
1/2-13	1/2	0.500	2A-UNC	0.248	1 1/4	1/4	0.250	6.6	16.0	-22	482	0.65	2B030.0180
5/8-11	5/8	0.625	2A-UNC	0.310	1 1/2	5/16	0.313	10.5	22.2	-22	482	1.28	2B030.0182
3/4-10	3/4	0.750	2A-UNC	0.374	1 3/4	3/8	0.313	6.7	33.0	-22	482	2.19	2B030.0183
1-8	1	0.125	2A-UNC	0.499	2 13/32	3/8	0.500	16.0	60.0	-22	482	5.52	2B030.0184
stainless steel, heavy spring load, With thread lock													
#6-32		0.138	2A-UNC	0.046	17/32	1/16	0.063	1.5	3.4	-22	194	0.02	2B030.0363
#8-32		0.164	2A-UNC	0.070	5/8	5/64	0.094	2.6	6.6	-22	194	0.03	2B030.0366
#10-32		0.190	2A-UNF	0.093	3/4	3/32	0.125	3.2	9.0	-22	194	0.06	2B030.0370
1/4-20	1/4	0.250	2A-UNC	0.119	1	1/8	0.188	3.1	10.1	-22	194	0.13	2B030.0372
1/4-28	1/4	0.250	2A-UNF	0.119	1	1/8	0.188	3.1	10.1	-22	194	0.14	2B030.0374
5/16-18	5/16	0.313	2A-UNC	0.135	1	5/32	0.188	3.0	15.0	-22	194	0.21	2B030.0376
3/8-16	3/8	0.375	2A-UNC	0.186	1 1/8	3/16	0.188	5.5	12.7	-22	194	0.34	2B030.0378
1/2-13	1/2	0.500	2A-UNC	0.248	1 1/4	1/4	0.250	6.6	16.0	-22	194	0.64	2B030.0380
5/8-11	5/8	0.625	2A-UNC	0.310	1 1/2	5/16	0.313	10.5	22.2	-22	194	1.26	2B030.0382
3/4-10	3/4	0.750	2A-UNC	0.374	1 3/4	3/8	0.313	6.7	33.0	-22	194	2.20	2B030.0383
1-8	1	0.125	2A-UNC	0.499	2 13/32	3/8	0.500	16.0	60.0	-22	194	5.52	2B030.0384

[1] statistical average value

Application example

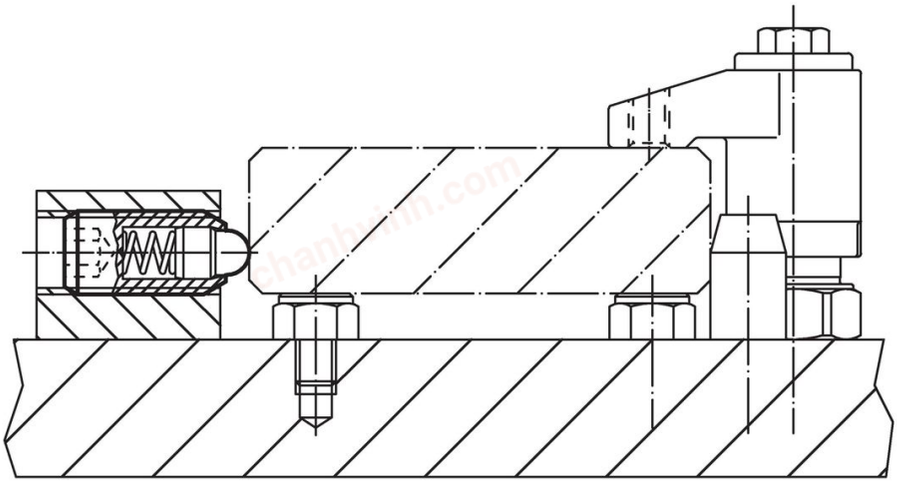

Compliance

For detailed compliance information please select the desired article number.