chanhvinh.com

Hinges • long version
EH 25165.



Product Description

The different versions cover many applications that require a low load.
These metal hinges are characterised by their simple design and the different versions:
- without bores
- with bores
- with bores for countersunk screws

The version without bores can be assembled by welding or by inserting a specific drilling pattern.

Material

Body
- Stainless steel 1.4301
- Steel, zinc-plated by galvanization, passivated

Axis
- Stainless steel 1.4301

Drawing

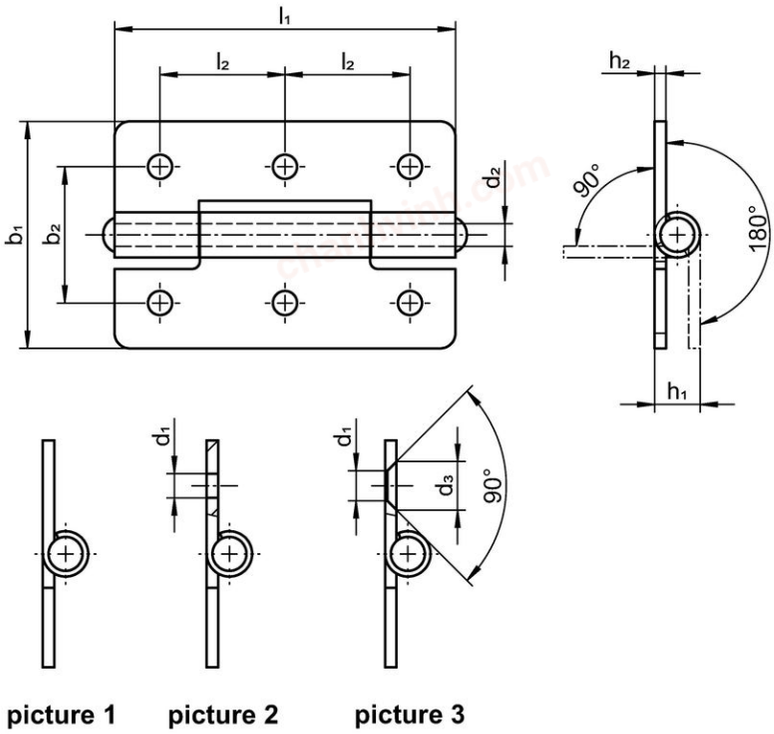

picture 1 **picture 2** **picture 3**

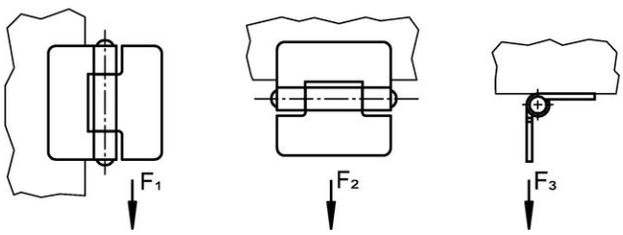

chanhvinh.com

Order information

Dimensions									Holding force				Art. No.
b_1	l_1	b_2	d_1	d_2	d_3	h_1 ~	h_2	l_2	F_1 ~	F_2 ~	F_3 ~		
[mm]									[N]			[g]	
without bores – picture 1, Stainless steel													
30	**45**	–	–	3	–	6	1.5	–	1300	750	700	23	25165.0020
40	**60**	–	–	4	–	8	2.0	–	2400	1500	1300	55	25165.0030
50	**75**	–	–	6	–	10	2.0	–	2500	2250	1300	94	25165.0045
60	**90**	–	–	6	–	10	2.0	–	3000	3000	1200	127	25165.0065
with bores – picture 2, Stainless steel													
30	**45**	18	3.2	3	–	6	1.5	16.5	1300	750	700	22	25165.0120
40	**60**	25	4.2	4	–	8	2.0	22.5	2400	1500	1300	53	25165.0130
50	**75**	30	5.2	6	–	10	2.0	27.5	2500	2250	1300	92	25165.0145
60	**90**	36	5.2	6	–	10	2.0	33.0	3000	3000	1200	125	25165.0165
with bores – picture 2, Steel													
30	**45**	18	3.2	3	–	6	1.5	16.5	1300	750	700	22	25165.1020
40	**60**	25	4.2	4	–	8	2.0	22.5	2400	1500	1300	53	25165.1030
50	**75**	30	5.2	6	–	10	2.0	27.5	2500	2250	1300	91	25165.1045
60	**90**	36	5.2	6	–	10	2.0	33.0	3000	3000	1200	125	25165.1065
with bores for countersunk screws – picture 3, Stainless steel													
30	**45**	18	4.0	3	6.4	6	1.5	16.5	1300	750	700	22	25165.0220
40	**60**	25	5.0	4	8.3	8	2.0	22.5	2400	1500	1300	52	25165.0230
50	**75**	30	5.0	6	8.3	10	2.0	27.5	2500	2250	1300	89	25165.0245
60	**90**	36	5.0	6	8.3	10	2.0	33.0	3000	3000	1200	126	25165.0265
with bores for countersunk screws – picture 3, Steel													
30	**45**	18	4.0	3	6.4	6	1.5	16.5	1300	750	700	22	25165.2020
40	**60**	25	5.0	4	8.3	8	2.0	22.5	2400	1500	1300	52	25165.2030
50	**75**	30	5.0	6	8.3	10	2.0	27.5	2500	2250	1300	92	25165.2045
60	**90**	36	5.0	6	8.3	10	2.0	33.0	3000	3000	1200	125	25165.2065

Compliance

RoHS-compliant
Compliant with Directive 2011/65/EU [RoHS].

Does not contain SVHC substances
No SVHC substances with more than 0.1% w/w contained - SVHC list [REACH] as of 04.02.2026.

SCIP-code
N/A

Does not contain Proposition 65 substances
No Proposition 65 substances included.
https://www.P65Warnings.ca.gov/

Free from Conflict Minerals
This product does not contain any substances designated as "conflict minerals" such as tantalum, tin, gold or tungsten from the Democratic Republic of Congo or adjacent countries.

POP-compliant
Contains no persistent organic pollutants – Stockholm Convention [POP] as of September 2025.

PFAS-compliant
Contains no per- and polyfluoroalkyl substances (PFAS).

TSCA-compliant
Agent concentration in this product does not exceed the specified threshold.