chanhvinh.com

Hinges • elongated on both sides
EH 25165.



Product Description

The different versions cover many applications that require a low load.
These metal hinges are characterised by their simple design and the different versions:
- without bores
- with bores
- with bores for countersunk screws

The version without bores can be assembled by welding or by inserting a specific drilling pattern.

Material

Body
- Stainless steel 1.4301
- Steel, zinc-plated by galvanization, passivated

Axis
- Stainless steel 1.4301

Drawing

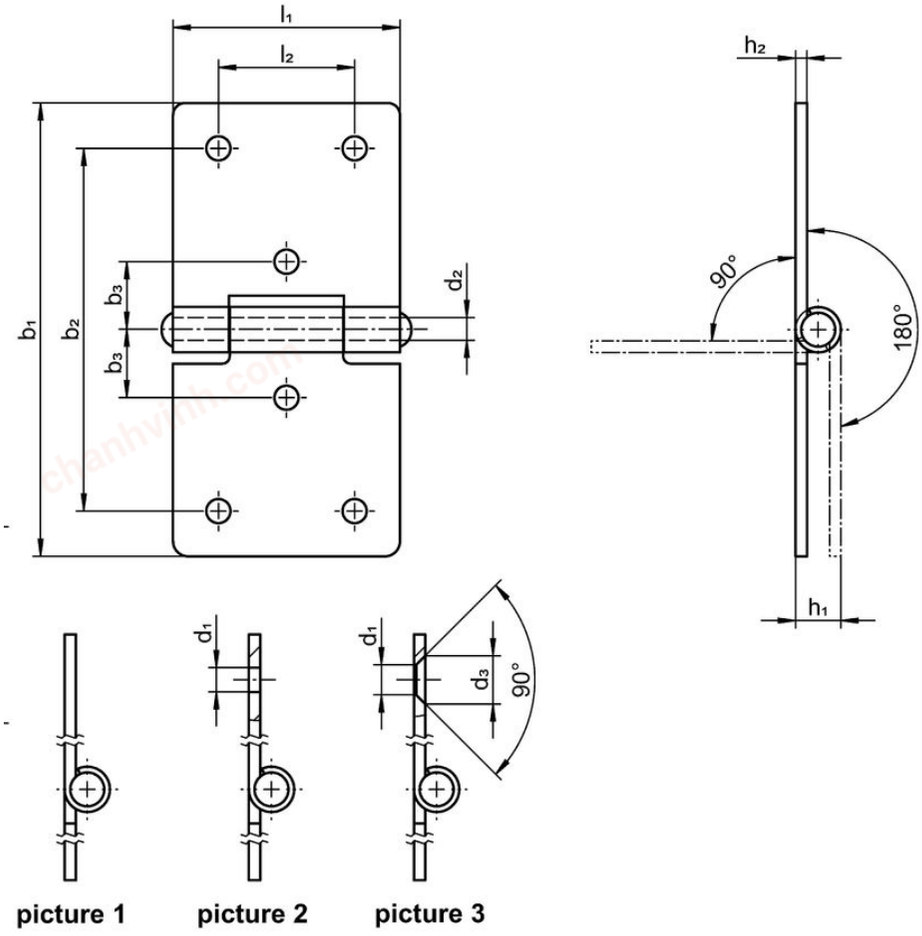

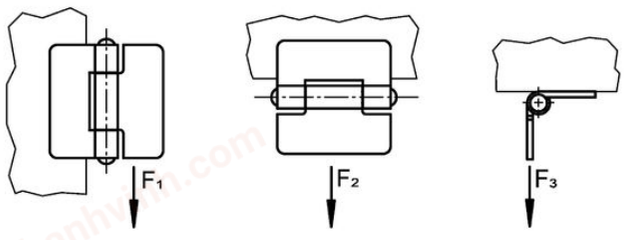

chanhvinh.com

Order information

Dimensions										Holding force				Art. No.
b_1	l_1	b_2	b_3	d_1	d_2	d_3	h_1 ~	h_2	l_2	F_1 ~	F_2 ~	F_3 ~		
[mm]										[N]			[g]	
without bores – picture 1, Stainless steel														
60	**30**	–	–	–	3	–	6	1.5	–	700	500	450	25	25165.0050
80	**40**	–	–	–	4	–	8	2.0	–	1200	1000	1000	59	25165.0075
100	**50**	–	–	–	6	–	10	2.0	–	1200	1600	700	102	25165.0005
120	**60**	–	–	–	6	–	10	2.0	–	1100	2500	1000	142	25165.0010
with bores – picture 2, Stainless steel														
60	**30**	48	9.0	3.2	3	–	6	1.5	18	700	500	450	24	25165.0150
80	**40**	65	12.5	4.2	4	–	8	2.0	25	1200	1000	1000	59	25165.0175
100	**50**	80	15.0	5.2	6	–	10	2.0	30	1200	1600	700	100	25165.0105
120	**60**	96	18.0	5.2	6	–	10	2.0	36	1100	2500	1000	139	25165.0110
with bores – picture 2, Steel														
60	**30**	48	9.0	3.2	3	–	6	1.5	18	700	500	450	24	25165.1050
80	**40**	65	12.5	4.2	4	–	8	2.0	25	1200	1000	1000	59	25165.1075
100	**50**	80	15.0	5.2	6	–	10	2.0	30	1200	1600	700	100	25165.1005
120	**60**	96	18.0	5.2	6	–	10	2.0	36	1100	2500	1000	138	25165.1010
with bores for countersunk screws – picture 3, Stainless steel														
60	**30**	48	9.0	4.0	3	6.4	6	1.5	18	700	500	450	24	25165.0250
80	**40**	65	12.5	5.0	4	8.3	8	2.0	25	1200	1000	1000	56	25165.0275
100	**50**	80	15.0	5.0	6	8.3	10	2.0	30	1200	1600	700	96	25165.0205
120	**60**	96	18.0	5.0	6	8.3	10	2.0	36	1100	2500	1000	140	25165.0210
with bores for countersunk screws – picture 3, Steel														
60	**30**	48	9.0	4.0	3	6.4	6	1.5	18	700	500	450	24	25165.2050
80	**40**	65	12.5	5.0	4	8.3	8	2.0	25	1200	1000	1000	58	25165.2075
100	**50**	80	15.0	5.0	6	8.3	10	2.0	30	1200	1600	700	99	25165.2005
120	**60**	96	18.0	5.0	6	8.3	10	2.0	36	1100	2500	1000	139	25165.2010

Compliance

RoHS-compliant
Compliant with Directive 2011/65/EU [RoHS].

Does not contain SVHC substances
No SVHC substances with more than 0.1% w/w contained - SVHC list [REACH] as of 04.02.2026.

SCIP-code
N/A

Does not contain Proposition 65 substances
No Proposition 65 substances included.
https://www.P65Warnings.ca.gov/

Free from Conflict Minerals
This product does not contain any substances designated as "conflict minerals" such as tantalum, tin, gold or tungsten from the Democratic Republic of Congo or adjacent countries.

POP-compliant
Contains no persistent organic pollutants – Stockholm Convention [POP] as of September 2025.

PFAS-compliant
Contains no per- and polyfluoroalkyl substances (PFAS).

TSCA-compliant
Agent concentration in this product does not exceed the specified threshold.