chanhvinh.com

Hinges • elongated on one side
EH 25165.



Product Description

The different versions cover many applications that require a low load.
These metal hinges are characterised by their simple design and the different versions:
- without bores
- with bores
- with bores for countersunk screws

The version without bores can be assembled by welding or by inserting a specific drilling pattern.

Material

Body
- Stainless steel 1.4301
- Steel, zinc-plated by galvanization, passivated

Axis
- Stainless steel 1.4301

Drawing

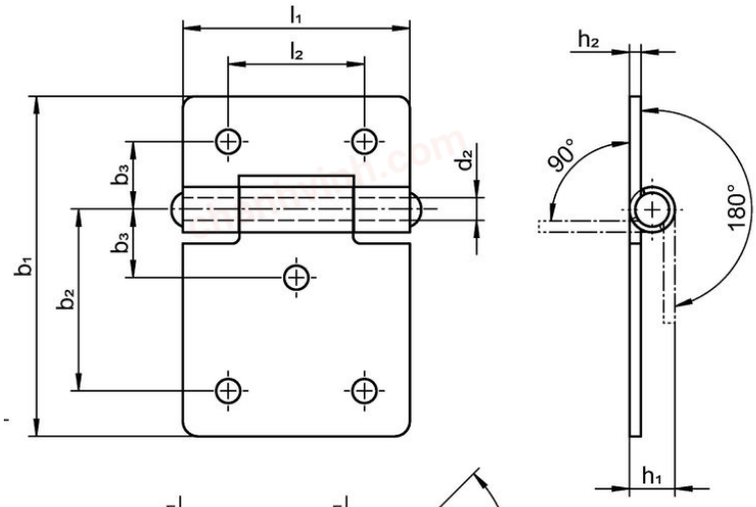

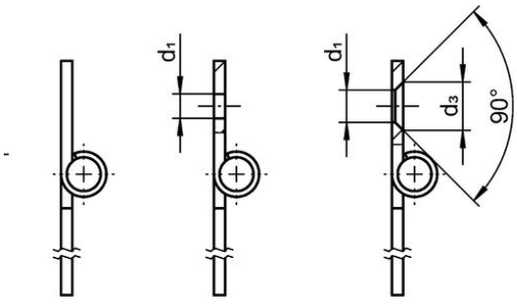

picture 1 picture 2 picture 3

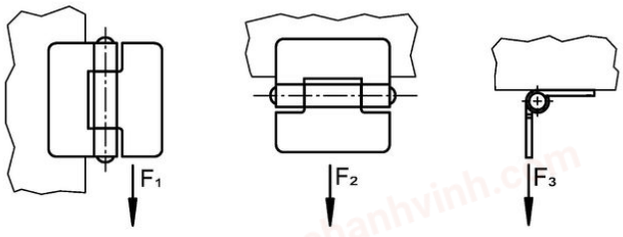

chanhvinh.com

Order information

Dimensions										Holding force				Art. No.
b_1	l_1	b_2	b_3	d_1	d_2	d_3	h_1 ~	h_2	l_2	F_1 ~	F_2 ~	F_3 ~		
[mm]										[N]			[g]	
without bores – picture 1, Stainless steel														
45	**30**	–	–	–	3	–	6	1.5	–	700	500	450	20	25165.0035
60	**40**	–	–	–	4	–	8	2.0	–	1200	1000	1000	48	25165.0055
75	**50**	–	–	–	6	–	10	2.0	–	1600	2000	1000	80	25165.0070
90	**60**	–	–	–	6	–	10	2.0	–	1100	2500	1000	114	25165.0080
with bores – picture 2, Stainless steel														
45	**30**	24.0	9.0	3.2	3	–	6	1.5	18	700	500	450	20	25165.0135
60	**40**	32.5	12.5	4.2	4	–	8	2.0	18	1200	1000	1000	46	25165.0155
75	**50**	40.0	15.0	5.2	6	–	10	2.0	30	1600	2000	1000	80	25165.0170
90	**60**	48.0	18.0	5.2	6	–	10	2.0	36	1100	2500	1000	112	25165.0180
with bores – picture 2, Steel														
45	**30**	24.0	9.0	3.2	3	–	6	1.5	18	700	500	450	20	25165.1035
60	**40**	32.5	12.5	4.2	4	–	8	2.0	25	1200	1000	1000	46	25165.1055
75	**50**	40.0	15.0	5.2	6	–	10	2.0	30	1600	2000	1000	83	25165.1070
90	**60**	48.0	18.0	5.2	6	–	10	2.0	36	1100	2500	1000	111	25165.1080
with bores for countersunk screws – picture 3, Stainless steel														
45	**30**	24.0	9.0	4.0	3	6.4	6	1.5	18	700	500	450	19	25165.0235
60	**40**	32.5	12.5	5.0	4	8.3	8	2.0	25	1200	1000	1000	46	25165.0255
75	**50**	40.0	15.0	5.0	6	8.3	10	2.0	30	1600	2000	1000	78	25165.0270
90	**60**	48.0	18.0	5.0	6	8.3	10	2.0	36	1100	2500	1000	108	25165.0280
with bores for countersunk screws – picture 3, Steel														
45	**30**	24.0	9.0	4.0	3	6.4	6	1.5	18	700	500	450	19	25165.2035
60	**40**	32.5	12.5	5.0	4	8.3	8	2.0	25	1200	1000	1000	45	25165.2055
75	**50**	40.0	15.0	5.0	6	8.3	10	2.0	30	1600	2000	1000	79	25165.2070
90	**60**	48.0	18.0	5.0	6	8.3	10	2.0	36	1100	2500	1000	111	25165.2080

Compliance

RoHS-compliant
Compliant with Directive 2011/65/EU [RoHS].

Does not contain SVHC substances
No SVHC substances with more than 0.1% w/w contained - SVHC list [REACH] as of 04.02.2026.

SCIP-code
N/A

Does not contain Proposition 65 substances
No Proposition 65 substances included.
https://www.P65Warnings.ca.gov/

Free from Conflict Minerals
This product does not contain any substances designated as "conflict minerals" such as tantalum, tin, gold or tungsten from the Democratic Republic of Congo or adjacent countries.

POP-compliant
Contains no persistent organic pollutants – Stockholm Convention [POP] as of September 2025.

PFAS-compliant
Contains no per- and polyfluoroalkyl substances (PFAS).

TSCA-compliant
Agent concentration in this product does not exceed the specified threshold.