chanhvinh.com

Hinges • with mounting thread
EH 25160.



Product Description

These hinges are characterised by the compact, robust design and the integrated mounting threads.

Material

Grub Screw
- Stainless steel

Body
- Zinc die-cast, chromed
- Zinc die-cast, plastic coated, silver, similar to RAL 9006, matt structure
- Zinc die-cast, plastic coated, black, similar to RAL 9005, matt structure
- Stainless steel 1.4308

Axis
- Stainless steel

More information

Further products

- Spacer Plates, for hinges

Drawing

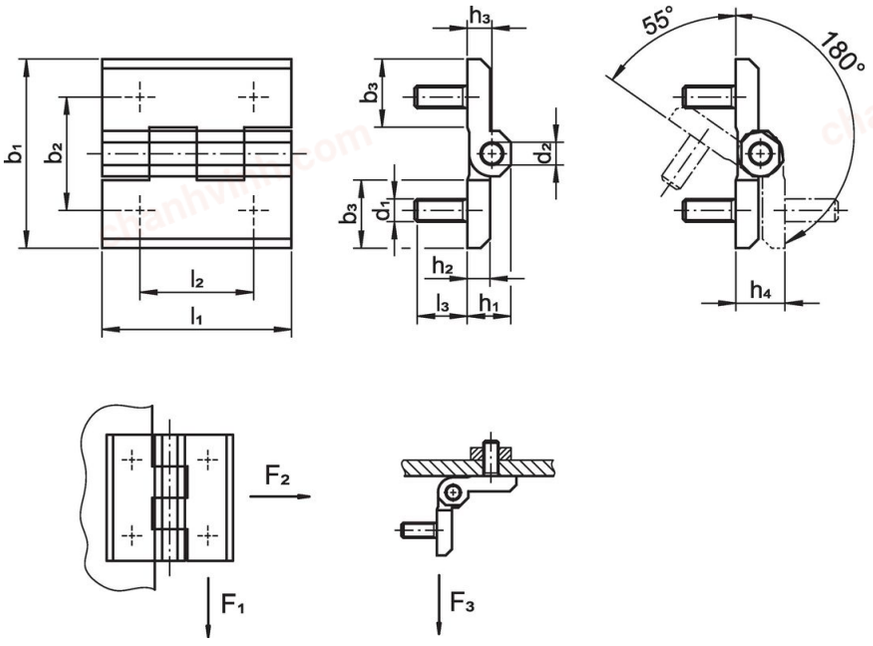

Order information

Dimensions												Holding force				Art. No.
b_1	b_2	b_3	d_1	d_2	h_1	h_2	h_3	h_4 +0.5	l_1	l_2	l_3	F_1	F_2	F_3		
[mm]												[N]			[g]	
Zinc die-cast, chromed																
40	25	14.0	M5	4	9.0	5	5.5	11	40	25	12	900	1700	1900	61	25160.0050
50	30	18.5	M6	6	11.5	6	6.5	13	50	30	12	2000	3500	2000	103	25160.0055
60	36	21.5	M8	8	15.0	8	8.5	17	60	36	14	3000	4000	2500	194	25160.0060
Zinc die-cast, silver																
40	25	14.0	M5	4	9.0	5	5.5	11	40	25	12	900	1700	1900	61	25160.0150
50	30	18.5	M6	6	11.5	6	6.5	13	50	30	12	2000	3500	2000	104	25160.0155
60	36	21.5	M8	8	15.0	8	8.5	17	60	36	14	3000	2500	4000	195	25160.0160
Zinc die-cast, black																
40	25	14.0	M5	4	9.0	5	5.5	11	40	25	12	900	1700	1900	61	25160.0250
50	30	18.5	M6	6	11.5	6	6.5	13	50	30	12	2000	2000	3500	104	25160.0255
60	36	21.5	M8	8	15.0	8	8.5	17	60	36	14	3000	2500	4000	185	25160.0260

chanhvinh.com

Dimensions												Holding force				Art. No.
b_1	b_2	b_3	d_1	d_2	h_1	h_2	h_3	h_4 +0.5	l_1	l_2	l_3	F_1	F_2	F_3		
[mm]												[N]			[g]	
Stainless steel																
40	25	14.0	M5	4	9.0	5	5.5	11	40	25	11	2000	2300	1000	68	25160.0350
50	30	18.5	M6	6	11.5	6	6.5	13	50	30	13	2000	2800	1300	128	25160.0355
60	36	21.5	M8	8	15.0	8	8.5	17	60	36	17	3900	4500	1500	252	25160.0360

Compliance

RoHS-compliant
Compliant with Directive 2011/65/EU [RoHS].

Does not contain SVHC substances
No SVHC substances with more than 0.1% w/w contained - SVHC list [REACH] as of 04.02.2026.

SCIP-code
N/A

Does not contain Proposition 65 substances
No Proposition 65 substances included.
https://www.P65Warnings.ca.gov/

Free from Conflict Minerals
This product does not contain any substances designated as "conflict minerals" such as tantalum, tin, gold or tungsten from the Democratic Republic of Congo or adjacent countries.

POP-compliant
Contains no persistent organic pollutants – Stockholm Convention [POP] as of September 2025.

PFAS-compliant
Contains no per- and polyfluoroalkyl substances (PFAS).

TSCA-compliant
Agent concentration in this product does not exceed the specified threshold.