chanhvinh.com

Spacer Plates • for hinges

EH 25160.



Product Description

Spacer plates are used for height compensation when installing hinges.

Material

- Stainless steel 1.4301, matt, vibratory ground

Drawing

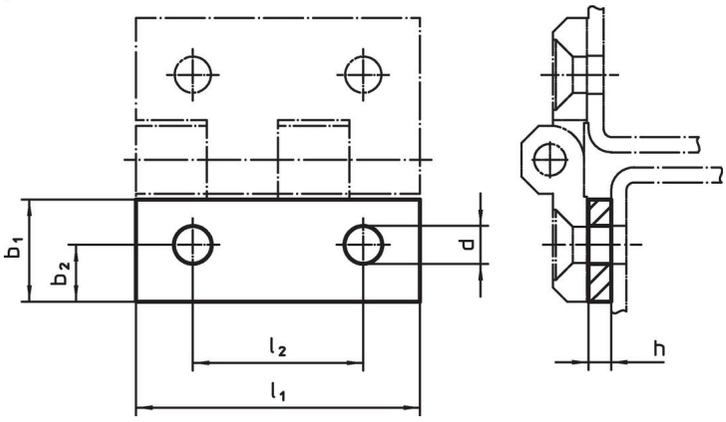

Order information

Dimensions							Art. No.
l_1	b_1	h	b_2	d	l_2	[g]	
		[mm]					
30	**10.8**	**1.0**	6.0	4	18	2.2	25160.0605
30	**10.8**	**1.5**	6.0	4	18	3.3	25160.0610
30	**10.8**	**3.0**	6.0	4	18	6.5	25160.0615
30	**10.8**	**5.0**	6.0	4	18	11.0	25160.0620
40	**14.5**	**1.0**	7.5	5	25	4.3	25160.0625
40	**14.5**	**1.5**	7.5	5	25	6.4	25160.0630
40	**14.5**	**3.0**	7.5	5	25	12.0	25160.0635
40	**14.5**	**5.0**	7.5	5	25	20.0	25160.0640
50	**18.0**	**1.0**	10.0	6	30	6.6	25160.0645
50	**18.0**	**1.5**	10.0	6	30	9.8	25160.0650
50	**18.0**	**3.0**	10.0	6	30	19.0	25160.0655
50	**18.0**	**5.0**	10.0	6	30	31.0	25160.0660
60	**21.5**	**1.0**	12.5	8	36	9.2	25160.0665
60	**21.5**	**1.5**	12.5	8	36	14.0	25160.0670
60	**21.5**	**3.0**	12.5	8	36	27.0	25160.0675
60	**21.5**	**5.0**	12.5	8	36	44.0	25160.0680

chanhvinh.com

Compliance

RoHS-compliant
Compliant with Directive 2011/65/EU [RoHS].

Does not contain SVHC substances
No SVHC substances with more than 0.1% w/w contained - SVHC list [REACH] as of 04.02.2026.

SCIP-code
N/A

Does not contain Proposition 65 substances
No Proposition 65 substances included.
https://www.P65Warnings.ca.gov/

Free from Conflict Minerals
This product does not contain any substances designated as "conflict minerals" such as tantalum, tin, gold or tungsten from the Democratic Republic of Congo or adjacent countries.

POP-compliant
Contains no persistent organic pollutants – Stockholm Convention [POP] as of September 2025.

PFAS-compliant
Contains no per- and polyfluoroalkyl substances (PFAS).

TSCA-compliant
Agent concentration in this product does not exceed the specified threshold.