chanhvinh.com

Hinges • with adjustable friction resistance

EH 25160.



Product Description

These Hinges are characterised by their compact and stable construction, and by the ability to set the friction.
The design ensures that the hinge has no play (either radially or axially).

Material

Friction cone
- Thermoplastic POM

Body
- Zinc die-cast, plastic coated, silver, similar to RAL 9006, matt structure
- Zinc die-cast, plastic coated, black, similar to RAL 9005, matt structure

Hinge pin
- Steel, zinc-plated by galvanization, passivated

Nut
- Steel, zinc-plated by galvanization, passivated

Assembly

Installation of the hinge on the component. The hinge's ease of pivoting can then be adjusted by tightening or loosening the hinge pin. This allows a constant braking torque to be applied throughout the pivot range.

More information

Further products

- Spacer Plates, for hinges
- Threaded Plates, for hinges
- Stops, for hinges

Drawing

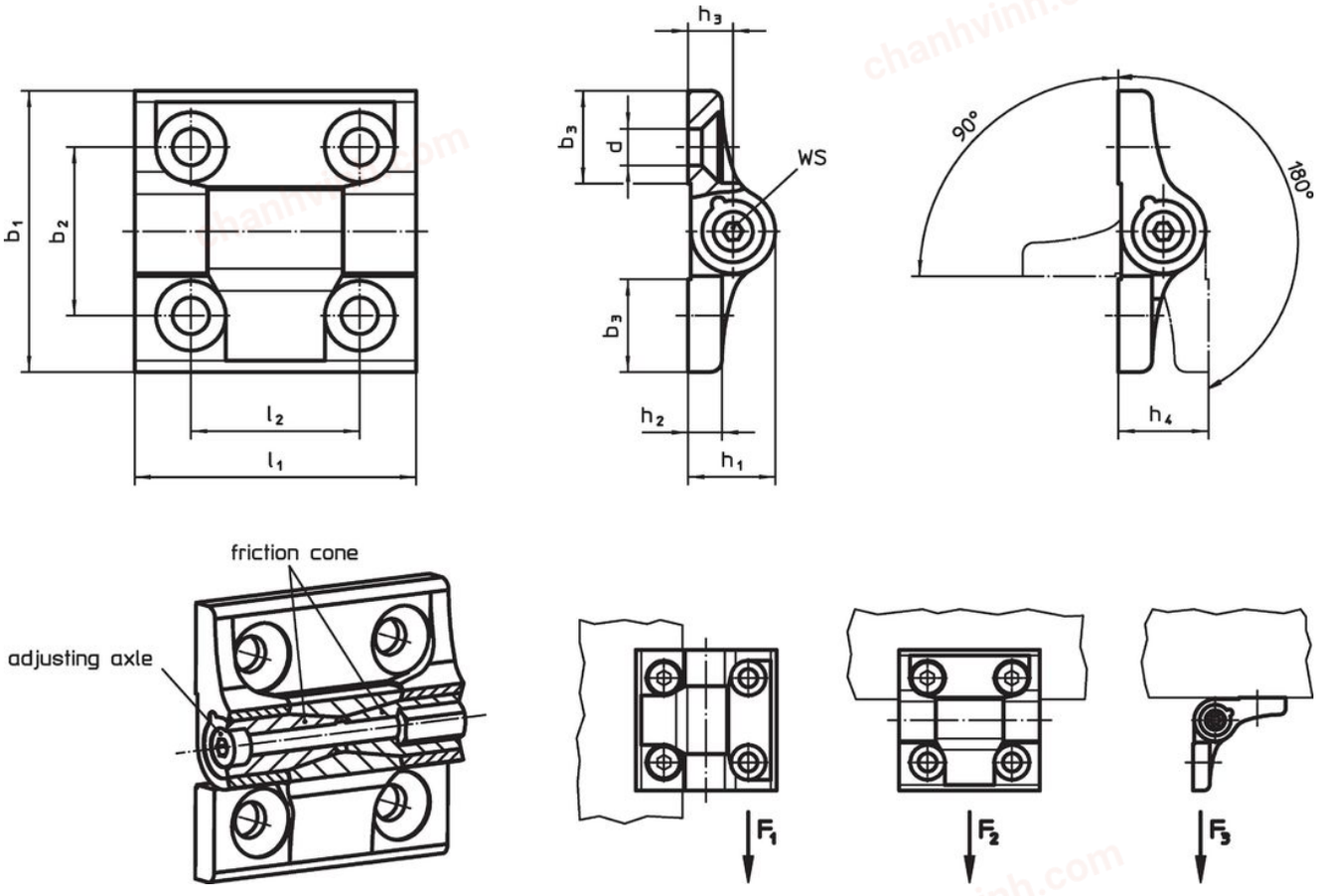

chanhvinh.com

Order information

Dimensions										WS	Load capacity			Hinge pin		Holding force					Art. No.
b_1	b_2	b_3	d	h_1	h_2	h_3	h_4	l_1	l_2		Radial load bearing capacity F_1 max.	Axial load bearing capacity F_2 max.	Load capacity F_3 max.	Tightening torque max.	Friction torque	F_1	F_2	F_3	max.		
[mm]										[mm]	[kN]			[Nm]		[N]			[°C]	[g]	
silver																					
40	25	13.0	5.3	13.5	5.0	7.0	14	40	25	2.5	2.4	1.2	1.5	0.50	2.0	1200	2500	1500	80	55	25160.0400
50	30	16.5	6.5	15.5	6.0	8.0	16	50	30	3.0	3.2	1.6	2.0	0.75	4.0	1600	3200	2000	80	94	25160.0405
60	36	20.0	8.3	18.5	7.5	9.5	19	60	36	4.0	4.5	2.0	2.4	1.50	6.5	2000	4500	2400	80	162	25160.0410
black																					
40	25	13.0	5.3	13.5	5.0	7.0	14	40	25	2.5	2.4	1.2	1.5	0.50	2.0	1200	2500	1500	80	55	25160.0500
50	30	16.5	6.5	15.5	6.0	8.0	16	50	30	3.0	3.2	1.6	2.0	0.75	4.0	1600	3200	2000	80	94	25160.0505
60	36	20.0	8.3	18.5	7.5	9.5	19	60	36	4.0	4.5	2.0	2.4	1.50	6.5	2000	4500	2400	80	162	25160.0510

Compliance

For detailed compliance information please select the desired article number.

chanhvinh.com