chanhvinh.com

Silicone Endstop Buffers • truncated cone form

EH 25151.



Product Description

Because of the high material purity, this version is suitable for all types of application which have demanding hygienic requirements (e.g. food industry).
To be used as an elastic end-stop, bearing foot etc.
Endstop buffers made from silicone rubber have a wider temperature range for use than rubber endstop buffers.
The hardness is 55 ±5° Shore A. Further shore hardnesses (40 ±5° Shore A and 70 ±5° Shore A) on request.

Material

Support washer
- Stainless steel 1.4301

Threaded bushing
- Stainless steel 1.4301

Body
- Silicone rubber

Screw
- Stainless steel 1.4301

More information

Further products

- Rubber Endstop Buffers, truncated cone form

Drawing

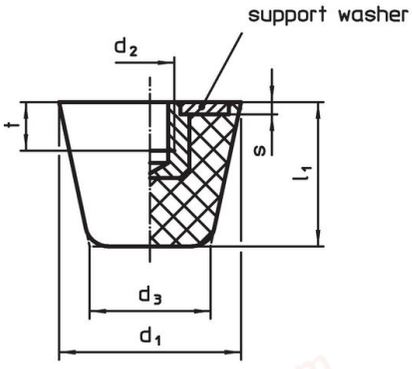

picture 1

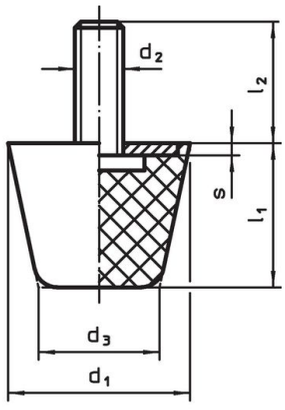

picture 2

Order information

Dimensions							Spring rate R ~	Load capacity max.	Spring range ~	min.	max.		Art. No.
d_1	d_2	l_2	d_3	l_1	s	t	[N/mm]	[N]	[mm]	[°C]		[g]	
with female thread – picture 1													
19	**M 5**	**–**	12.0	16.0	2	5	63	250	4.0	-30	200	6.1	25151.0019
25	**M 6**	**–**	16.5	20.5	2	6	90	460	5.1	-30	200	13.0	25151.0025
32	**M 8**	**–**	21.0	26.0	2	8	117	760	6.5	-30	200	23.0	25151.0032
38	**M 8**	**–**	24.5	32.0	2	8	113	900	8.0	-30	200	38.0	25151.0038
50	**M10**	**–**	32.0	43.0	2	10	148	1580	10.7	-30	200	94.0	25151.0050
with screw – picture 2													
19	**M 5**	**6**	12.0	16.0	2	–	63	250	4.0	-30	200	7.5	25151.0119
19	**M 5**	**10**	12.0	16.0	2	–	63	250	4.0	-30	200	8.0	25151.0120
19	**M 5**	**20**	12.0	16.0	2	–	63	250	4.0	-30	200	9.2	25151.0121
25	**M 6**	**8**	16.5	20.5	2	–	90	460	5.1	-30	200	16.0	25151.0125
25	**M 6**	**12**	16.5	20.5	2	–	90	460	5.1	-30	200	17.0	25151.0126
25	**M 6**	**25**	16.5	20.5	2	–	90	460	5.1	-30	200	19.0	25151.0127
32	**M 8**	**10**	21.0	26.0	2	–	117	760	6.5	-30	200	30.0	25151.0132
32	**M 8**	**16**	21.0	26.0	2	–	117	760	6.5	-30	200	32.0	25151.0133
32	**M 8**	**30**	21.0	26.0	2	–	117	760	6.5	-30	200	36.0	25151.0134
38	**M 8**	**10**	24.5	32.0	2	–	113	900	8.0	-30	200	44.0	25151.0138

chanhvinh.com

Dimensions							Spring rate R ~	Load capacity max.	Spring range ~	min.	max.		Art. No.
d_1	d_2	l_2	d_3	l_1	s	t	[N/mm]	[N]	[mm]	[°C]		[g]	
38	**M 8**	**16**	24.5	32.0	2	–	113	900	8.0	-30	200	46.0	25151.0139
38	**M 8**	**30**	24.5	32.0	2	–	113	900	8.0	-30	200	50.0	25151.0140
50	**M10**	**12**	32.0	43.0	2	–	148	1580	10.7	-30	200	95.0	25151.0150
50	**M10**	**20**	32.0	43.0	2	–	148	1580	10.7	-30	200	99.0	25151.0151
50	**M10**	**40**	32.0	43.0	2	–	148	1580	10.7	-30	200	108.0	25151.0152

Compliance

RoHS-compliant
Compliant with Directive 2011/65/EU [RoHS].

Does not contain SVHC substances
No SVHC substances with more than 0.1% w/w contained - SVHC list [REACH] as of 04.02.2026.

SCIP-code
N/A

Does not contain Proposition 65 substances
No Proposition 65 substances included.
https://www.P65Warnings.ca.gov/

Free from Conflict Minerals
This product does not contain any substances designated as "conflict minerals" such as tantalum, tin, gold or tungsten from the Democratic Republic of Congo or adjacent countries.

POP-compliant
Contains no persistent organic pollutants – Stockholm Convention [POP] as of September 2025.

PFAS-compliant
Contains no per- and polyfluoroalkyl substances (PFAS).

TSCA-compliant
Agent concentration in this product does not exceed the specified threshold.